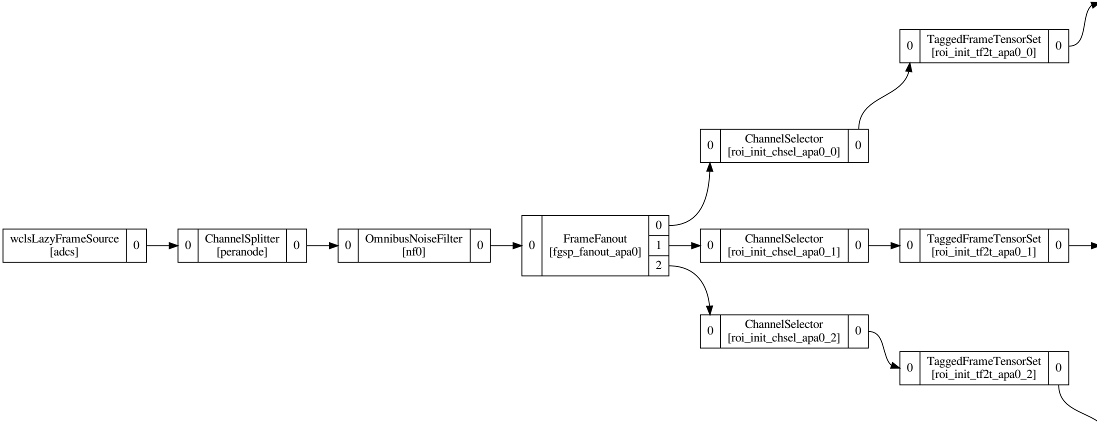
wclsLazyFrameSource
[adcs]
0
0
ChannelSplitter
[peranode]
0
0
OmnibusNoiseFilter
[nf0]
0
0
FrameFanout
[fgsp_fanout_apa0]
0
1
2
0
ChannelSelector
[roi_init_chsel_apa0_0]
0
0
TaggedFrameTensorSet
[roi_init_tf2t_apa0_0]
0
0
ChannelSelector
[roi_init_chsel_apa0_1]
0
0
TaggedFrameTensorSet
[roi_init_tf2t_apa0_1]
0
0
ChannelSelector
[roi_init_chsel_apa0_2]
0
0
TaggedFrameTensorSet
[roi_init_tf2t_apa0_2]
0

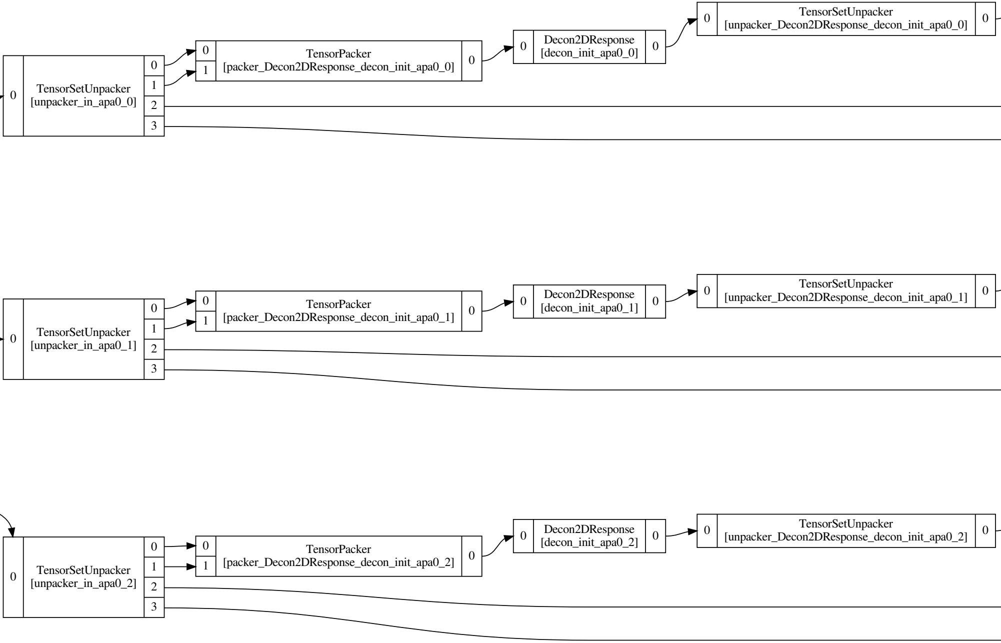
TensorSetUnpacker
[unpacker_in_apa0_0]
TensorPacker
[packer_Decon2DResponse_decon_init_apa0_0]
Decon2DResponse
[decon_init_apa0_0]
TensorSetUnpacker
[unpacker_Decon2DResponse_decon_init_apa0_0]
TensorSetUnpacker
[unpacker_in_apa0_1]
TensorPacker
[packer_Decon2DResponse_decon_init_apa0_1]
Decon2DResponse
[decon_init_apa0_1]
TensorSetUnpacker
[unpacker_Decon2DResponse_decon_init_apa0_1]
TensorSetUnpacker
[unpacker_in_apa0_2]
TensorPacker
[packer_Decon2DResponse_decon_init_apa0_2]
Decon2DResponse
[decon_init_apa0_2]
TensorSetUnpacker
[unpacker_Decon2DResponse_decon_init_apa0_2]

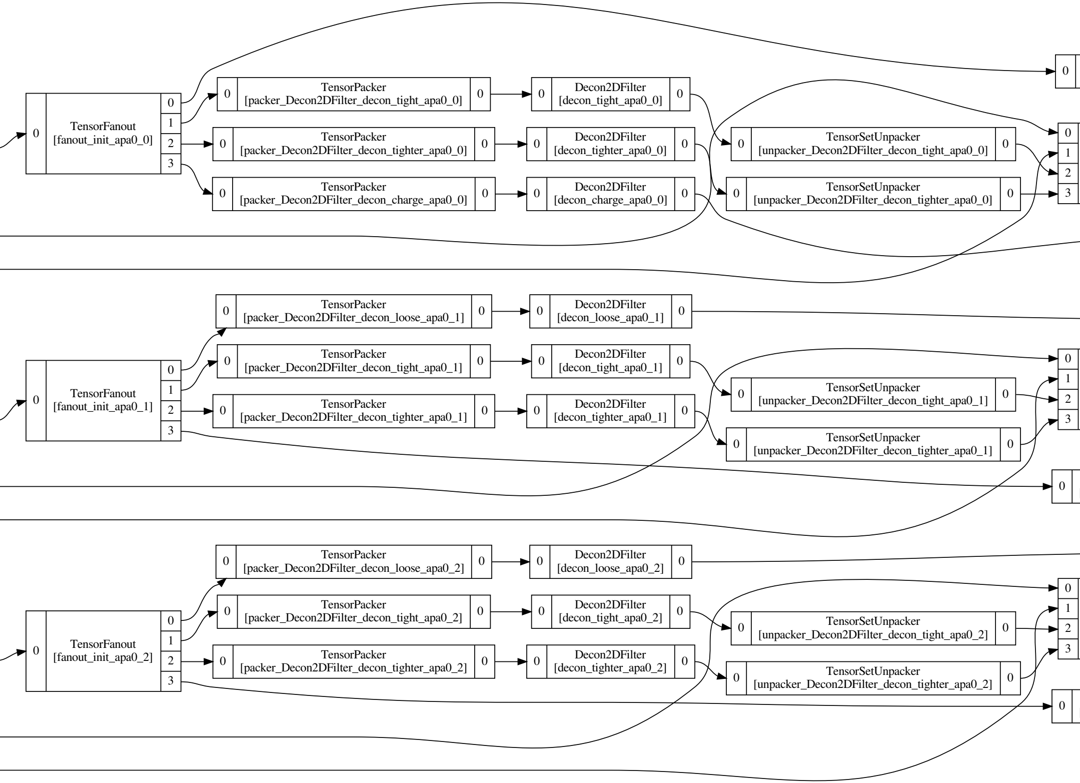
0
TensorFanout
[fanout_init_apa0_0]
0
1
2
3
0
TensorPacker
[packer_Decon2DFilter_decon_tight_apa0_0]
0
0
Decon2DFilter
[decon_tight_apa0_0]
0
0
TensorPacker
[packer_Decon2DFilter_decon_tighter_apa0_0]
0
0
Decon2DFilter
[decon_tighter_apa0_0]
0
0
TensorPacker
[packer_Decon2DFilter_decon_charge_apa0_0]
0
0
Decon2DFilter
[decon_charge_apa0_0]
0
0
TensorSetUnpacker
[unpacker_Decon2DFilter_decon_tight_apa0_0]
0
0
TensorSetUnpacker
[unpacker_Decon2DFilter_decon_tighter_apa0_0]
0
0
0
1
2
3
0
TensorFanout
[fanout_init_apa0_1]
0
1
2
3
0
TensorPacker
[packer_Decon2DFilter_decon_loose_apa0_1]
0
0
Decon2DFilter
[decon_loose_apa0_1]
0
0
TensorPacker
[packer_Decon2DFilter_decon_tight_apa0_1]
0
0
Decon2DFilter
[decon_tight_apa0_1]
0
0
TensorPacker
[packer_Decon2DFilter_decon_tighter_apa0_1]
0
0
Decon2DFilter
[decon_tighter_apa0_1]
0
0
TensorSetUnpacker
[unpacker_Decon2DFilter_decon_tight_apa0_1]
0
0
TensorSetUnpacker
[unpacker_Decon2DFilter_decon_tighter_apa0_1]
0
0
1
2
3
0
0
TensorFanout
[fanout_init_apa0_2]
0
1
2
3
0
TensorPacker
[packer_Decon2DFilter_decon_loose_apa0_2]
0
0
Decon2DFilter
[decon_loose_apa0_2]
0
0
TensorPacker
[packer_Decon2DFilter_decon_tight_apa0_2]
0
0
Decon2DFilter
[decon_tight_apa0_2]
0
0
TensorPacker
[packer_Decon2DFilter_decon_tighter_apa0_2]
0
0
Decon2DFilter
[decon_tighter_apa0_2]
0
0
TensorSetUnpacker
[unpacker_Decon2DFilter_decon_tight_apa0_2]
0
0
TensorSetUnpacker
[unpacker_Decon2DFilter_decon_tighter_apa0_2]
0
0
1
2
3
0

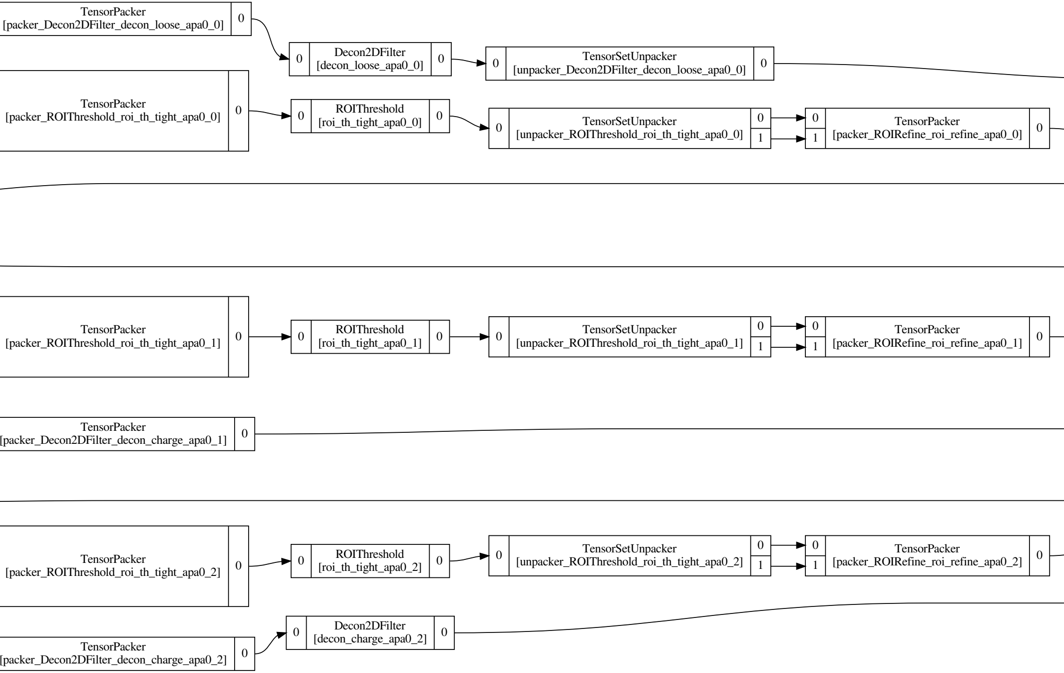
TensorPacker
[packer_Decon2DFilter_decon_loose_apa0_0]
0
0
Decon2DFilter
[decon_loose_apa0_0]
0
0
TensorSetUnpacker
[unpacker_Decon2DFilter_decon_loose_apa0_0]
0
TensorPacker
[packer_ROIThreshold_roi_th_tight_apa0_0]
0
0
ROIThreshold
[roi_th_tight_apa0_0]
0
0
TensorSetUnpacker
[unpacker_ROIThreshold_roi_th_tight_apa0_0]
0
1
0
1
TensorPacker
[packer_ROIRefine_roi_refine_apa0_0]
0
TensorPacker
[packer_ROIThreshold_roi_th_tight_apa0_1]
0
0
ROIThreshold
[roi_th_tight_apa0_1]
0
0
TensorSetUnpacker
[unpacker_ROIThreshold_roi_th_tight_apa0_1]
0
1
0
1
TensorPacker
[packer_ROIRefine_roi_refine_apa0_1]
0
TensorPacker
[packer_Decon2DFilter_decon_charge_apa0_1]
0
TensorPacker
[packer_ROIThreshold_roi_th_tight_apa0_2]
0
0
ROIThreshold
[roi_th_tight_apa0_2]
0
0
TensorSetUnpacker
[unpacker_ROIThreshold_roi_th_tight_apa0_2]
0
1
0
1
TensorPacker
[packer_ROIRefine_roi_refine_apa0_2]
0
TensorPacker
[packer_Decon2DFilter_decon_charge_apa0_2]
0
0
Decon2DFilter
[decon_charge_apa0_2]
0

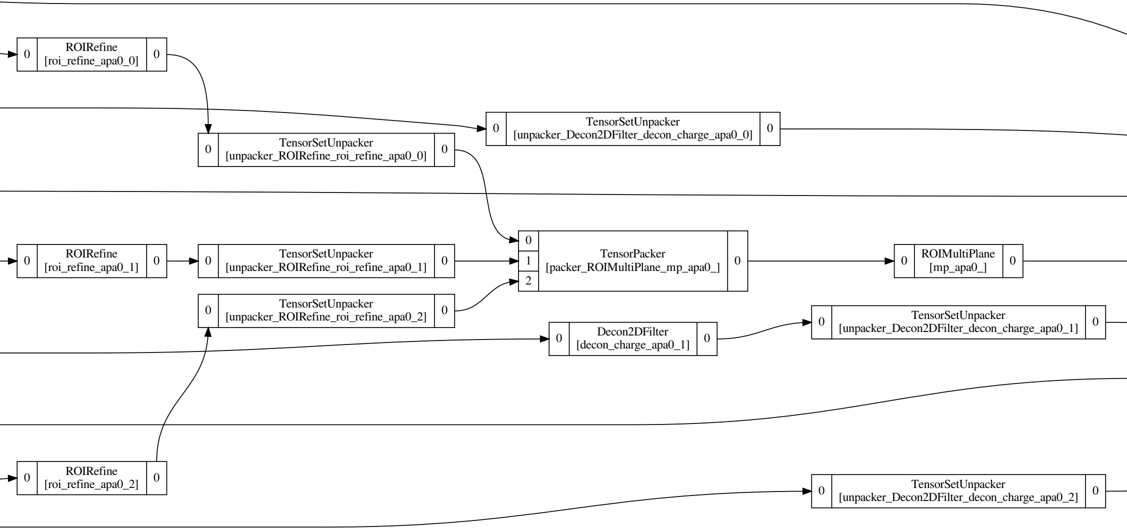
0
ROIRefine
[roi_refine_apa0_0]
0
0
TensorSetUnpacker
[unpacker_Decon2DFilter_decon_charge_apa0_0]
0
0
TensorSetUnpacker
[unpacker_ROIRefine_roi_refine_apa0_0]
0
0
1
2
TensorPacker
[packer_ROIMultiPlane_mp_apa0_]
0
0
ROIMultiPlane
[mp_apa0_]
0
0
ROIRefine
[roi_refine_apa0_1]
0
0
TensorSetUnpacker
[unpacker_ROIRefine_roi_refine_apa0_1]
0
0
TensorSetUnpacker
[unpacker_ROIRefine_roi_refine_apa0_2]
0
0
Decon2DFilter
[decon_charge_apa0_1]
0
0
TensorSetUnpacker
[unpacker_Decon2DFilter_decon_charge_apa0_1]
0
0
ROIRefine
[roi_refine_apa0_2]
0
0
TensorSetUnpacker
[unpacker_Decon2DFilter_decon_charge_apa0_2]
0

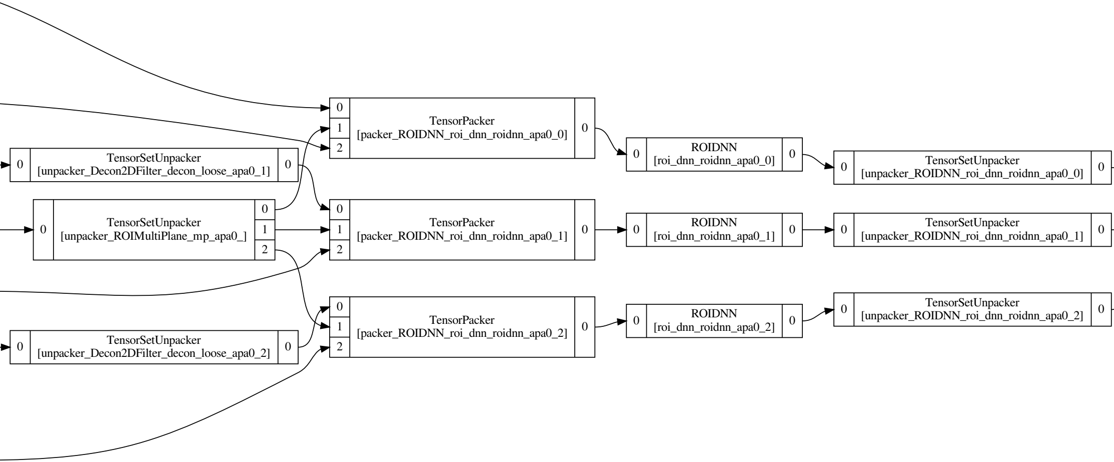
0
TensorSetUnpacker
[unpacker_Decon2DFilter_decon_loose_apa0_1]
0
0
TensorSetUnpacker
[unpacker_ROIMultiPlane_mp_apa0_]
0
1
2
0
TensorSetUnpacker
[unpacker_Decon2DFilter_decon_loose_apa0_2]
0
0
1
2
TensorPacker
[packer_ROIDNN_roi_dnn_roidnn_apa0_0]
0
0
1
2
TensorPacker
[packer_ROIDNN_roi_dnn_roidnn_apa0_1]
0
0
1
2
TensorPacker
[packer_ROIDNN_roi_dnn_roidnn_apa0_2]
0
0
ROIDNN
[roi_dnn_roidnn_apa0_0]
0
0
ROIDNN
[roi_dnn_roidnn_apa0_1]
0
0
ROIDNN
[roi_dnn_roidnn_apa0_2]
0
0
TensorSetUnpacker
[unpacker_ROIDNN_roi_dnn_roidnn_apa0_0]
0
0
TensorSetUnpacker
[unpacker_ROIDNN_roi_dnn_roidnn_apa0_1]
0
0
TensorSetUnpacker
[unpacker_ROIDNN_roi_dnn_roidnn_apa0_2]
0

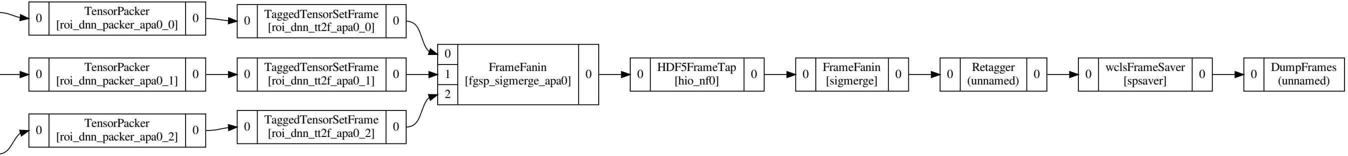
0
TensorPacker
[roi_dnn_packer_apa0_0]
0
0
TaggedTensorSetFrame
[roi_dnn_tt2f_apa0_0]
0
0
TensorPacker
[roi_dnn_packer_apa0_1]
0
0
TaggedTensorSetFrame
[roi_dnn_tt2f_apa0_1]
0
0
TensorPacker
[roi_dnn_packer_apa0_2]
0
0
TaggedTensorSetFrame
[roi_dnn_tt2f_apa0_2]
0
0
1
2
FrameFanin
[fgsp_sigmerge_apa0]
0
0
HDF5FrameTap
[hio_nf0]
0
0
FrameFanin
[sigmerge]
0
0
Retagger
(unnamed)
0
0
wclsFrameSaver
[spsaver]
0
0
DumpFrames
(unnamed)