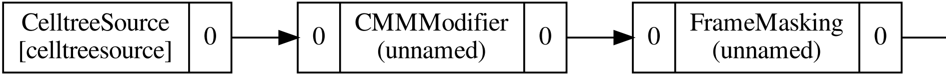
CelltreeSource
[celltreesource]
0
0
CMMModifier
(unnamed)
0
0
FrameMasking
(unnamed)
0

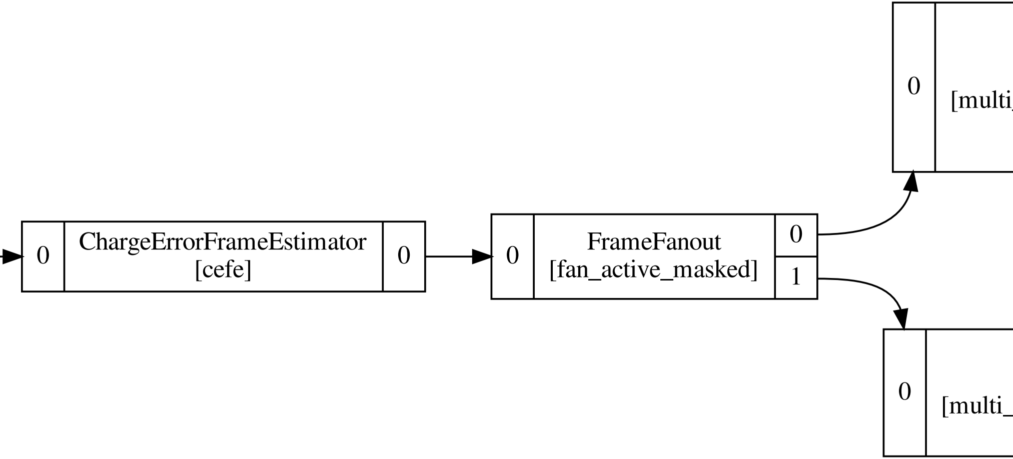
0
ChargeErrorFrameEstimator
[cefe]
0
0
FrameFanout
[fan_active_masked]
0
1
0
[multi
0
[multi_

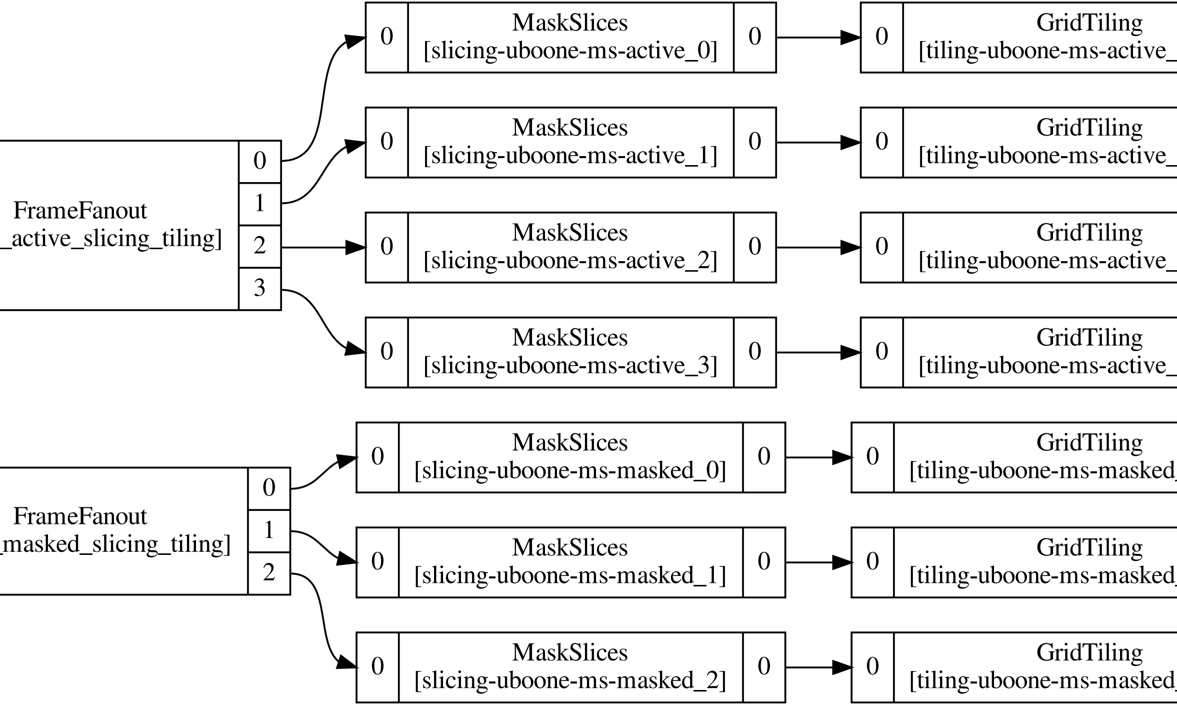
FrameFanout
_active_slicing_tiling]
0
1
2
3
MaskSlices
[slicing-uboone-ms-active_0]
MaskSlices
[slicing-uboone-ms-active_1]
MaskSlices
[slicing-uboone-ms-active_2]
MaskSlices
[slicing-uboone-ms-active_3]
GridTiling
[tiling-uboone-ms-active_
GridTiling
[tiling-uboone-ms-active_
GridTiling
[tiling-uboone-ms-active_
GridTiling
[tiling-uboone-ms-active_
FrameFanout
_masked_slicing_tiling]
0
1
2
MaskSlices
[slicing-uboone-ms-masked_0]
MaskSlices
[slicing-uboone-ms-masked_1]
MaskSlices
[slicing-uboone-ms-masked_2]
GridTiling
[tiling-uboone-ms-masked_
GridTiling
[tiling-uboone-ms-masked_
GridTiling
[tiling-uboone-ms-masked_
0

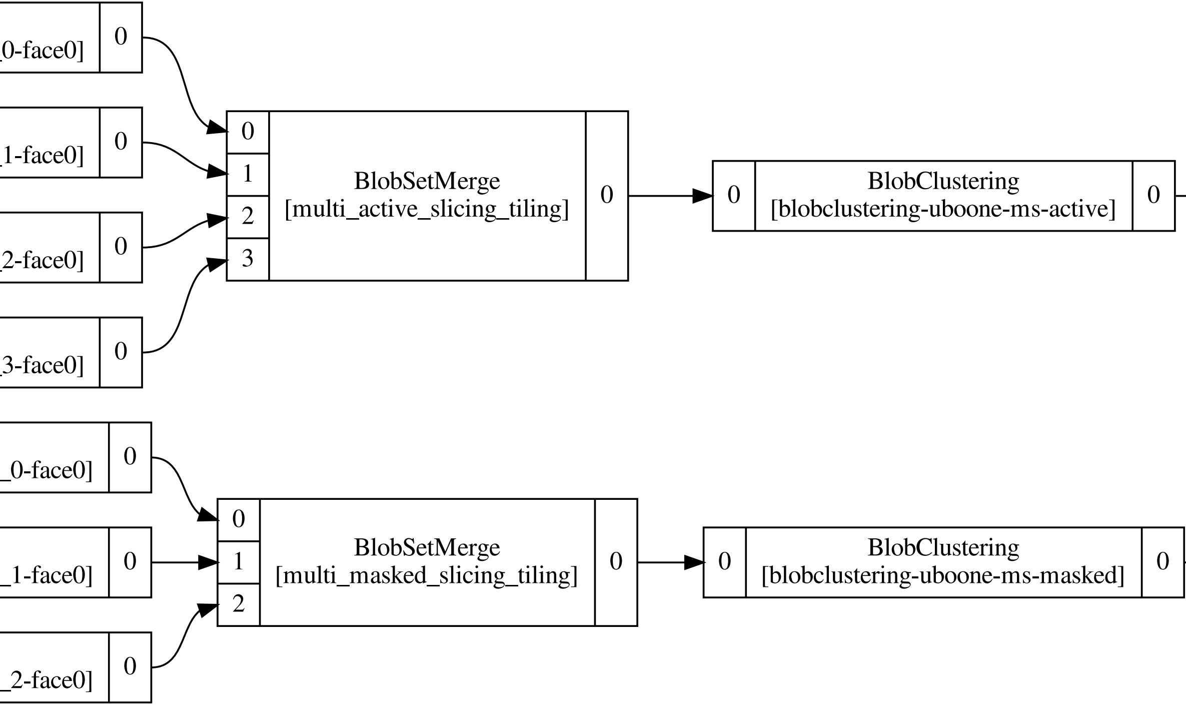
0-face0]
0
1-face0]
0
2-face0]
0
3-face0]
0
0
1
2
3
BlobSetMerge
[multi_active_slicing_tiling]
0
0
BlobClustering
[blobclustering-uboone-ms-active]
0
_0-face0]
0
_1-face0]
0
_2-face0]
0
0
1
2
BlobSetMerge
[multi_masked_slicing_tiling]
0
0
BlobClustering
[blobclustering-uboone-ms-masked]
0

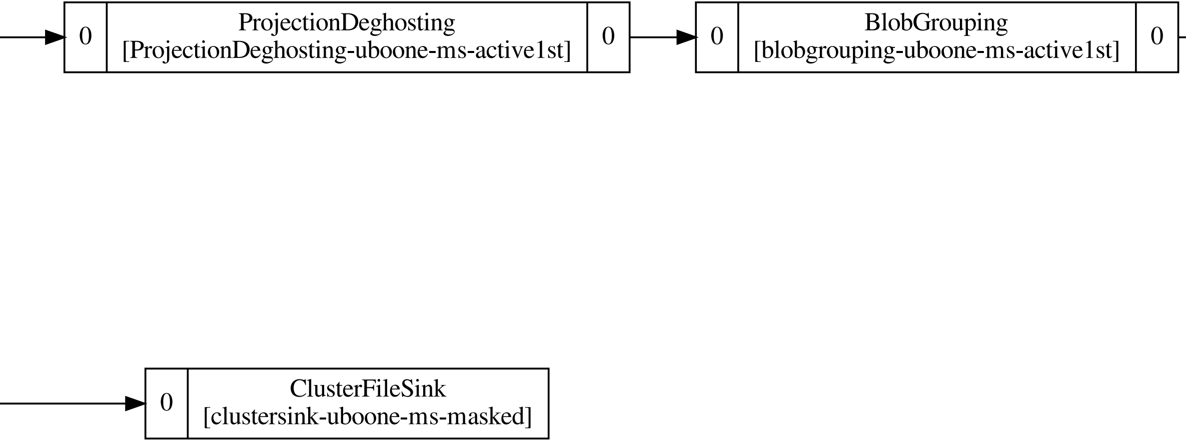
0
ProjectionDeghosting
[ProjectionDeghosting-uboone-ms-active1st]
0
0
BlobGrouping
[blobgrouping-uboone-ms-active1st]
0
0
ClusterFileSink
[clustersink-uboone-ms-masked]

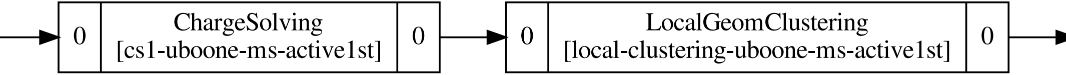
0
ChargeSolving
[cs1-uboone-ms-active1st]
0
0
LocalGeomClustering
[local-clustering-uboone-ms-active1st]
0

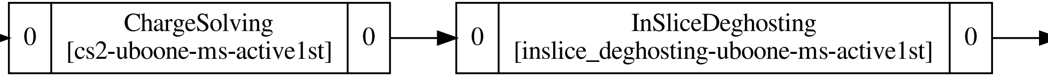
0
ChargeSolving
[cs2-uboone-ms-active1st]
0
0
InSliceDeghosting
[inslice_deghosting-uboone-ms-active1st]
0

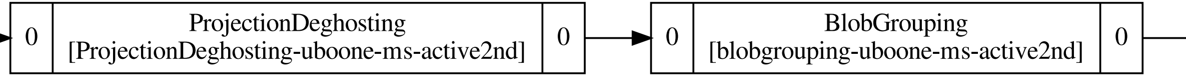
0
ProjectionDeghosting
[ProjectionDeghosting-uboone-ms-active2nd]
0
0
BlobGrouping
[blobgrouping-uboone-ms-active2nd]
0

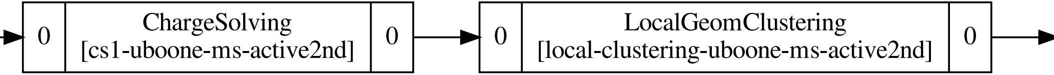
0
ChargeSolving
[cs1-uboone-ms-active2nd]
0
0
LocalGeomClustering
[local-clustering-uboone-ms-active2nd]
0

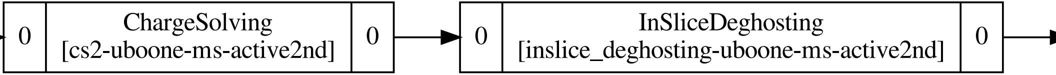
0
ChargeSolving
[cs2-uboone-ms-active2nd]
0
0
InSliceDeghosting
[inslice_deghosting-uboone-ms-active2nd]
0

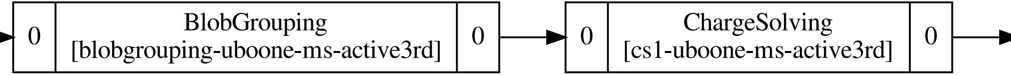
0
BlobGrouping
[blobgrouping-uboone-ms-active3rd]
0
0
ChargeSolving
[cs1-uboone-ms-active3rd]
0

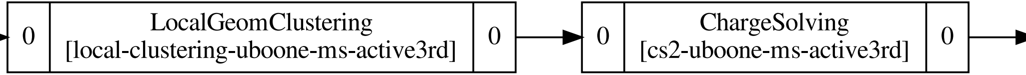
0
LocalGeomClustering
[local-clustering-uboone-ms-active3rd]
0
0
ChargeSolving
[cs2-uboone-ms-active3rd]
0

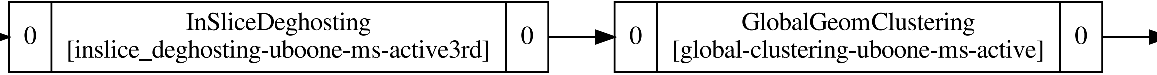
0
InSliceDeghosting
[inslice_deghosting-uboone-ms-active3rd]
0
0
GlobalGeomClustering
[global-clustering-uboone-ms-active]
0

0
ClusterFileSink
[clustersink-uboone-ms-active]