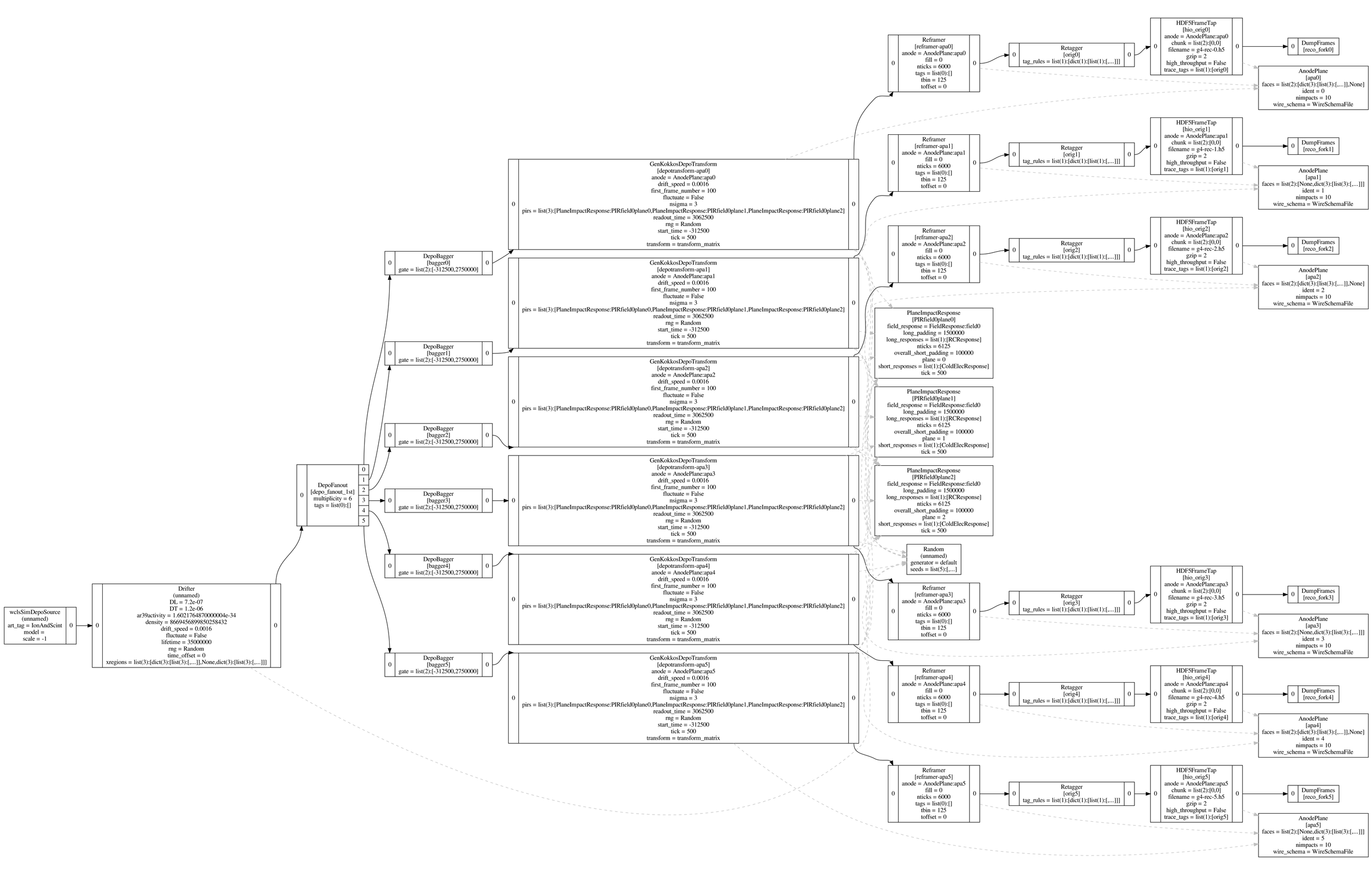
wclsSimDepoSource
(unnamed)
art_tag = IonAndScint
model =
scale = -1
Drifter
(unnamed)
DL = 7.2e-07
DT = 1.2e-06
ar39activity = 1.6021764870000004e-34
density = 8669456899850258432
drift_speed = 0.0016
fluctuate = False
lifetime = 35000000
rng = Random
time_offset = 0
xregions = list(3):[dict(3):[list(3):[,...],None,dict(3):[list(3):[,...]]]
DepoFanout
[depo_fanout_1st]
multiplicity = 6
tags = list(0):[]
DepoBagger
[bagger0]
gate = list(2):[-312500,2750000]
DepoBagger
[bagger1]
gate = list(2):[-312500,2750000]
DepoBagger
[bagger2]
gate = list(2):[-312500,2750000]
DepoBagger
[bagger3]
gate = list(2):[-312500,2750000]
DepoBagger
[bagger4]
gate = list(2):[-312500,2750000]
DepoBagger
[bagger5]
gate = list(2):[-312500,2750000]
GenKokkosDepoTransform
[depotransform-apa0]
anode = AnodePlane:apa0
drift_speed = 0.0016
first_frame_number = 100
fluctuate = False
nsigma = 3
pirs = list(3):[PlaneImpactResponse:PIRfield0plane0,PlaneImpactResponse:PIRfield0plane1,PlaneImpactResponse:PIRfield0plane2]
readout_time = 3062500
rng = Random
start_time = -312500
tick = 500
transform = transform_matrix
GenKokkosDepoTransform
[depotransform-apa1]
anode = AnodePlane:apa1
drift_speed = 0.0016
first_frame_number = 100
fluctuate = False
nsigma = 3
pirs = list(3):[PlaneImpactResponse:PIRfield0plane0,PlaneImpactResponse:PIRfield0plane1,PlaneImpactResponse:PIRfield0plane2]
readout_time = 3062500
rng = Random
start_time = -312500
tick = 500
transform = transform_matrix
GenKokkosDepoTransform
[depotransform-apa2]
anode = AnodePlane:apa2
drift_speed = 0.0016
first_frame_number = 100
fluctuate = False
nsigma = 3
pirs = list(3):[PlaneImpactResponse:PIRfield0plane0,PlaneImpactResponse:PIRfield0plane1,PlaneImpactResponse:PIRfield0plane2]
readout_time = 3062500
rng = Random
start_time = -312500
tick = 500
transform = transform_matrix
GenKokkosDepoTransform
[depotransform-apa3]
anode = AnodePlane:apa3
drift_speed = 0.0016
first_frame_number = 100
fluctuate = False
nsigma = 3
pirs = list(3):[PlaneImpactResponse:PIRfield0plane0,PlaneImpactResponse:PIRfield0plane1,PlaneImpactResponse:PIRfield0plane2]
readout_time = 3062500
rng = Random
start_time = -312500
tick = 500
transform = transform_matrix
GenKokkosDepoTransform
[depotransform-apa4]
anode = AnodePlane:apa4
drift_speed = 0.0016
first_frame_number = 100
fluctuate = False
nsigma = 3
pirs = list(3):[PlaneImpactResponse:PIRfield0plane0,PlaneImpactResponse:PIRfield0plane1,PlaneImpactResponse:PIRfield0plane2]
readout_time = 3062500
rng = Random
start_time = -312500
tick = 500
transform = transform_matrix
GenKokkosDepoTransform
[depotransform-apa5]
anode = AnodePlane:apa5
drift_speed = 0.0016
first_frame_number = 100
fluctuate = False
nsigma = 3
pirs = list(3):[PlaneImpactResponse:PIRfield0plane0,PlaneImpactResponse:PIRfield0plane1,PlaneImpactResponse:PIRfield0plane2]
readout_time = 3062500
rng = Random
start_time = -312500
tick = 500
transform = transform_matrix
Reframer
[reframer-apa0]
anode = AnodePlane:apa0
fill = 0
nticks = 6000
tags = list(0):[]
tbin = 125
toffset = 0
Reframer
[reframer-apa1]
anode = AnodePlane:apa1
fill = 0
nticks = 6000
tags = list(0):[]
tbin = 125
toffset = 0
Reframer
[reframer-apa2]
anode = AnodePlane:apa2
fill = 0
nticks = 6000
tags = list(0):[]
tbin = 125
toffset = 0
Reframer
[reframer-apa3]
anode = AnodePlane:apa3
fill = 0
nticks = 6000
tags = list(0):[]
tbin = 125
toffset = 0
Reframer
[reframer-apa4]
anode = AnodePlane:apa4
fill = 0
nticks = 6000
tags = list(0):[]
tbin = 125
toffset = 0
Reframer
[reframer-apa5]
anode = AnodePlane:apa5
fill = 0
nticks = 6000
tags = list(0):[]
tbin = 125
toffset = 0
Retagger
[orig0]
tag_rules = list(1):[dict(1):[list(1):[,...]]]
Retagger
[orig1]
tag_rules = list(1):[dict(1):[list(1):[,...]]]
Retagger
[orig2]
tag_rules = list(1):[dict(1):[list(1):[,...]]]
Retagger
[orig3]
tag_rules = list(1):[dict(1):[list(1):[,...]]]
Retagger
[orig4]
tag_rules = list(1):[dict(1):[list(1):[,...]]]
Retagger
[orig5]
tag_rules = list(1):[dict(1):[list(1):[,...]]]
HDF5FrameTap
[hio_orig0]
anode = AnodePlane:apa0
chunk = list(2):[0,0]
filename = g4-rec-0.h5
gzip = 2
high_throughput = False
trace_tags = list(1):[orig0]
HDF5FrameTap
[hio_orig1]
anode = AnodePlane:apa1
chunk = list(2):[0,0]
filename = g4-rec-1.h5
gzip = 2
high_throughput = False
trace_tags = list(1):[orig1]
HDF5FrameTap
[hio_orig2]
anode = AnodePlane:apa2
chunk = list(2):[0,0]
filename = g4-rec-2.h5
gzip = 2
high_throughput = False
trace_tags = list(1):[orig2]
HDF5FrameTap
[hio_orig3]
anode = AnodePlane:apa3
chunk = list(2):[0,0]
filename = g4-rec-3.h5
gzip = 2
high_throughput = False
trace_tags = list(1):[orig3]
HDF5FrameTap
[hio_orig4]
anode = AnodePlane:apa4
chunk = list(2):[0,0]
filename = g4-rec-4.h5
gzip = 2
high_throughput = False
trace_tags = list(1):[orig4]
HDF5FrameTap
[hio_orig5]
anode = AnodePlane:apa5
chunk = list(2):[0,0]
filename = g4-rec-5.h5
gzip = 2
high_throughput = False
trace_tags = list(1):[orig5]
DumpFrames
[reco_fork0]
DumpFrames
[reco_fork1]
DumpFrames
[reco_fork2]
DumpFrames
[reco_fork3]
DumpFrames
[reco_fork4]
DumpFrames
[reco_fork5]
AnodePlane
[apa0]
faces = list(2):[dict(3):[list(3):[,...]],None]
ident = 0
nimpacts = 10
wire_schema = WireSchemaFile
AnodePlane
[apa1]
faces = list(2):[None,dict(3):[list(3):[,...]]]
ident = 1
nimpacts = 10
wire_schema = WireSchemaFile
AnodePlane
[apa2]
faces = list(2):[dict(3):[list(3):[,...]],None]
ident = 2
nimpacts = 10
wire_schema = WireSchemaFile
AnodePlane
[apa3]
faces = list(2):[None,dict(3):[list(3):[,...]]]
ident = 3
nimpacts = 10
wire_schema = WireSchemaFile
AnodePlane
[apa4]
faces = list(2):[dict(3):[list(3):[,...]],None]
ident = 4
nimpacts = 10
wire_schema = WireSchemaFile
AnodePlane
[apa5]
faces = list(2):[None,dict(3):[list(3):[,...]]]
ident = 5
nimpacts = 10
wire_schema = WireSchemaFile
PlaneImpactResponse
[PIRfield0plane0]
field_response = FieldResponse:field0
long_padding = 1500000
long_responses = list(1):[RCResponse]
nticks = 6125
overall_short_padding = 100000
plane = 0
short_responses = list(1):[ColdElecResponse]
tick = 500
PlaneImpactResponse
[PIRfield0plane1]
field_response = FieldResponse:field0
long_padding = 1500000
long_responses = list(1):[RCResponse]
nticks = 6125
overall_short_padding = 100000
plane = 1
short_responses = list(1):[ColdElecResponse]
tick = 500
PlaneImpactResponse
[PIRfield0plane2]
field_response = FieldResponse:field0
long_padding = 1500000
long_responses = list(1):[RCResponse]
nticks = 6125
overall_short_padding = 100000
plane = 2
short_responses = list(1):[ColdElecResponse]
tick = 500
Random
(unnamed)
generator = default
seeds = list(5):[,...]