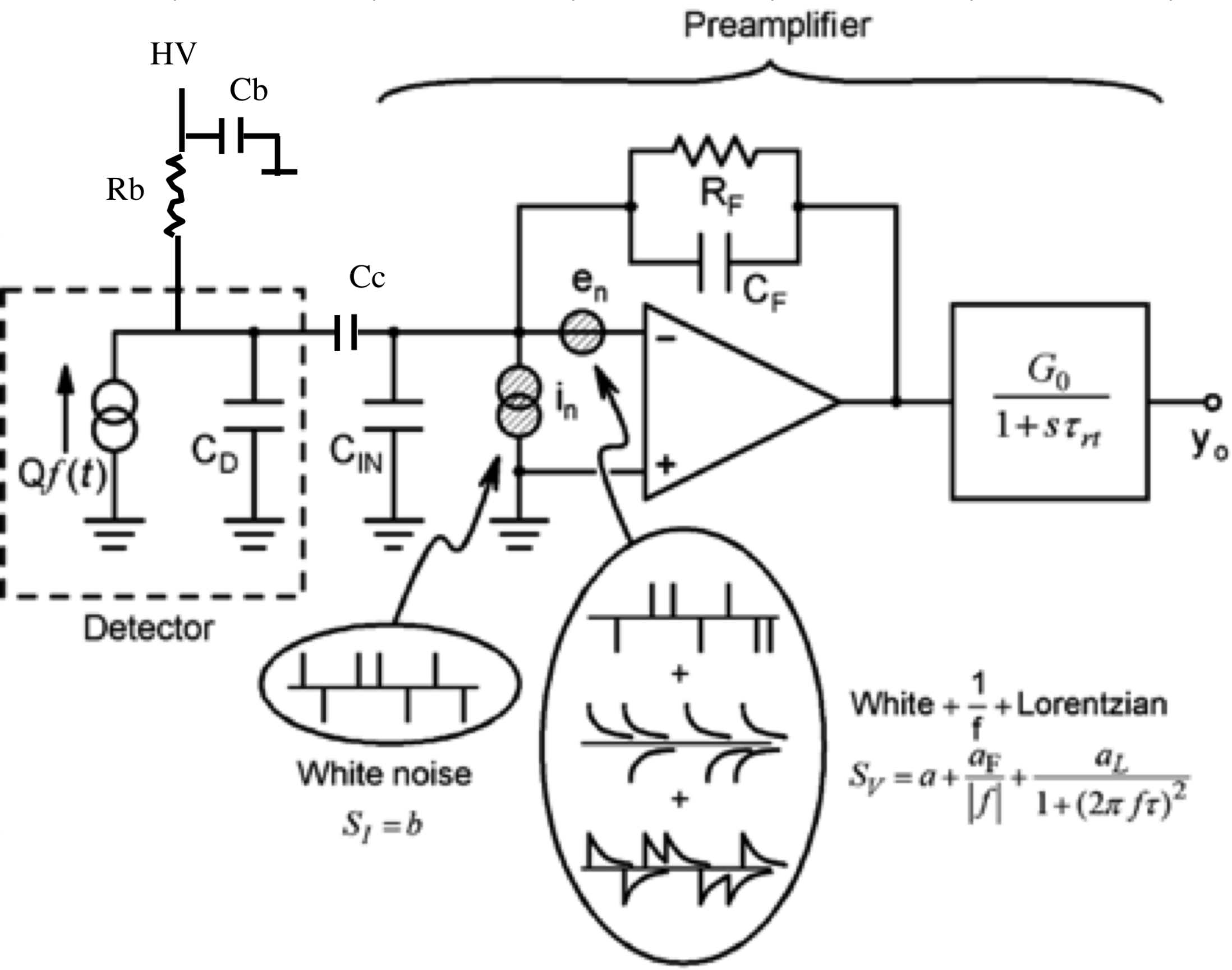
Preamplifier
HV
Cb
Rb
Cc
R_F
C_F
e_n
i_n
$Qf(t)$
C_D
C_{IN}
$\frac{G_0}{1+s\tau_n}$
y_o
Detector
White noise
$S_I = b$
$\text{White} + \frac{1}{f} + \text{Lorentzian}$
$S_V = a + \frac{a_F}{|f|} + \frac{a_L}{1+(2\pi f\tau)^2}$

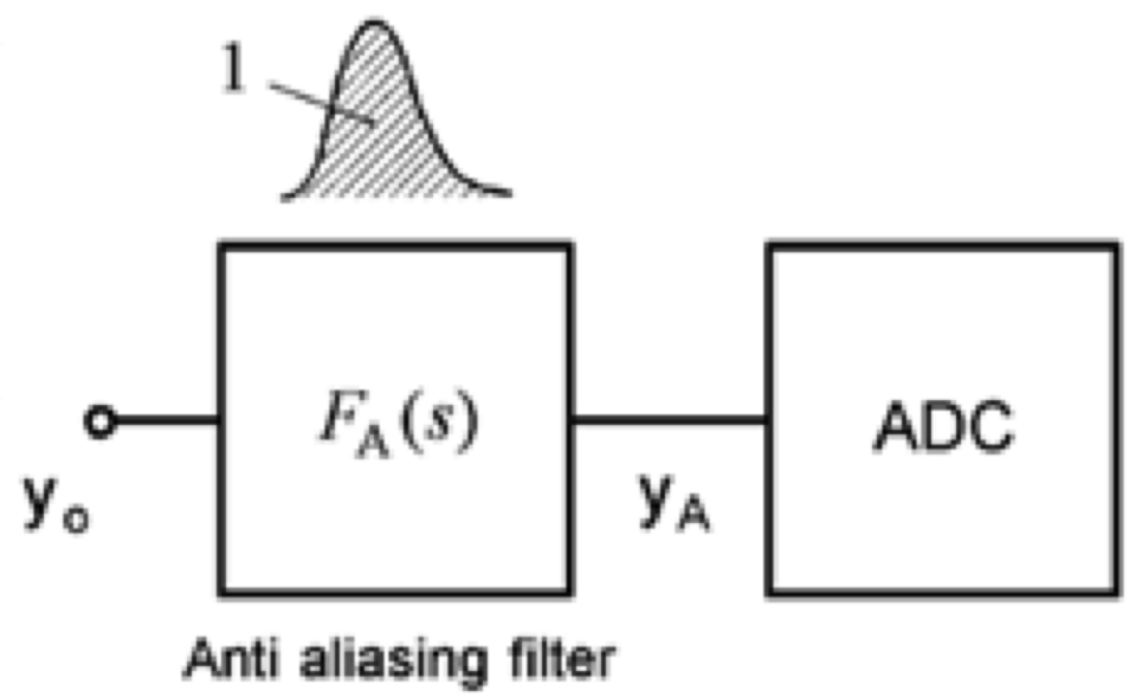
1
$F_A(s)$
ADC
y_o
y_A
Anti aliasing filter