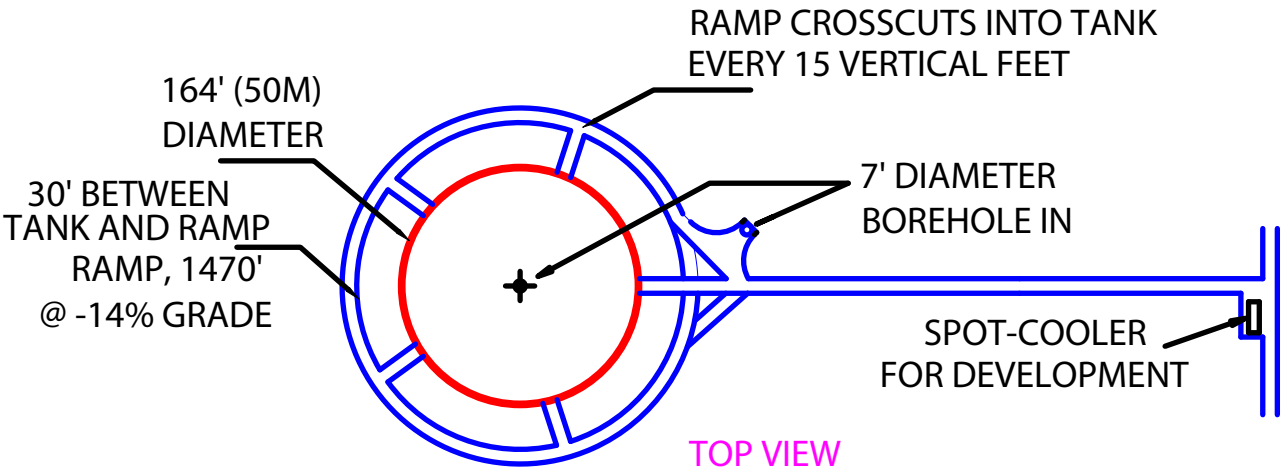

TOP VIEW

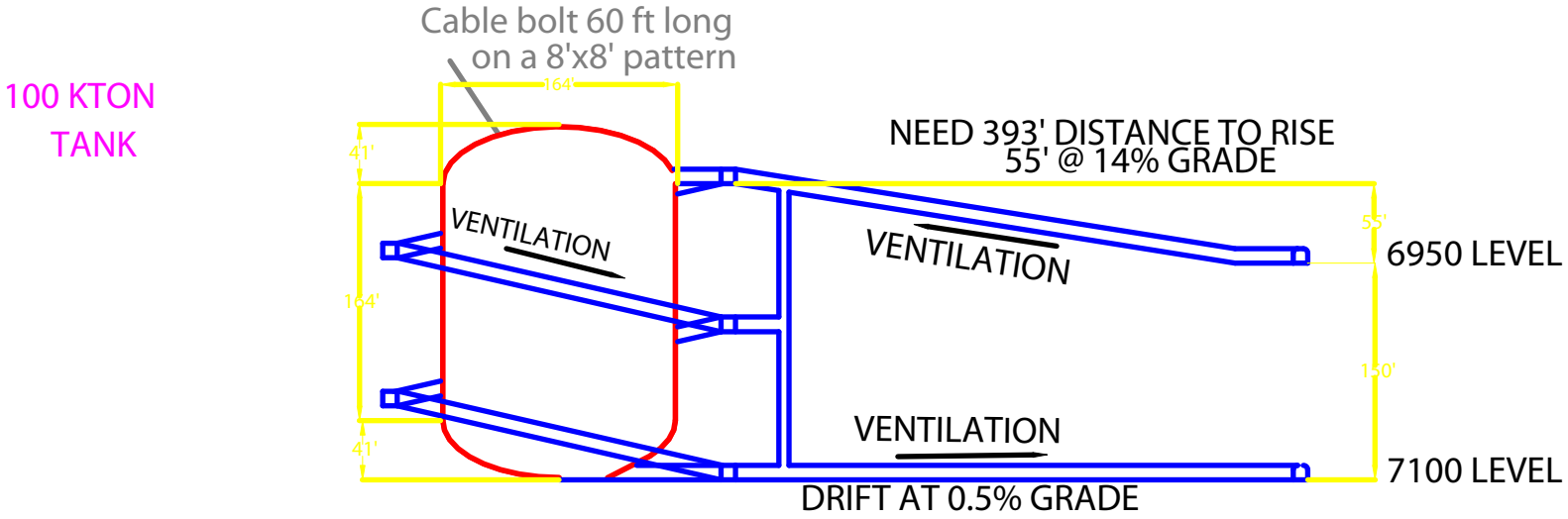

SIDE VIEW