New Tools for Precision Neutrino Interferometry

Milind Diwan

April 4, 2011

- What are neutrinos ? Why study them ?
- Interference in neutrino beams.
- Neutrino Properties from recent experiments with natural and man-made sources
- New generation experiment

slides from many experiments

esp: SK, SNO, Kamland, Minos

BROOKHAVEN NATIONAL LABORATORY

Will not talk about Daya Bay and LENS

What is the scientific interest in neutrinos ?

FERMIONS matter constituents spin = 1/2, 3/2, 5/2, …

Leptons spin =1/2

Flavor	Mass GeV/c^2	Electric charge
ν_L lightest neutrino*	$(0–0.13)\times10^{-9}$	0
e electron	0.000511	–1
ν_M middle neutrino*	$(0.009–0.13)\times10^{-9}$	0
μ muon	0.106	–1
ν_H heaviest neutrino*	$(0.04–0.14)\times10^{-9}$	0
τ tau	1.777	–1

Quarks spin =1/2

Flavor	Approx. Mass GeV/c^2	Electric charge
u up	0.002	2/3
d down	0.005	–1/3
c charm	1.3	2/3
s strange	0.1	–1/3
t top	173	2/3
b bottom	4.2	–1/3

- ~15 yrs ago all neutrino masses were thought to be 0 and all neutrino flavors distinct.
- With new discoveries a distinct, unexpected pattern has emerged.

- Science of neutrinos is has deep connections to understanding of matter, cosmology, and astrophysics.
- Existence of neutrino mass itself is physics beyond the standard model because of the left/right properties of the neutrino as well as the smallness of the mass. It implies a new mechanism for mass generation in which neutrinos are their own anti-particles.

Basic Interactions of neutrinos

All the particles of a given kind are identical.
All electrons are absolutely identical.
Electrons do not have birthmarks.

But there are 3 kinds, or flavors, of electron-like particles:

Particle	Symbol	Mass	Associated Neutrino
Electron	e	1	ν_e
Muon	μ	200	ν_μ
Tau	τ	3500	ν_τ

Charged leptons

Neutrinos or neutral leptons

Neutrinos are always produced or destroyed in association with their charged partner with the Weak interaction.

Creation

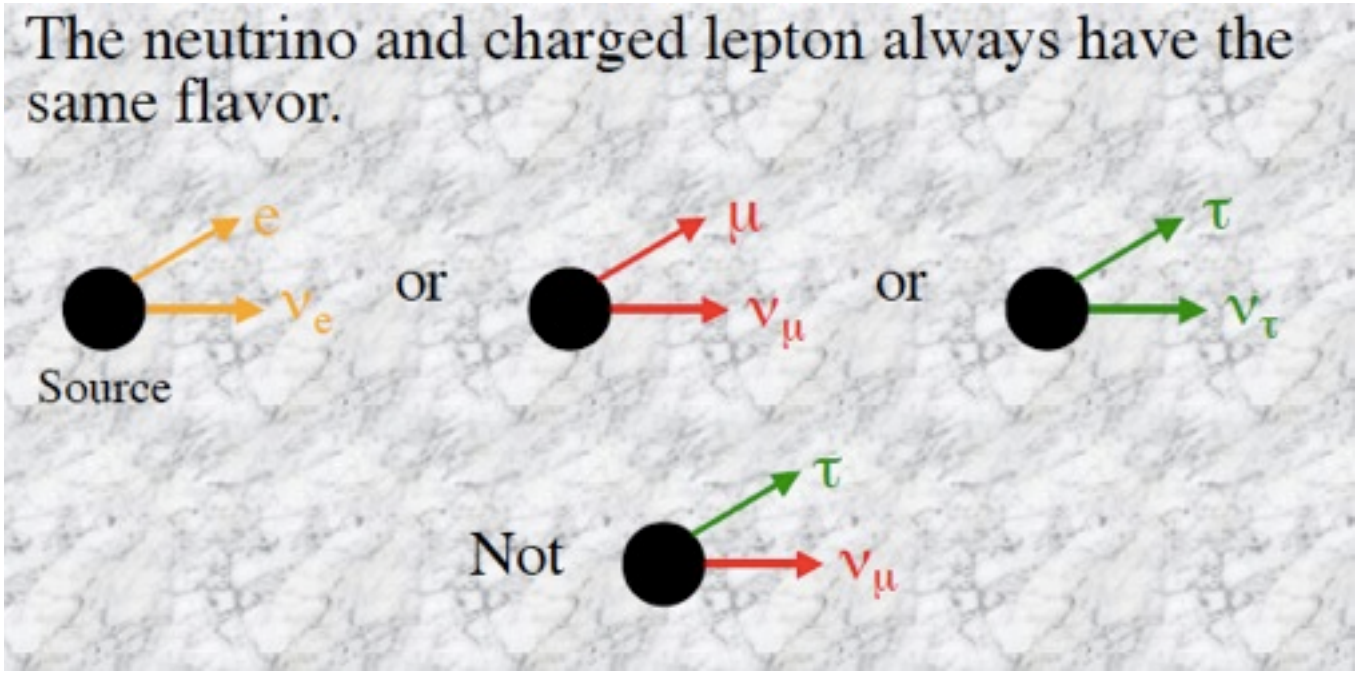

Detection

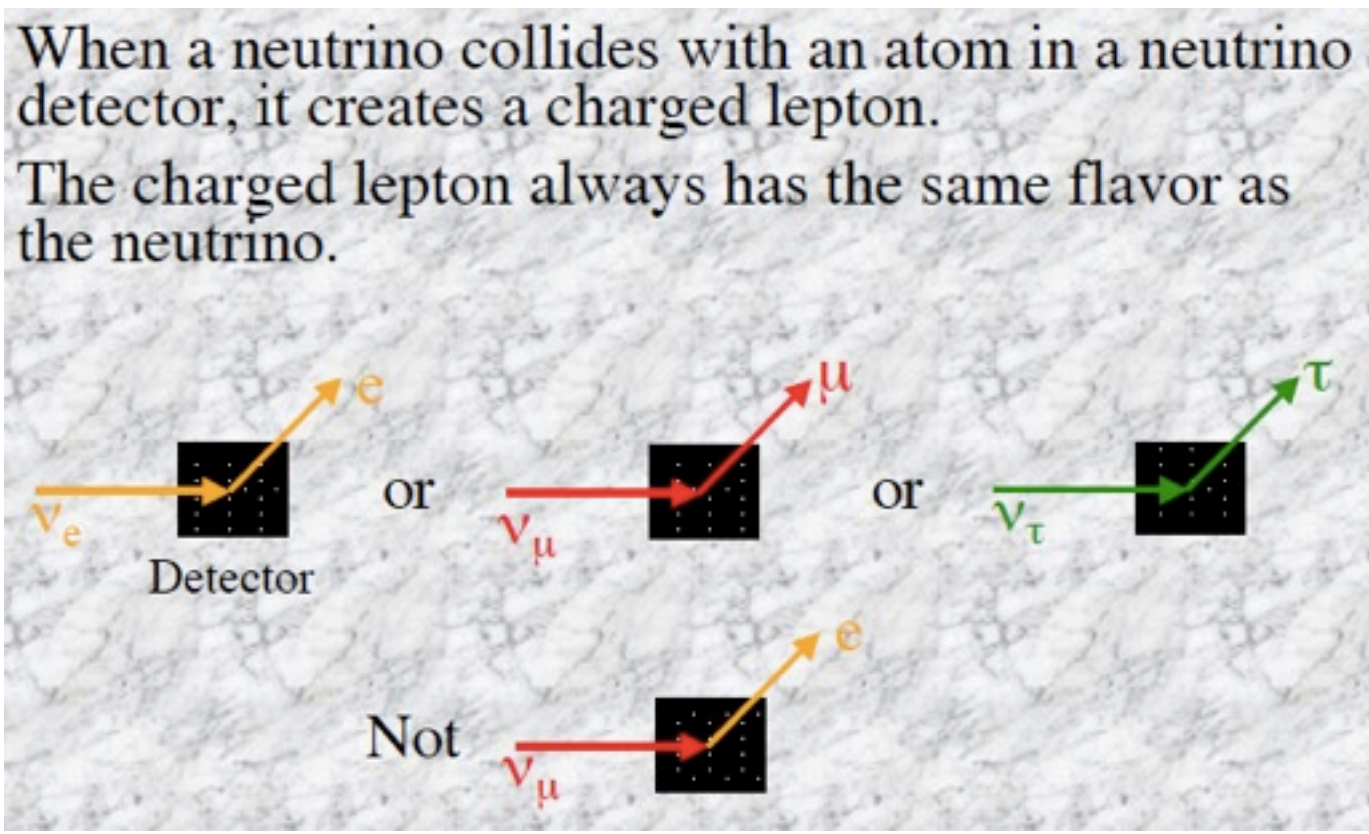

These are called “Charged current” interactions in which neutrino changes electrical charge.

There are also “neutral current” interactions in which a neutrino has an elastic interaction that leaves observable energy in detector.

Neutrinos in Cosmology

- The most abundant particle is the photon: ~400/cc
- The most abundant matter particle is the neutrino at 56/cc of each type.
- CNB (1.95K) is a relic of the big bang similar to the CMB (2.725K). Neutrinos decoupled at 2 sec while photons decoupled at ~400,000 yrs.

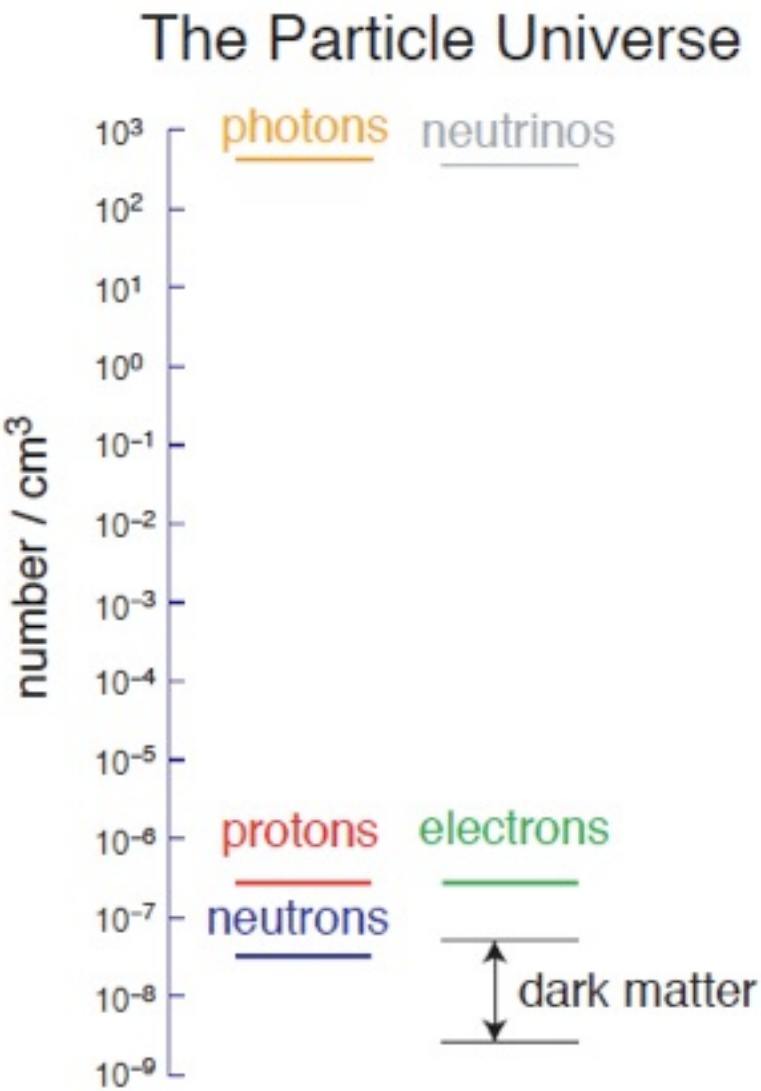

Current picture of neutrino masses points to another mass generation mechanism.

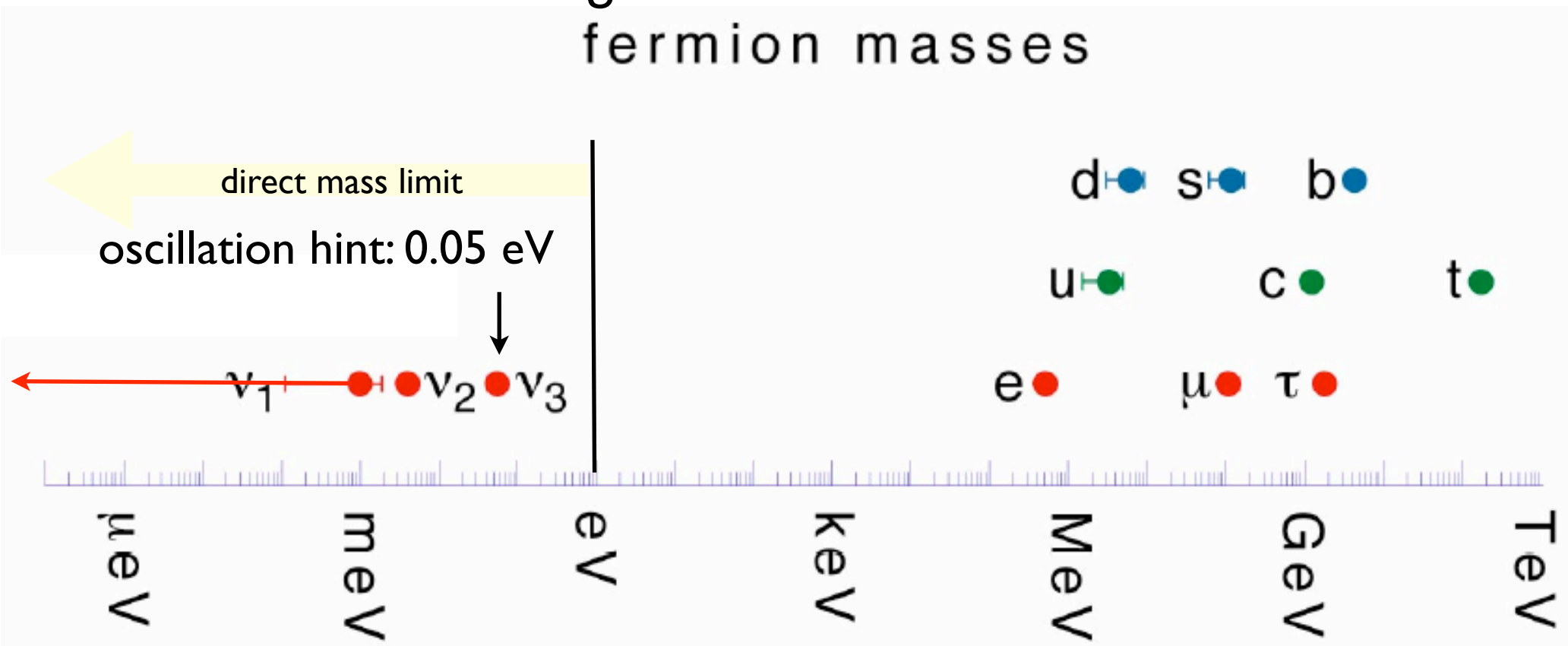

Mass is a coupling of the left and right components of the Fermion field, unless it is a neutral fermion in which case mass can couple fields of same handedness.

Why Mass could imply Lepton number violation ?

	Particle	Anti-particle
Left	$(e \quad \nu)_L$	$\overline{(e \quad \nu)_L}$
Right	$e_R \quad \nu_R$	$\bar{e}_R \quad \bar{\nu}_R$

Not in SM

- Standard model has only left handed leptons in isopin states. But if neutrino has mass it can become right handed.
- If $\bar{\nu}_L = \nu_R$ (Majorana) then neutrinos are their own antiparticles and can annihilate themselves thus destroying L.

If neutrinos have mass; the massive states need not be the same as the Weak interaction states.

This will lead to interference effects

$$\begin{pmatrix} \nu_a \\ \nu_b \end{pmatrix} = \begin{pmatrix} \cos(\theta) & \sin(\theta) \\ -\sin(\theta) & \cos(\theta) \end{pmatrix} \begin{pmatrix} \nu_1 \\ \nu_2 \end{pmatrix}$$

$$\begin{aligned} \nu_a(t) &= \cos(\theta)\nu_1(t) + \sin(\theta)\nu_2(t) \\ P(\nu_a \to \nu_b) &= |<\nu_b|\nu_a(t)>|^2 \\ &= \sin^2(\theta)\cos^2(\theta)|e^{-iE_2 t} - e^{-iE_1 t}|^2 \end{aligned}$$

Sufficient to understand most of the physics:

$$P(\nu_a \to \nu_b) = \sin^2 2\theta \sin^2 \frac{1.27((m_2^2 - m_1^2)/eV^2)(L/km)}{(E/GeV)}$$

$$P(\nu_a \to \nu_a) = 1 - \sin^2 2\theta \sin^2 \frac{1.27(\Delta m^2/eV^2)(L/km)}{(E/GeV)}$$

Oscillation nodes at $\pi/2, 3\pi/2, 5\pi/2, \ldots$ $(\pi/2)$: $\Delta m^2 = 0.0025 eV^2$, $E = 1GeV$, $L = 494km$.

Picture with θ = 45 deg

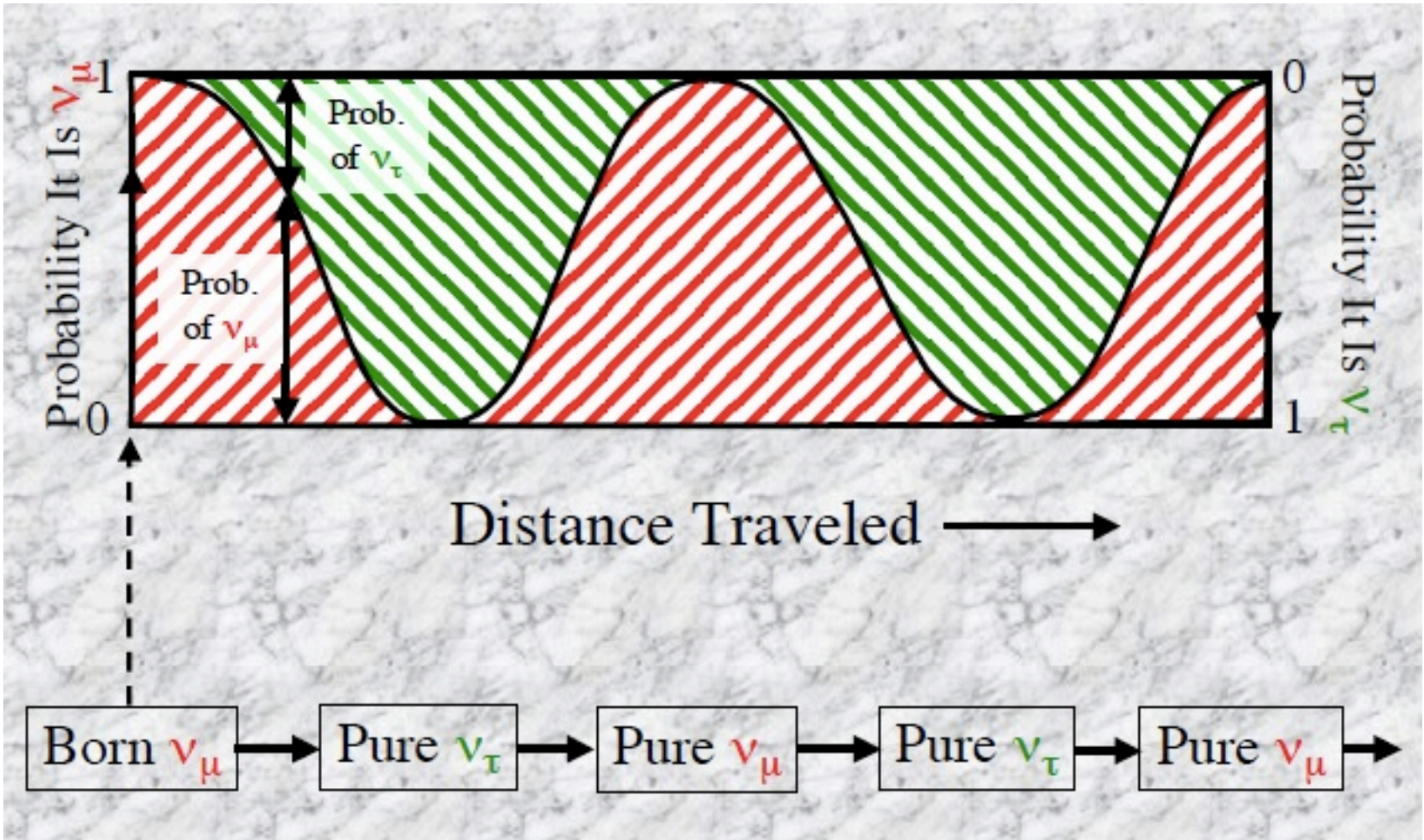

Astonishingly this is reality

Oscillations is a new interferometry.

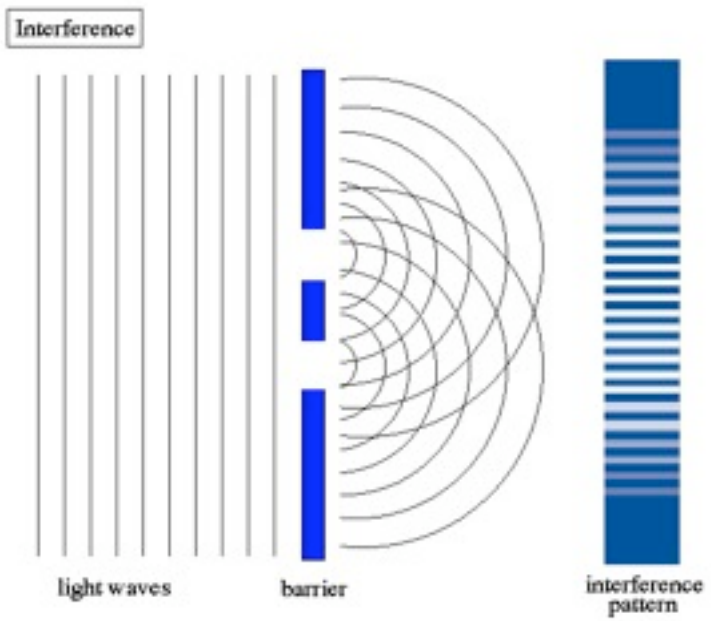

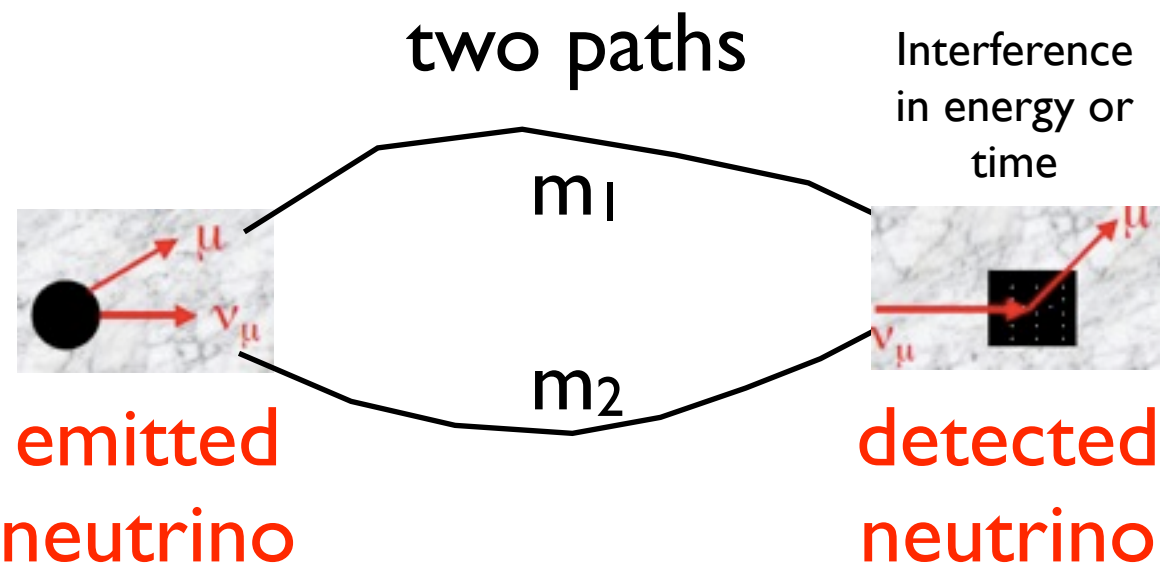

- Just as classic optical interferometry has led to new precision, neutrino interferometry has potential to be sensitive to new scales.
- e.g. Measure extremely small masses or interactions.

$$i\frac{d}{dx}\nu_f = HR_\theta\nu_m$$

L. Wolfenstein: Oscillations need to be modified in presence of matter.

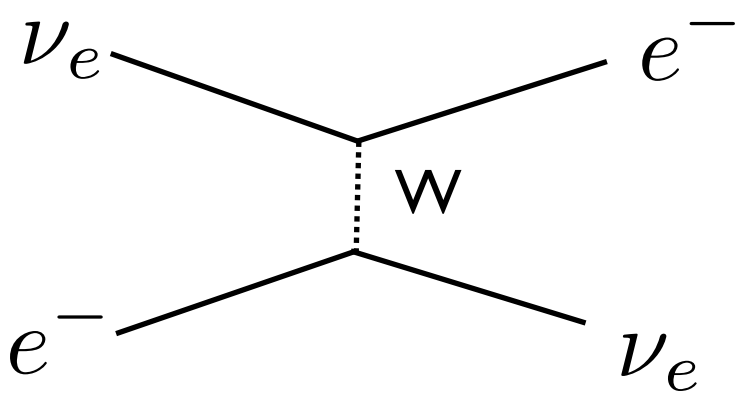

Charged Current
for electron type only

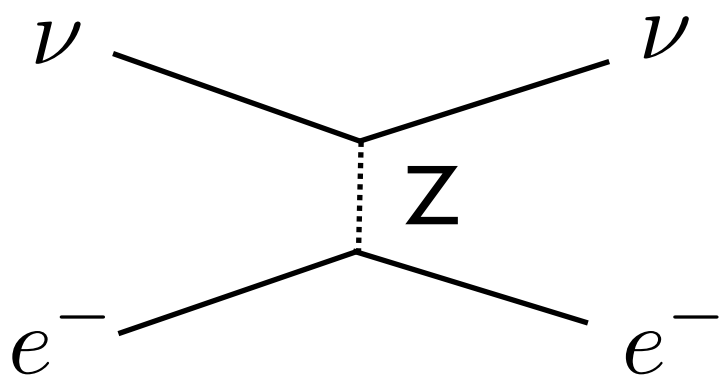

Neutral Current
for all neutrino types

Additional potential for ν_e ($\bar{\nu}_e$): $\pm\sqrt{2}G_F N_e$

N_e is electron number density.

An example of how additional phases come into the interferometry.

Oscillations in presence of matter

$$i\frac{d}{dx}\nu_f = R_\theta H(\nu_m) + H_{mat}(\nu_f)$$

$$i\frac{d}{dx}\begin{pmatrix}\nu_e\\ \nu_\mu\end{pmatrix} = \frac{1}{4E}\left(R_\theta\begin{pmatrix}m_2^2-m_1^2 & 0\\ 0 & m_1^2-m_2^2\end{pmatrix}R_\theta^T + 2E\begin{pmatrix}\sqrt{2}G_F N_e & 0\\ 0 & -\sqrt{2}G_F N_e\end{pmatrix}\right)\begin{pmatrix}\nu_e\\ \nu_\mu\end{pmatrix} \quad (3)$$

Looking at conversions of muon to electron neutrinos.

$$P_{\mu\to e} = \frac{\sin^2 2\theta}{(\cos 2\theta - a)^2 + \sin^2 2\theta}\times\sin^2\frac{L\Delta m^2}{4E}\sqrt{(a-\cos 2\theta)^2+\sin^2 2\theta}$$

$$\begin{aligned} a &= 2\sqrt{2}EG_F N_e/\Delta m^2 \\ &\approx 7.6\times 10^{-5}\times D/(gm/cc)\times E_\nu/GeV/(\Delta m^2/eV^2) \end{aligned} \quad (4)$$

This effect present if electron neutrinos in the mix

2-neutrino picture

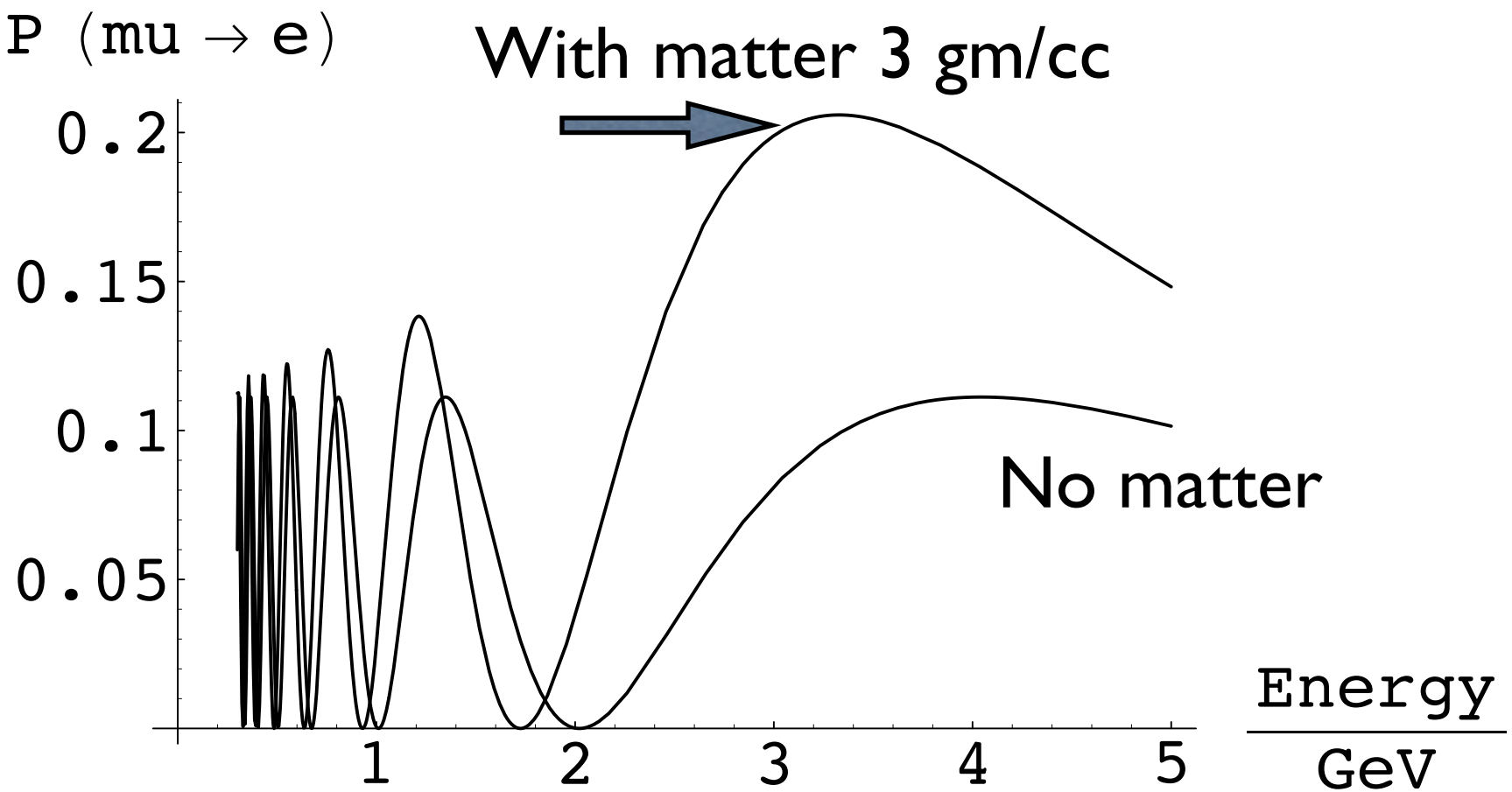

Osc. probability: 0.0025 eV^2, L= 2000 km, Theta=10deg

So far.

- 3 types of neutrinos
- Still many unknowns about these particles, but they play an important role in the early universe as well as current astrophysical processes.
- If they have mass there are fundamental consequences.
- In next slides I will review the complete picture of the 3 neutrinos: masses and mixing.

Key new evidence

- Super KamiokaNDE (SK): observe atmospheric neutrinos.
- Sudbury Neutrino Observatory (SNO): observed solar neutrinos.
- KAMLAND reactor experiment
- MINOS accelerator beam experiment

Apologies to many other pioneering experiments

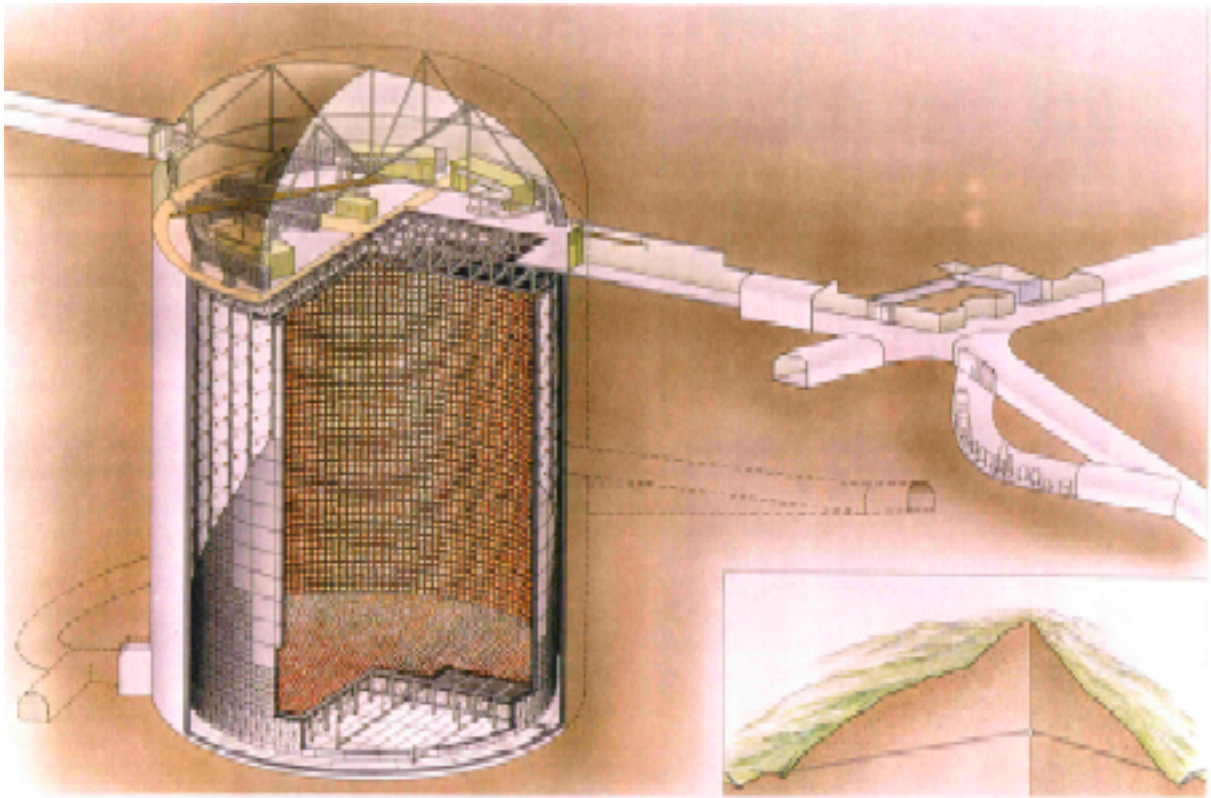

SuperKamiokaNDE
50,000 tons of water
11000 photomultipliers
Cherenkov light



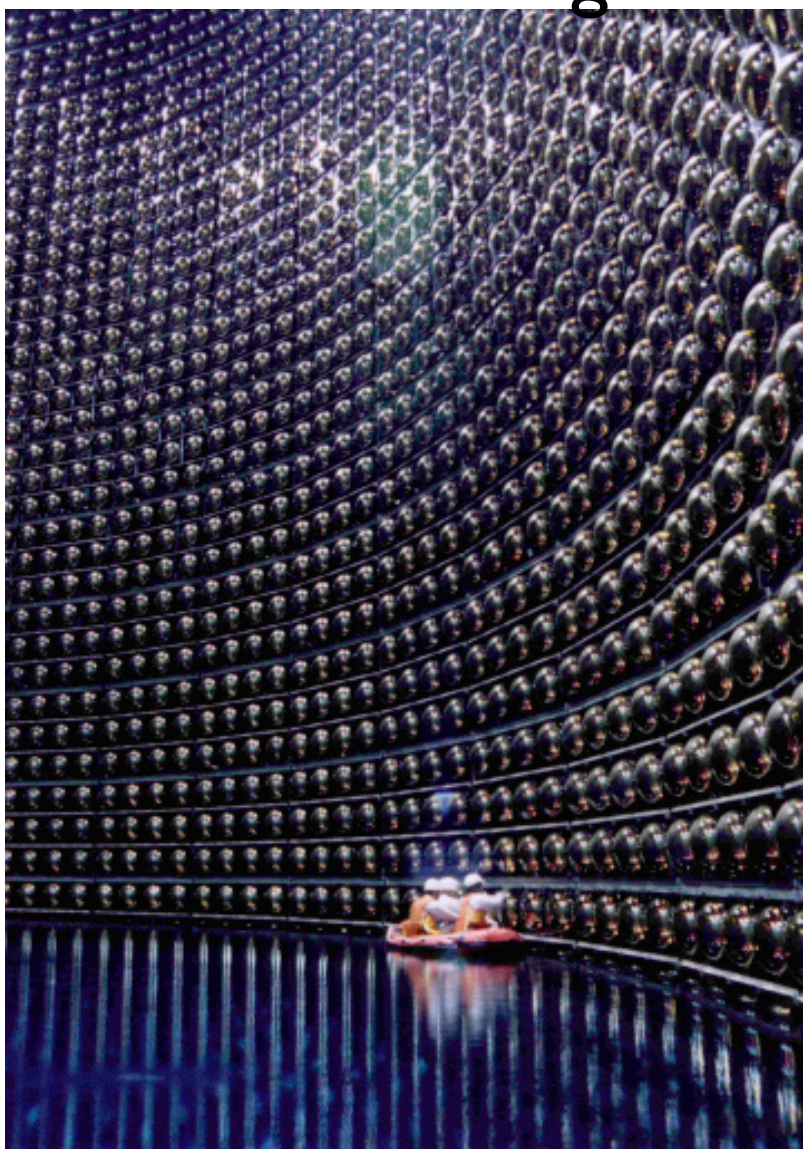

Particle Identification

6 detected photons per MeV for fast particles

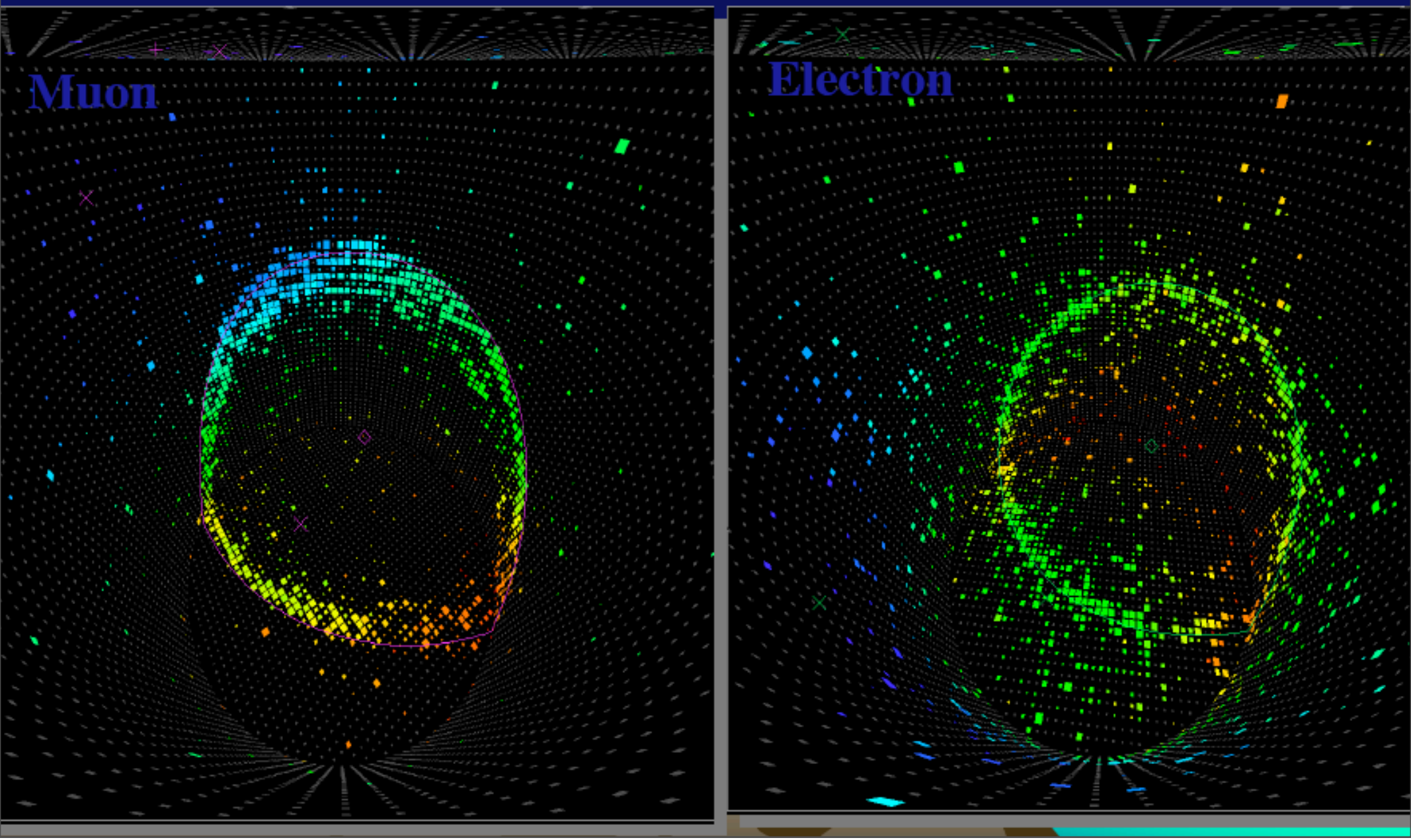

Atmospheric neutrinos as a source for oscillation experiments

Atm. neutrinos 2:1 mu:e type

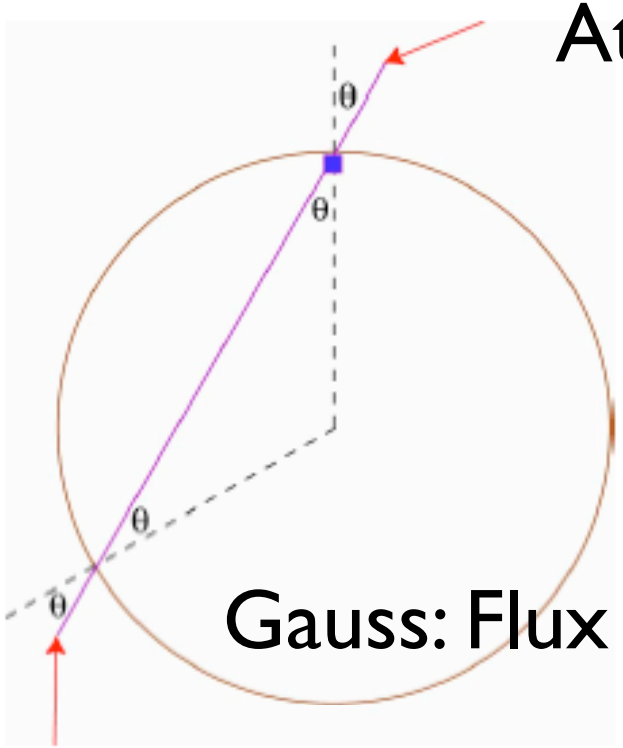

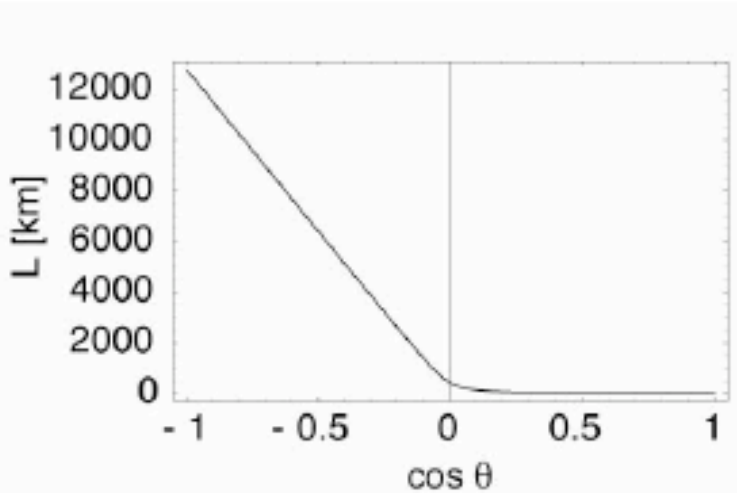

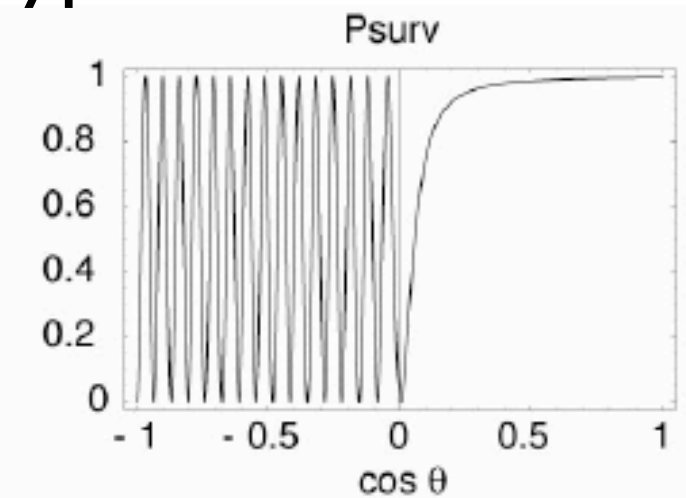

Gauss: Flux inside spherical shell isotropic

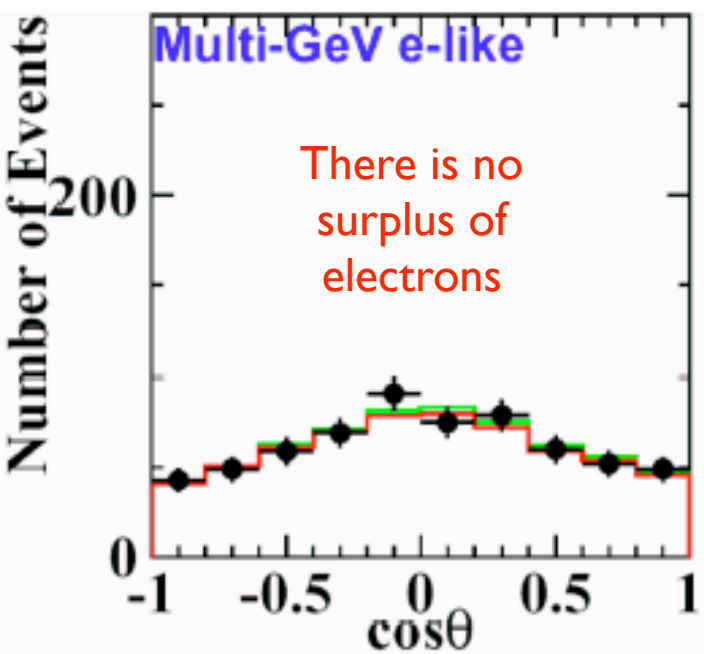

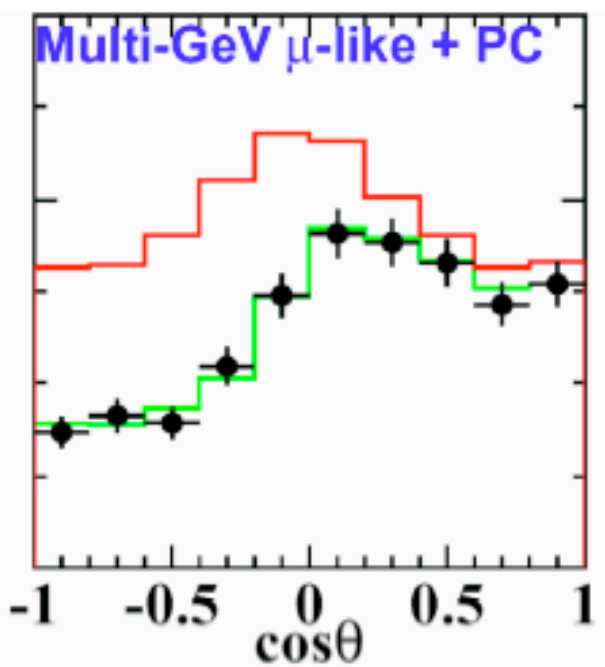

Muon neutrinos disappear from below

Evidence for neutrino oscillations from SuperK

SuperK result

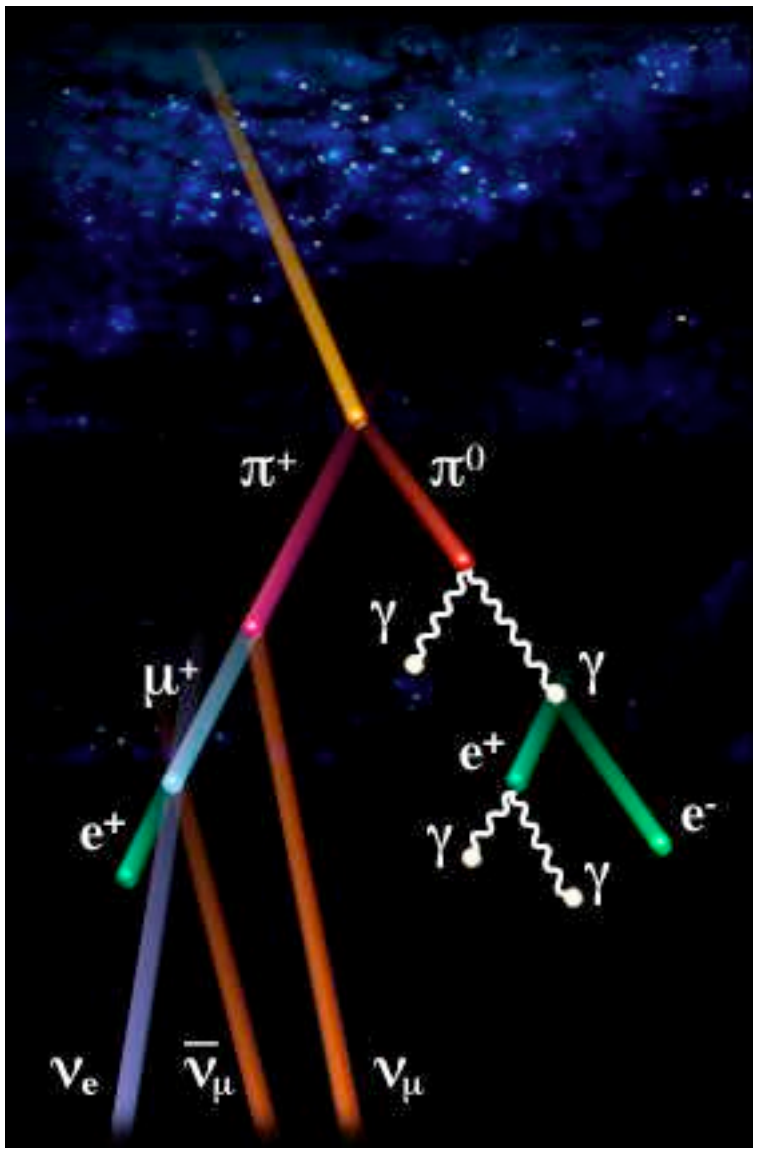

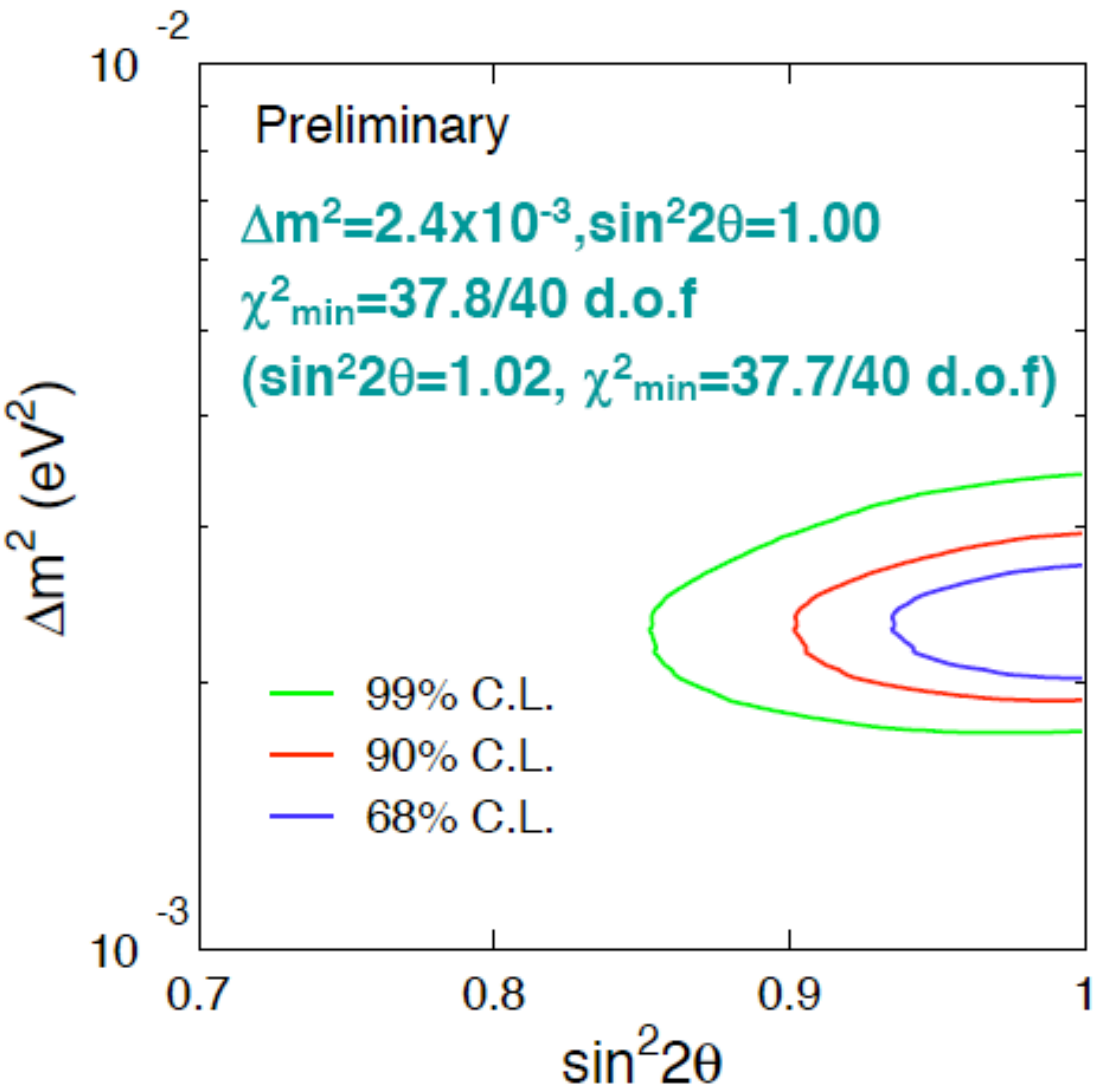

Located in a deep mine ~ 6000 mwe
because solar nu < 14 MeV

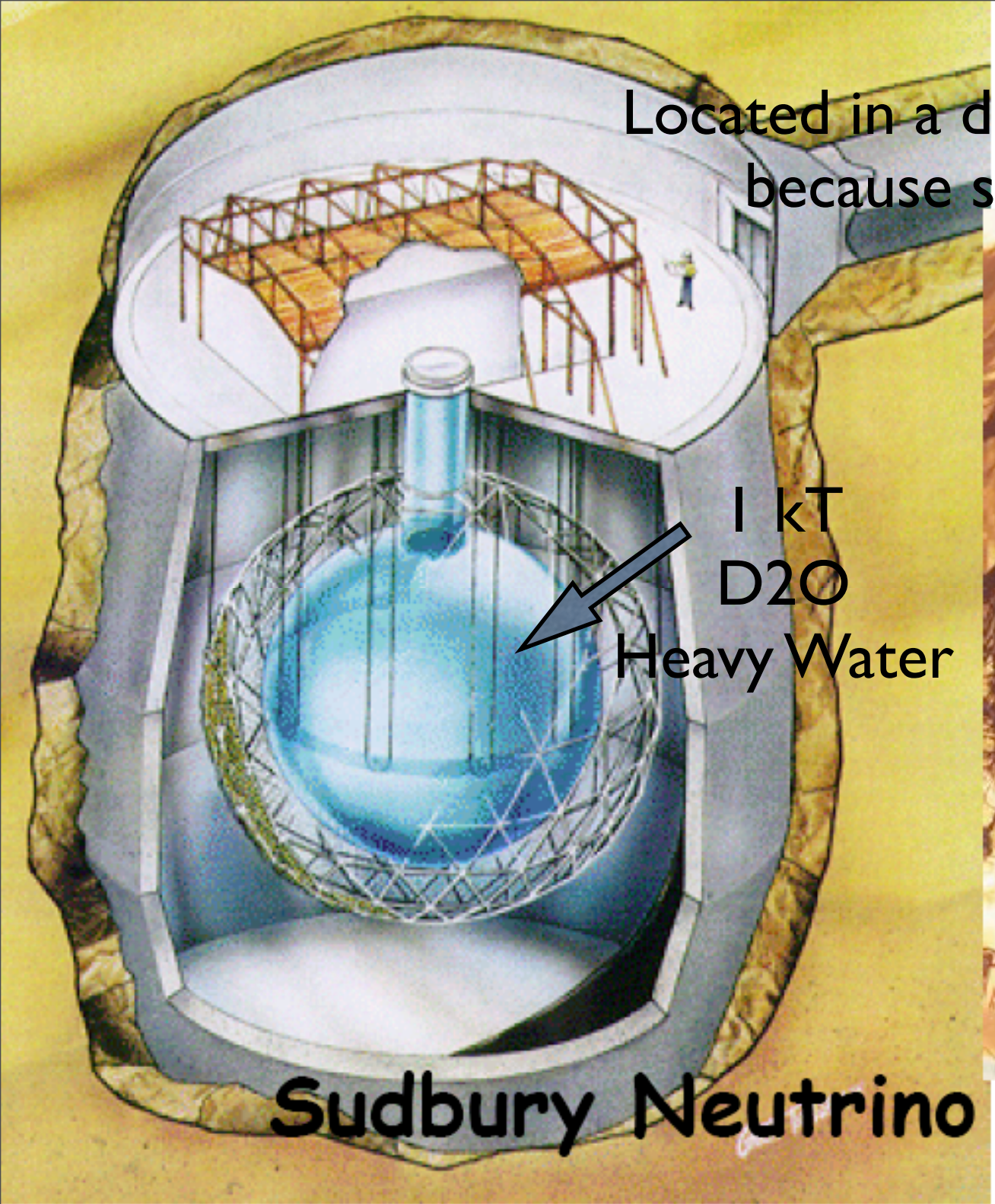

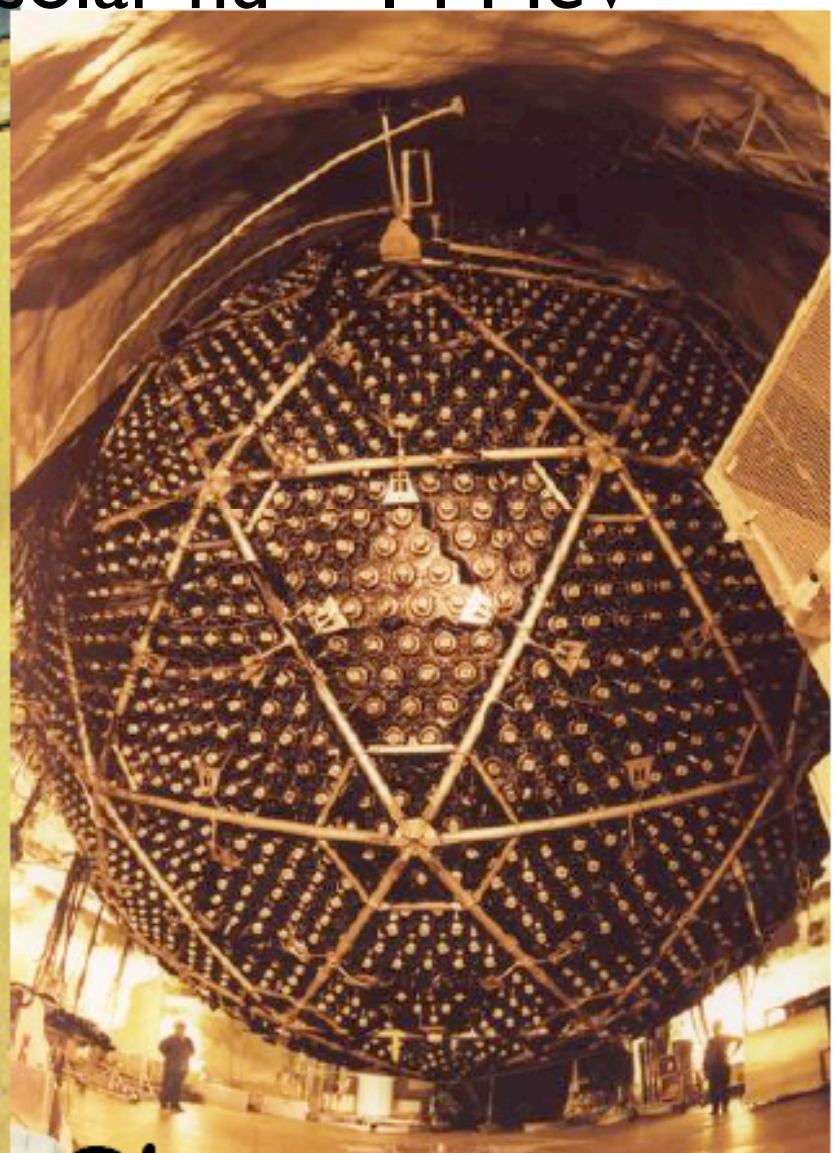

Sudbury Neutrino Observatory

Why does SNO use $300M worth of heavy water?

The Sun is known to emit electron neutrinos.

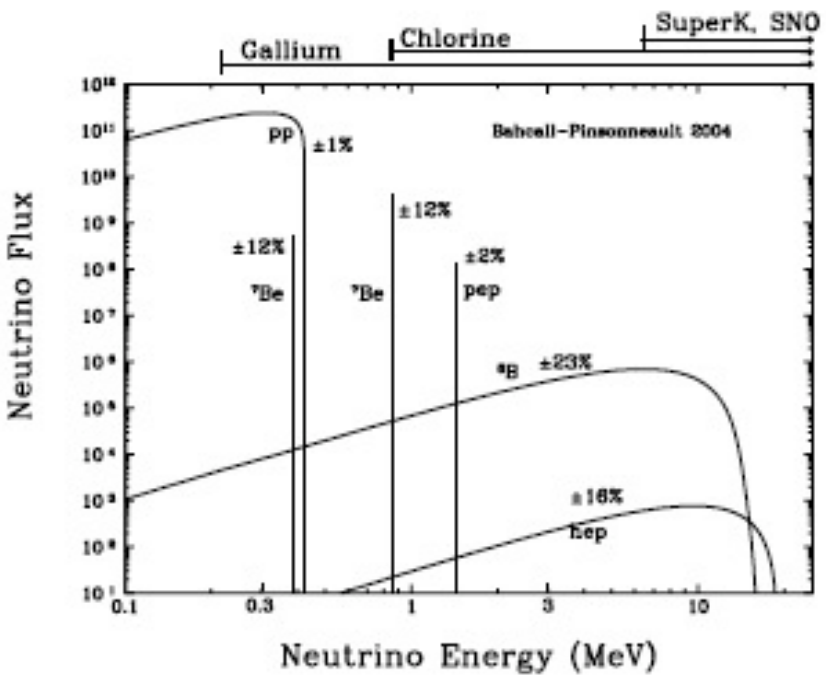

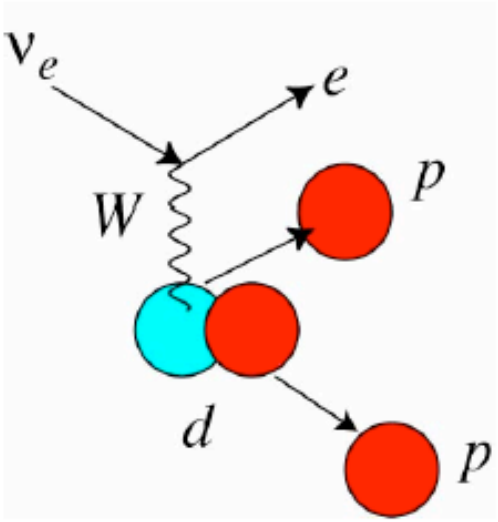

Charged Current

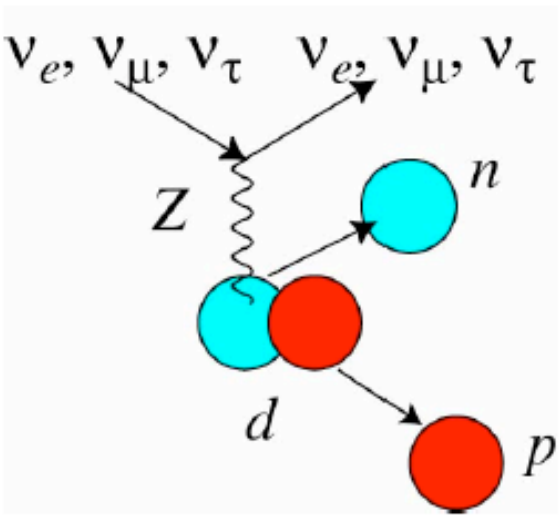

Neutral Current

Fluxes

(10^6 cm^{-2} s^{-1})

ν_e: 1.76(11)

$\nu_{\mu\tau}$: 3.41(66)

ν_{total}: 5.09(64)

ν_{SSM}: 5.05

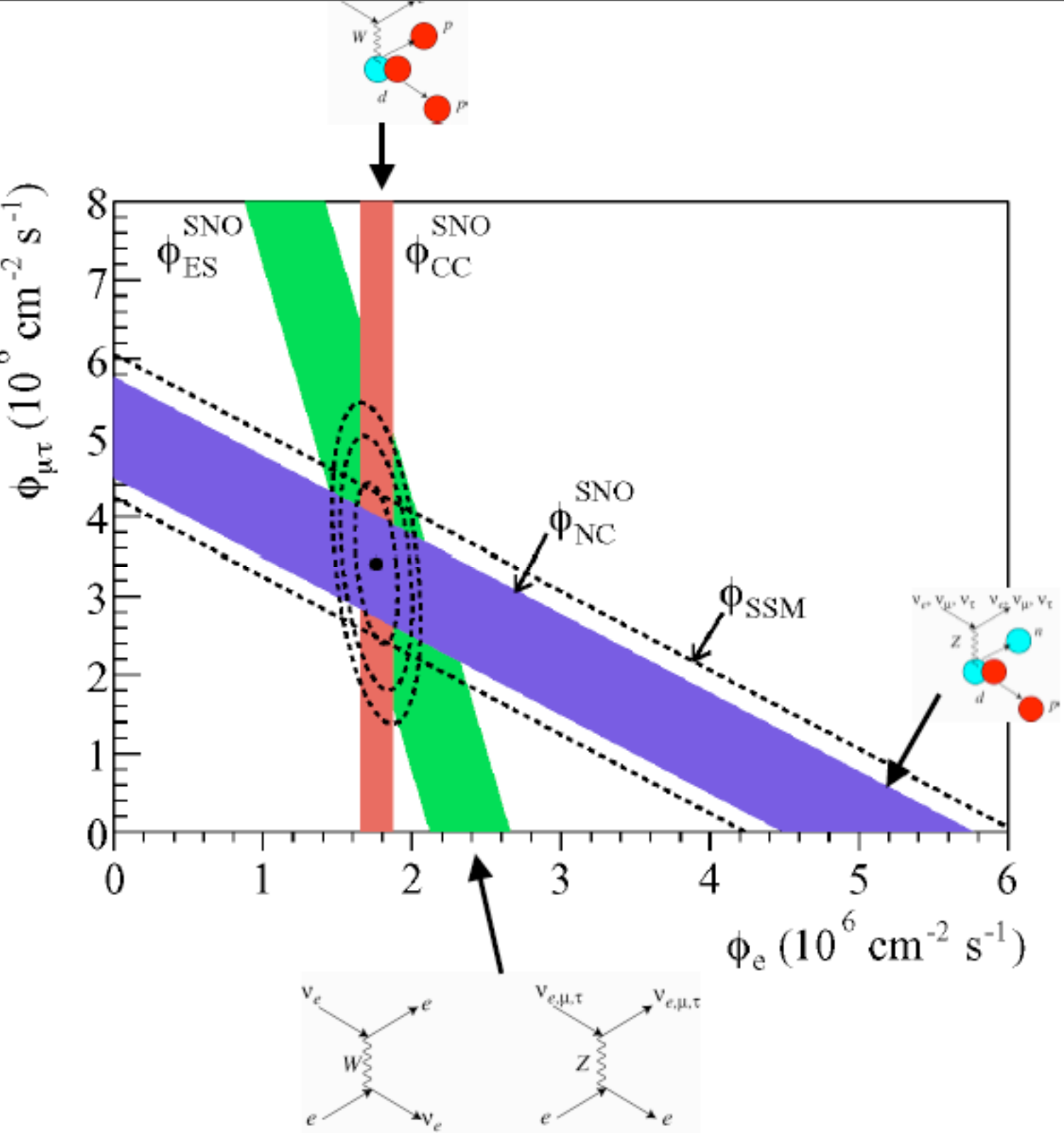

MSW Effect

ν_e NC and CC ν_τ ν_μ NC only

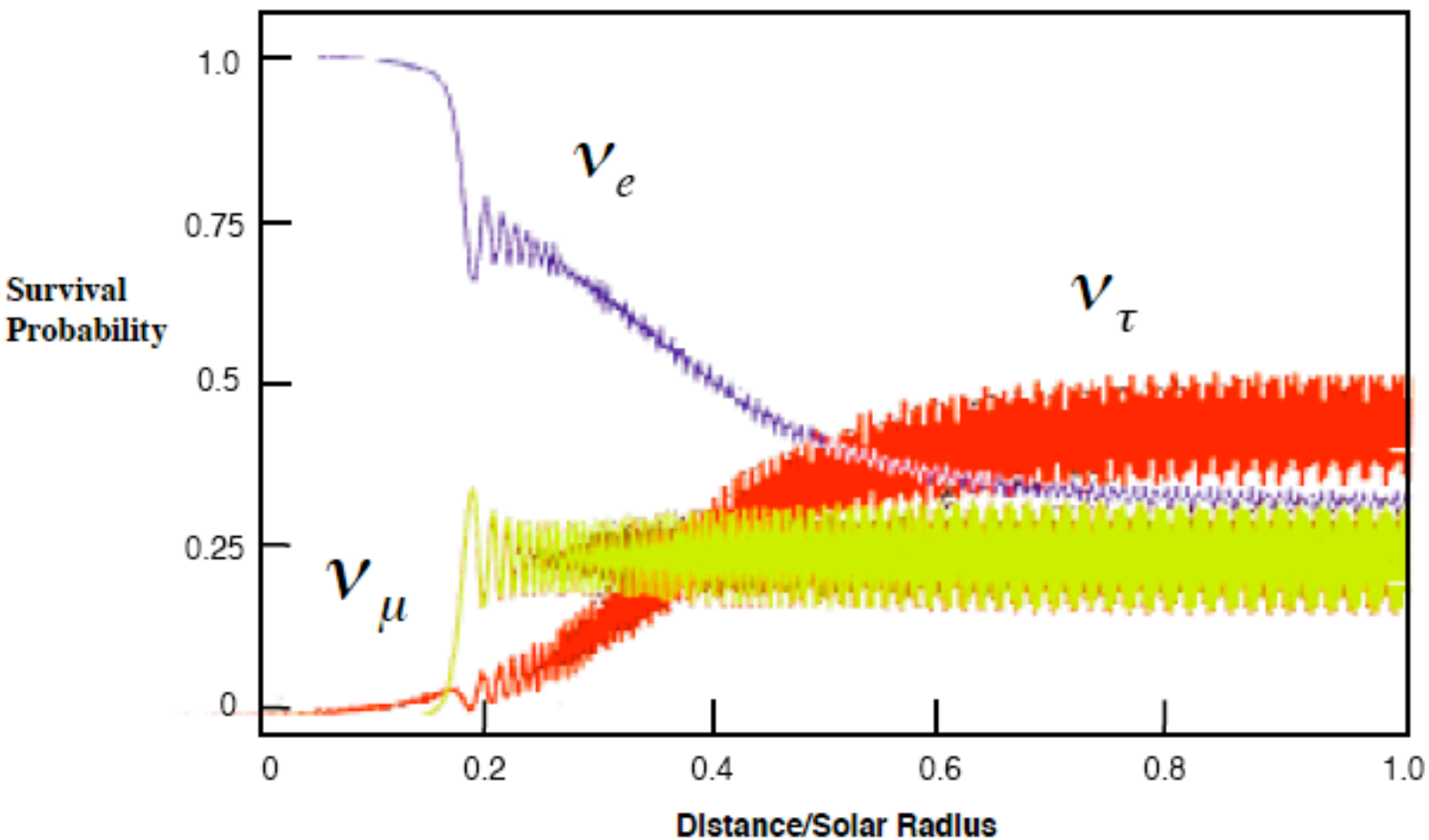

KamLAND

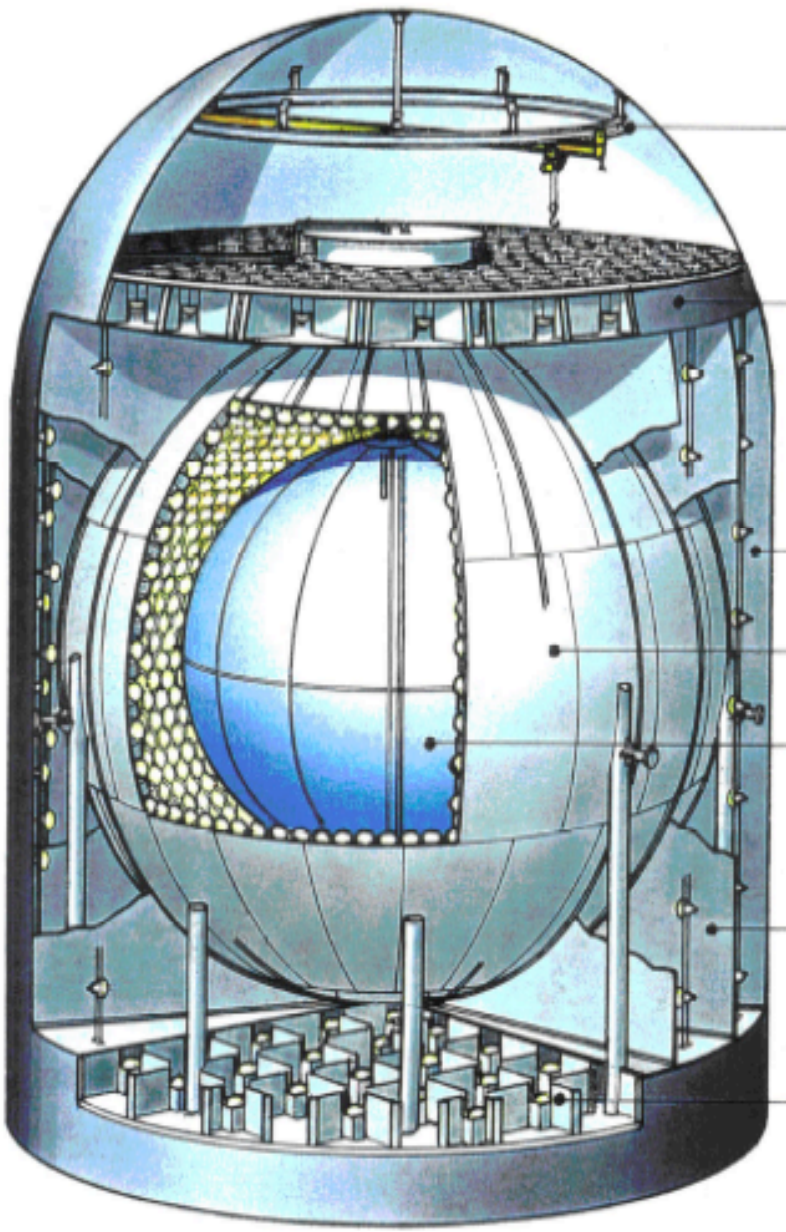

"Dome" Area

Steel Deck

Outer Detector
Water Cherenkov

Steel Sphere

Nylon/EVoH Balloon

Tyvek light baffles

OD PMT's

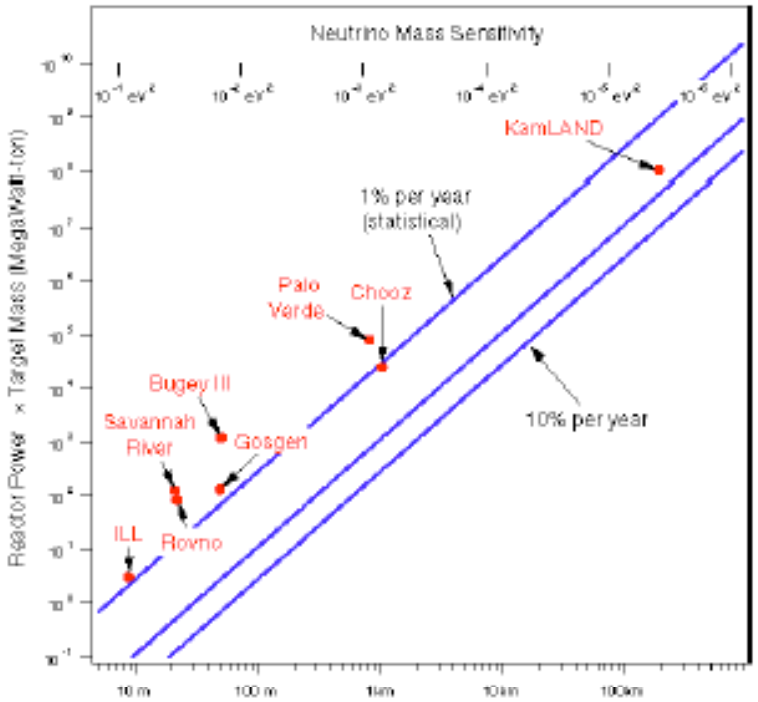



Reactors are prolific sources of anti-neutrinos ~10^{20}/GW_{th}/sec

$$\overline{\nu}_e + p \rightarrow e^+ + n$$

The detection reaction is inverse beta decay. The final state neutron is also detected thru absorption on hydrogen.

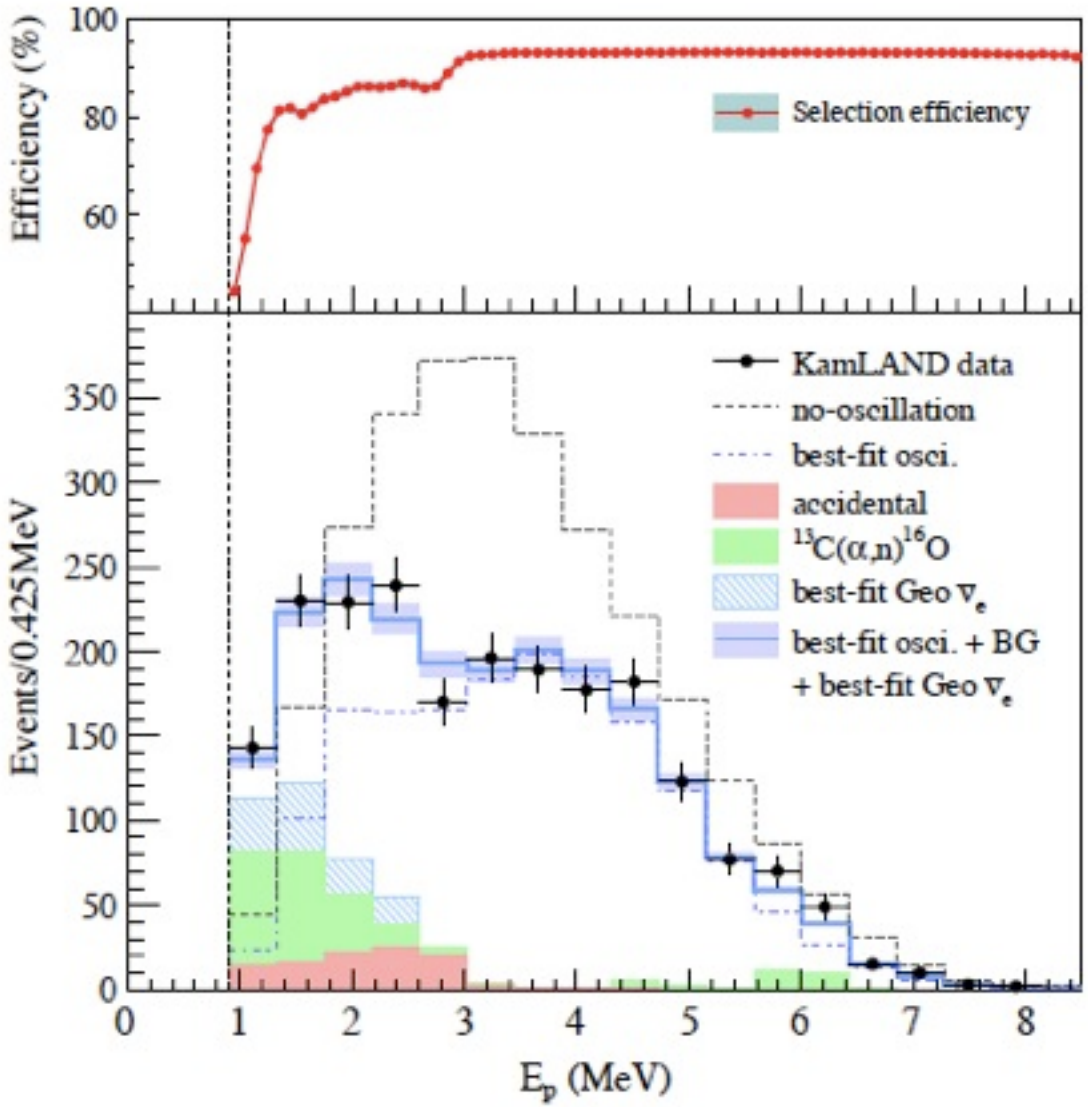

1009:4771

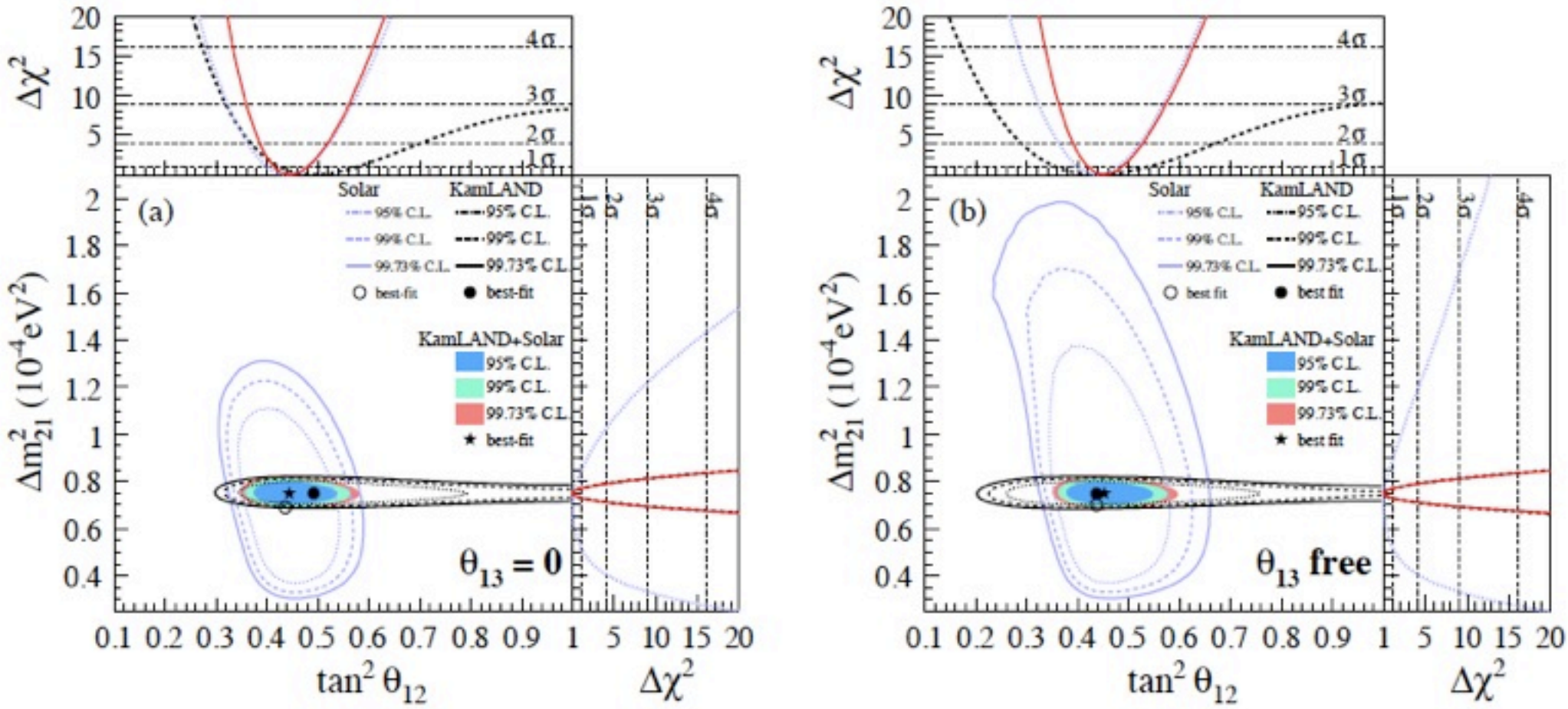

Fit to the entire Solar neutrino and Kamland data

New Age of Accelerator Neutrinos

- For more precise experiments need pure beams of muon type neutrinos (or anti-neutrinos)
- Better controlled characteristics: energy, spectrum, backgrounds, pulsed.
- High energy (>1 GeV) to provide events with long muons. Better resolution.
- Generally called Long Baseline Experiments.

- Prepare a pure beam of muon neutrino beam.
- Aim it towards a large muon detector.
- Observe spectrum of muon neutrinos to see oscillations in energy.



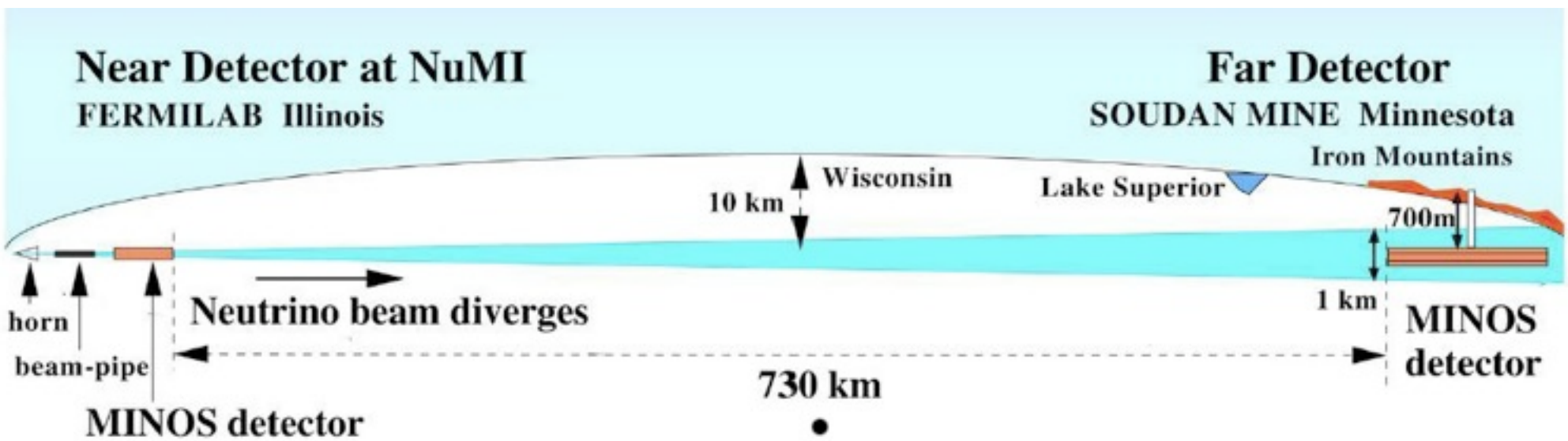

(Fermilab) Main Injector Neutrino Oscillation (MINOS) about to start running.



- ★ **120 GeV protons extracted from the MAIN INJECTOR in a single turn (8.7μs)**
- ★ **1.9 s cycle time**
- ★ ***i.e.* ν beam `on' for 8.7μs every 1.9 s**
- ★ **2.5×10^{13} protons/pulse**
- ★ **0.3 MW on target !**
- ★ **Initial intensity**

2.5×10^{20} protons/year

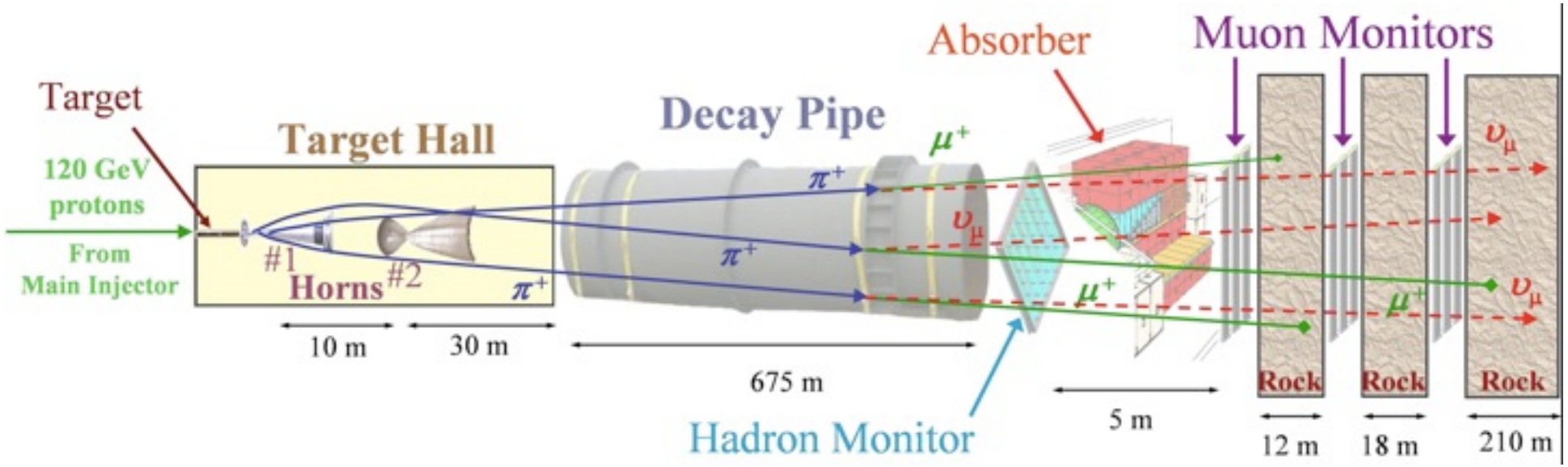

- 120 GeV protons from Main Injector
- Parabolic magnetic horns to sign select pions. Target can be moved to change beam energy.
- 10 μsec pulses/2.2 sec, 3.3×10^{13}protons/pulse
- Beam: ν_μ ~ 91.7%, anti-ν_μ~7%, ν_e~1.3%
- ν_μ and anti-ν_μ measured. ν_e constrained to ~10% with tuned Monte Carlo.

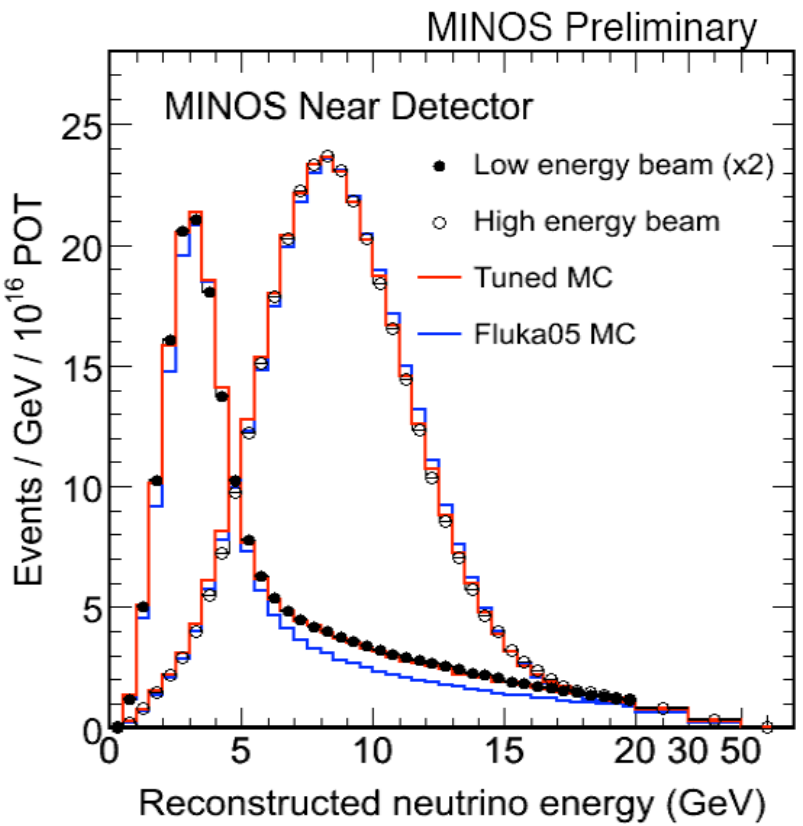



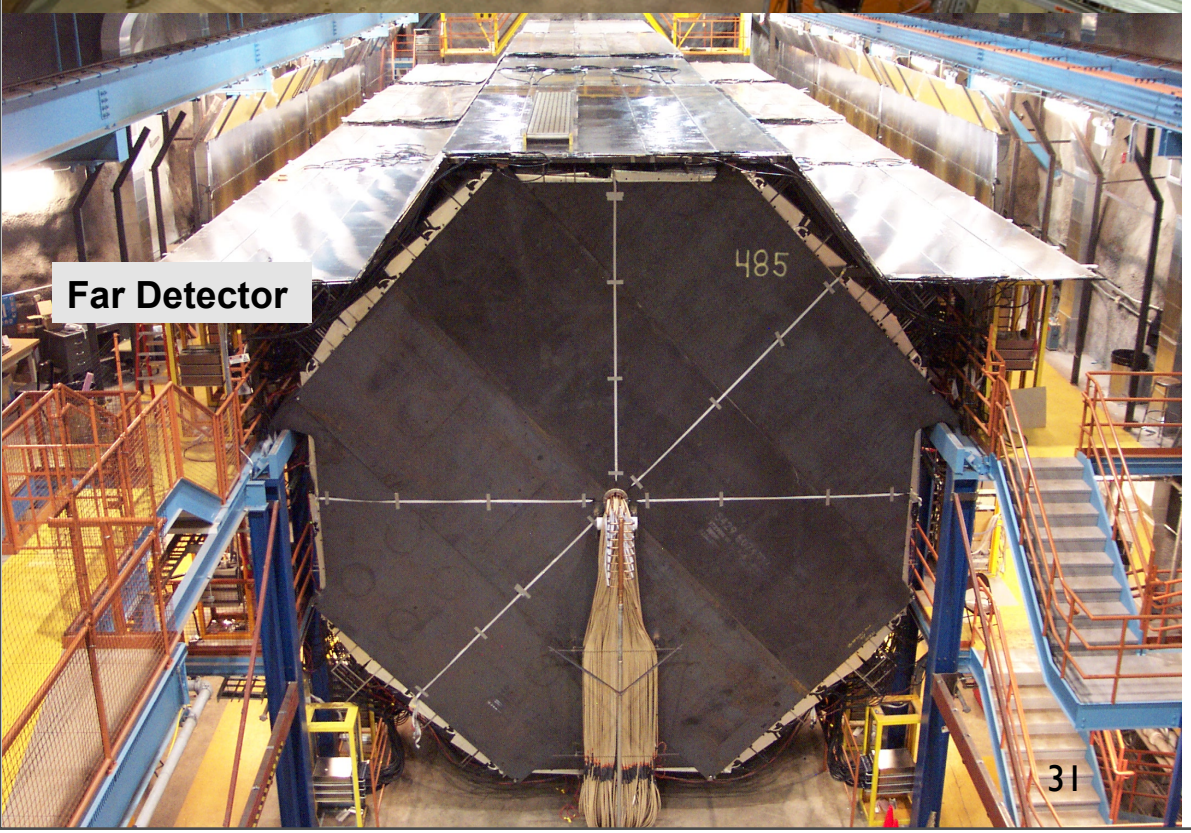

MINOS Detectors

- Massive
  - 1 kt Near detector (small fiducial)
  - 5.4 kt Far detector
- Similar as possible
  - steel planes
    - 2.5 cm thick
    - 1 Muon ~ 27 planes
    - 1.4 radiation lengths
  - scintillator strips
    - 1 cm thick
    - 4.1 cm wide
    - Molier radius ~3.7 cm
  - Wavelength shifting fibre optic readout
  - Multi-anode PMTs
  - Magnetised (~1.3 T)

MINOS near detector events

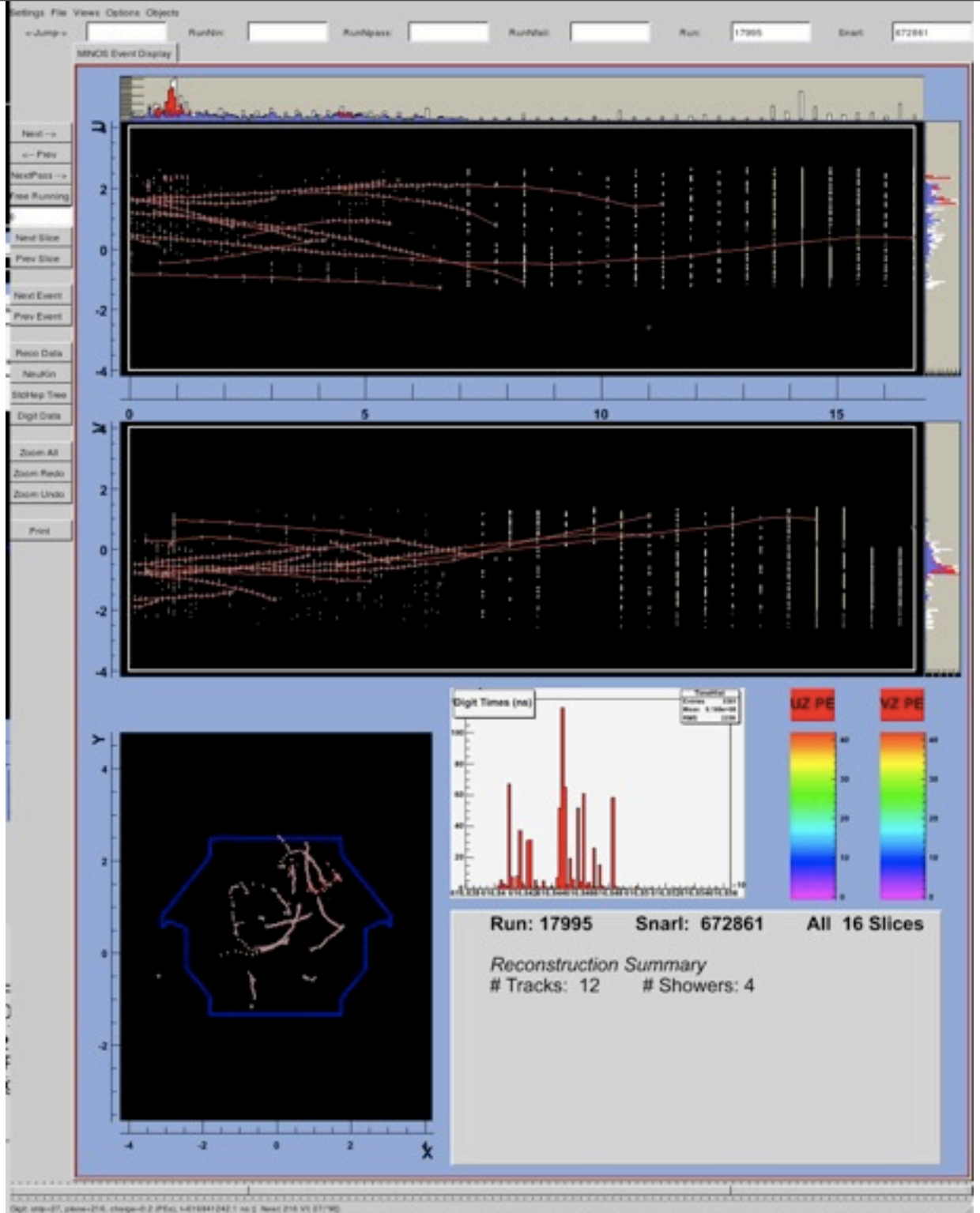

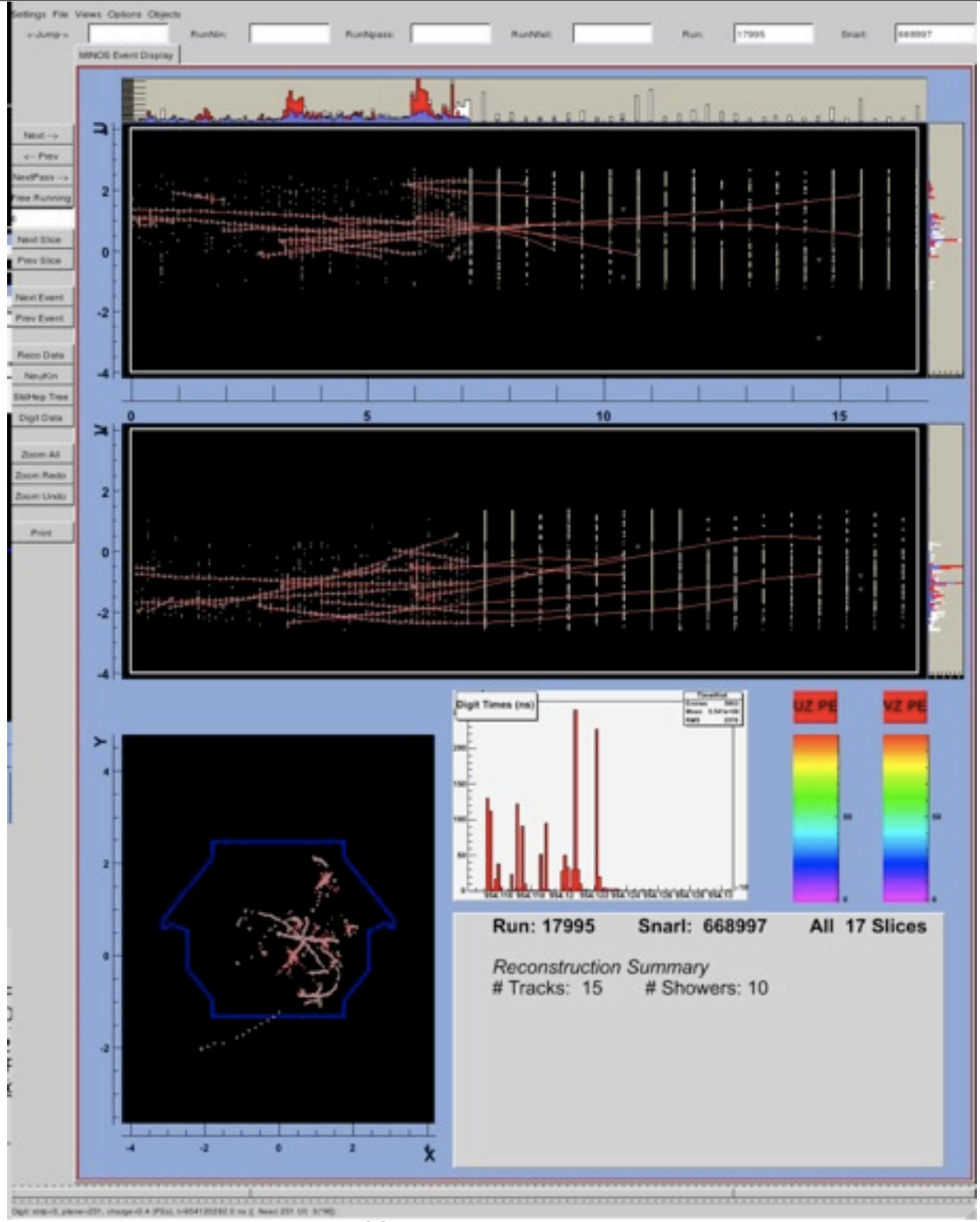
MINOS Event Display
Next ->
<- Prev
NextPass ->
Free Running
Next Slice
Prev Slice
Next Event
Prev Event
Reco Data
NeuKin
StdHep Tree
Digit Data
Zoom All
Zoom Redo
Zoom Undo
Print
U
V
Y
X
Digit Times (ns)
UZ PE
VZ PE
Run: 17995 Snarl: 668997 All 17 Slices
Reconstruction Summary
Tracks: 15 # Showers: 10

MINOS data

7.24x10^{20} POT neutrino running

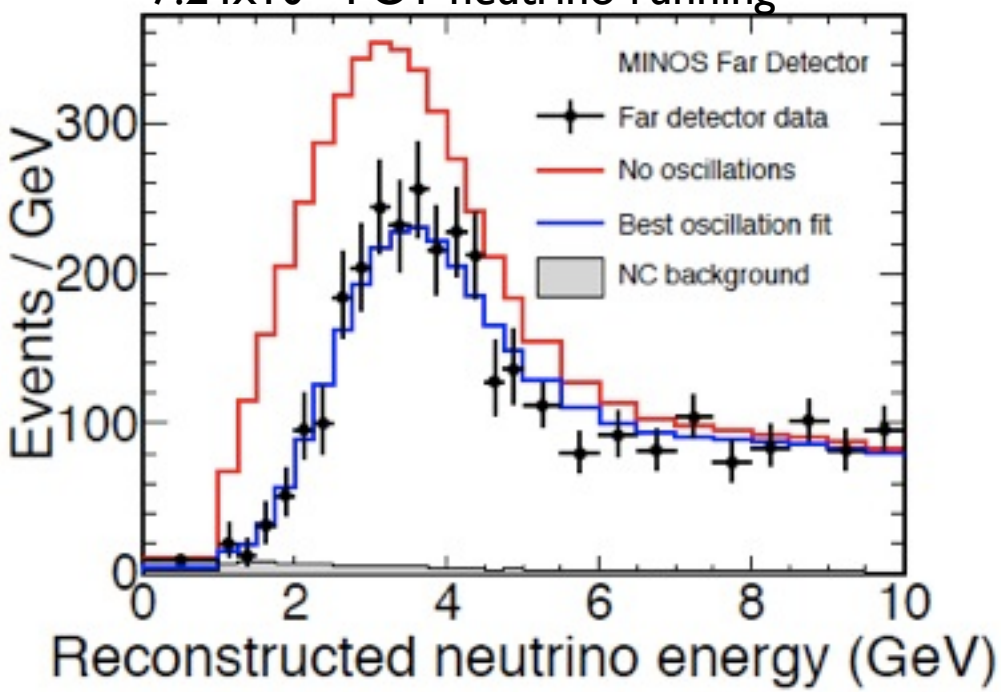

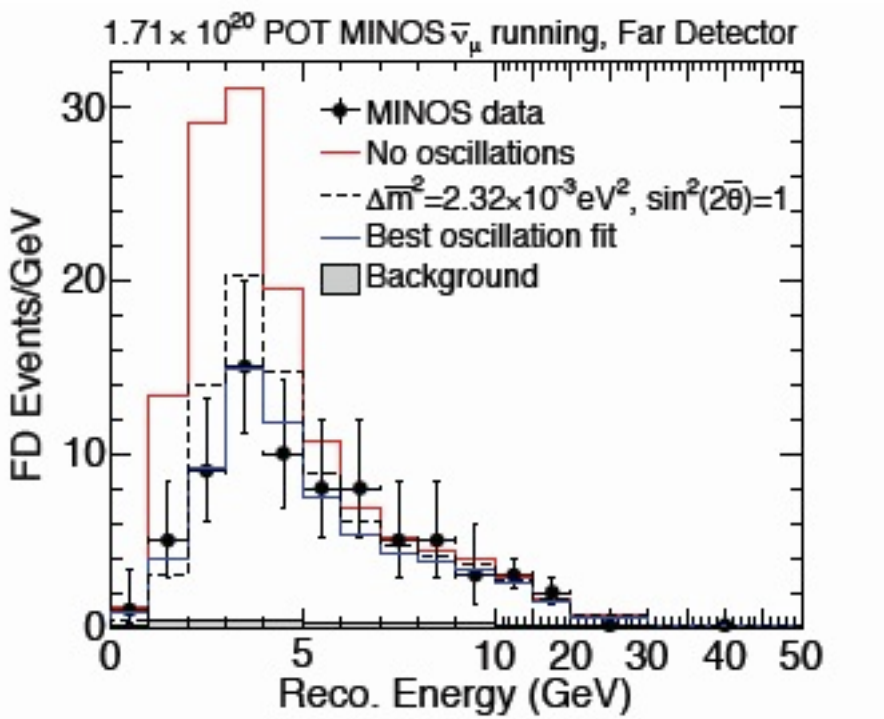

Expect: 2451
Observe: 1986

Expect: 156
Observe: 97

Newest update from last week

Neutrinos and Antineutrinos

$$\left|\Delta\bar{m}^2_{\text{atm}}\right| = 3.36^{+0.46}_{-0.40} \times 10^{-3}\ \text{eV}^2$$

$$\sin^2\left(2\bar{\theta}_{23}\right) = 0.86^{+0.11}_{-0.12}$$

$$\left|\Delta m^2_{\text{atm}}\right| = 2.32^{+0.12}_{-0.08} \times 10^{-3}\ \text{eV}^2$$

$$\sin^2\left(2\theta_{23}\right) > 0.90\ (90\%\ \text{C.L.})$$

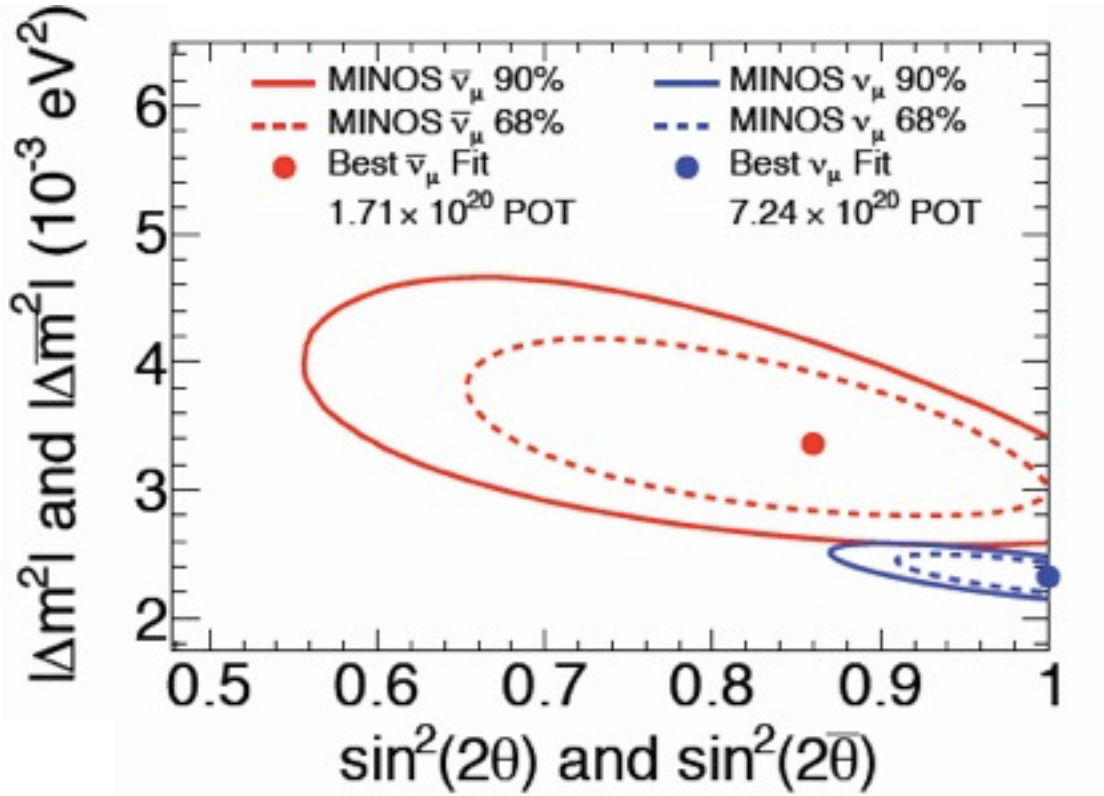

Probability that parameters are identical is 2%

More data is being taken

The Mixing Matrix

Atmospheric Cross-Mixing Solar

$$U = \begin{bmatrix} 1 & 0 & 0 \\ 0 & c_{23} & s_{23} \\ 0 & -s_{23} & c_{23} \end{bmatrix} \times \begin{bmatrix} c_{13} & 0 & s_{13}e^{-i\delta} \\ 0 & 1 & 0 \\ -s_{13}e^{i\delta} & 0 & c_{13} \end{bmatrix} \times \begin{bmatrix} c_{12} & s_{12} & 0 \\ -s_{12} & c_{12} & 0 \\ 0 & 0 & 1 \end{bmatrix}$$

$$\times \begin{bmatrix} e^{i\alpha_1/2} & 0 & 0 \\ 0 & e^{i\alpha_2/2} & 0 \\ 0 & 0 & 1 \end{bmatrix}$$

$c_{ij} \equiv \cos\theta_{ij}$
$s_{ij} \equiv \sin\theta_{ij}$

Majorana ~~CP~~ phases

$\theta_{12} \approx \theta_{sol} \approx 34°$, $\theta_{23} \approx \theta_{atm} \approx 37\text{-}53°$, $\theta_{13} \lesssim 10°$

δ would lead to $P(\overline{\nu}_\alpha \rightarrow \overline{\nu}_\beta) \neq P(\nu_\alpha \rightarrow \nu_\beta)$. ~~CP~~

Since there are 3 neutrinos, there must be a 3X3 matrix with 3 angles and 1 phase (observable) and 2 Δm^2

One Global Fit:

Dominated by

parameter	best fit	2σ	3σ
$\Delta m^2_{21}\ [10^{-5}\mathrm{eV}^2]$	$7.65^{+0.23}_{-0.20}$	7.25–8.11	7.05–8.34
$\lvert\Delta m^2_{31}\rvert\ [10^{-3}\mathrm{eV}^2]$	$2.40^{+0.12}_{-0.11}$	2.18–2.64	2.07–2.75
$\sin^2\theta_{12}$	$0.304^{+0.022}_{-0.016}$	0.27–0.35	0.25–0.37
$\sin^2\theta_{23}$	$0.50^{+0.07}_{-0.06}$	0.39–0.63	0.36–0.67
$\sin^2\theta_{13}$	$0.01^{+0.016}_{-0.011}$	≤ 0.040	≤ 0.056

KamLAND
MINOS
SNO
SuperK
Chooz

arXiv:0808.2016

Schwetz, Tortola, Valle

Not yet updated for newest results.

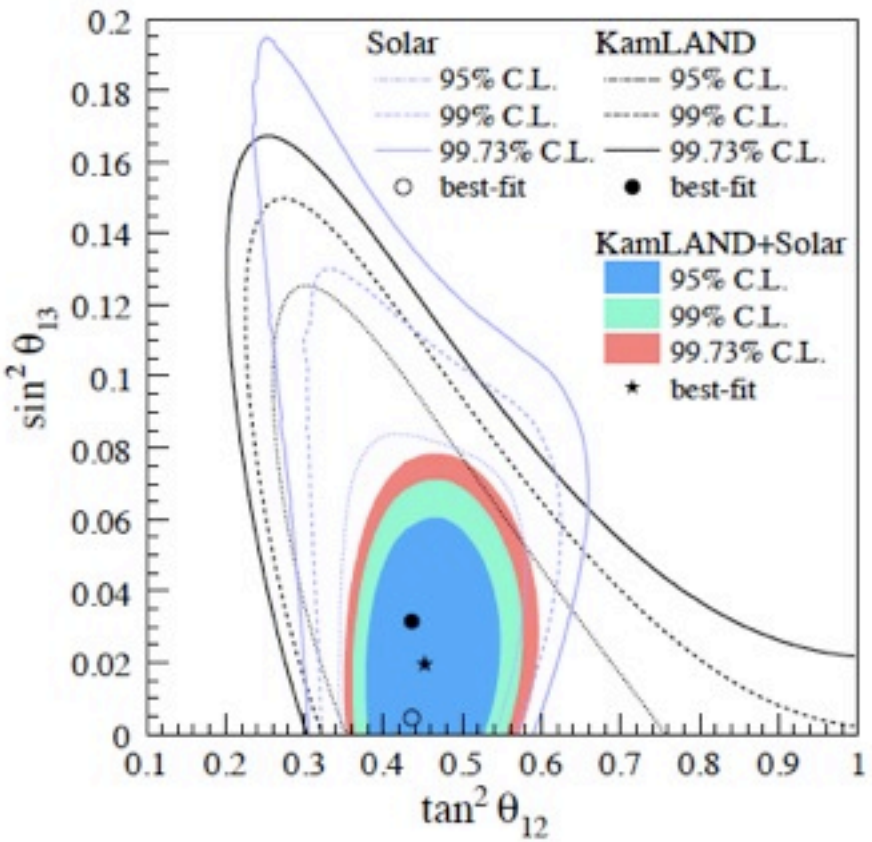

FIG. 3: Allowed regions from the solar and KamLAND data projected in the $(\tan^2\theta_{12}, \sin^2\theta_{13})$ plane for the three-flavor analysis.

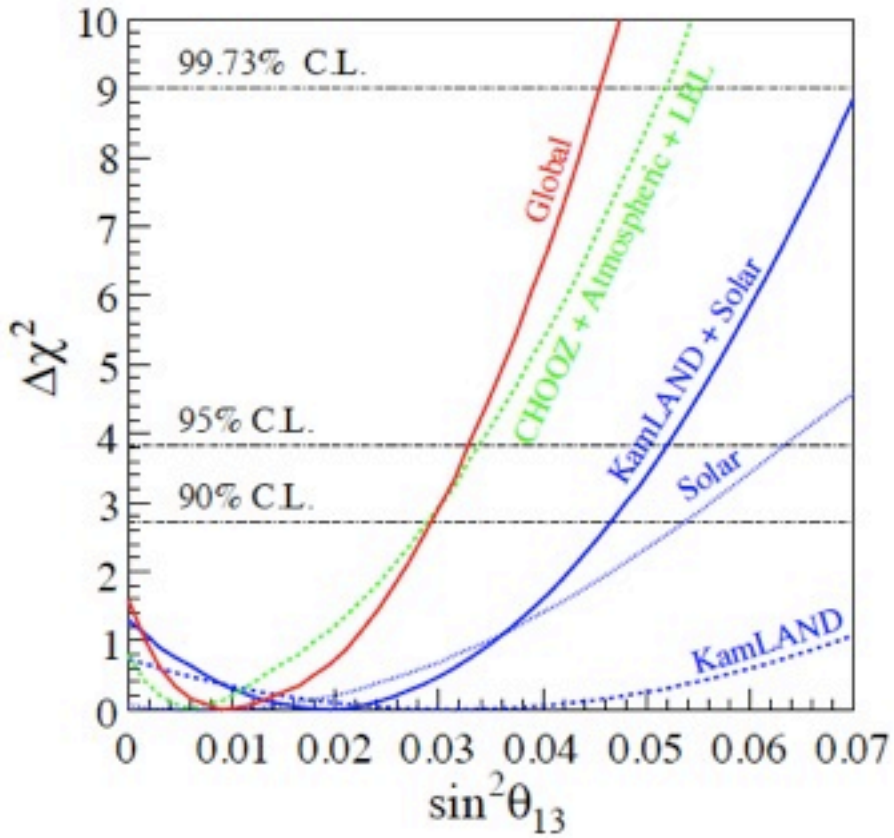

FIG. 4: $\Delta\chi^2$-profiles projected onto the $\sin^2\theta_{13}$ axis for different combinations of the oscillation data floating the undisplayed parameters $(\tan^2\theta_{12}, \Delta m^2_{21})$.

- Solar and Reactor data has weak evidence for the last mixing angle: Theta_13

Θ_{13} Updates

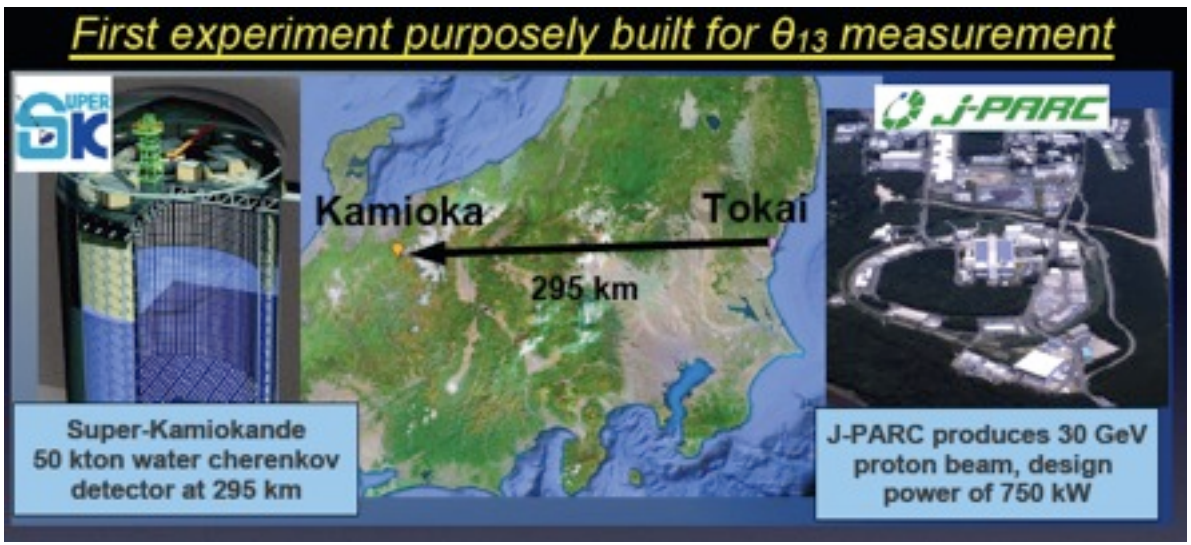

3.23×10^{19} POT

1 ν_e observed

8 ν_μ observed

have 4x data

Earthquake will cause delays

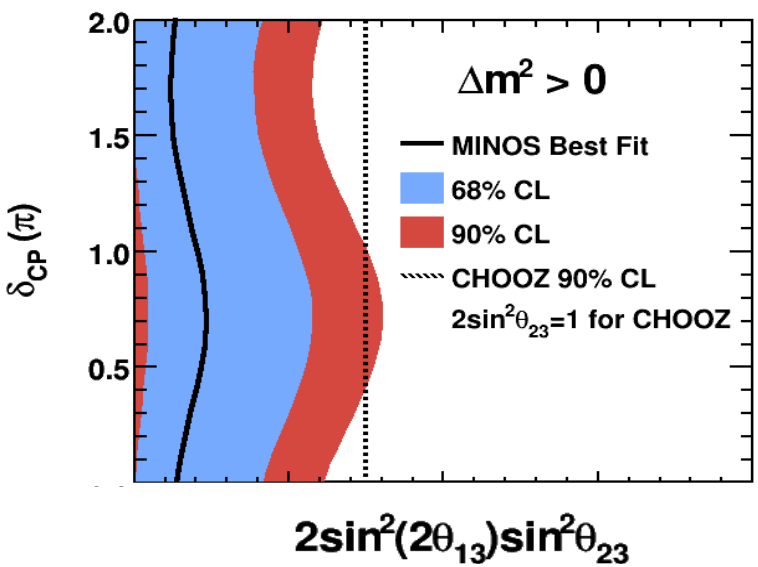

MINOS

New analysis is on way

for $\delta_{CP} = 0, \sin^2(2\theta_{23}) = 1,$

$|\Delta m^2_{32}| = 2.43 \times 10^{-3}$ eV^2

$\sin^2(2\theta_{13}) < 0.12$ normal hierarchy

$\sin^2(2\theta_{13}) < 0.20$ inverted hierarchy

at 90% C.L.

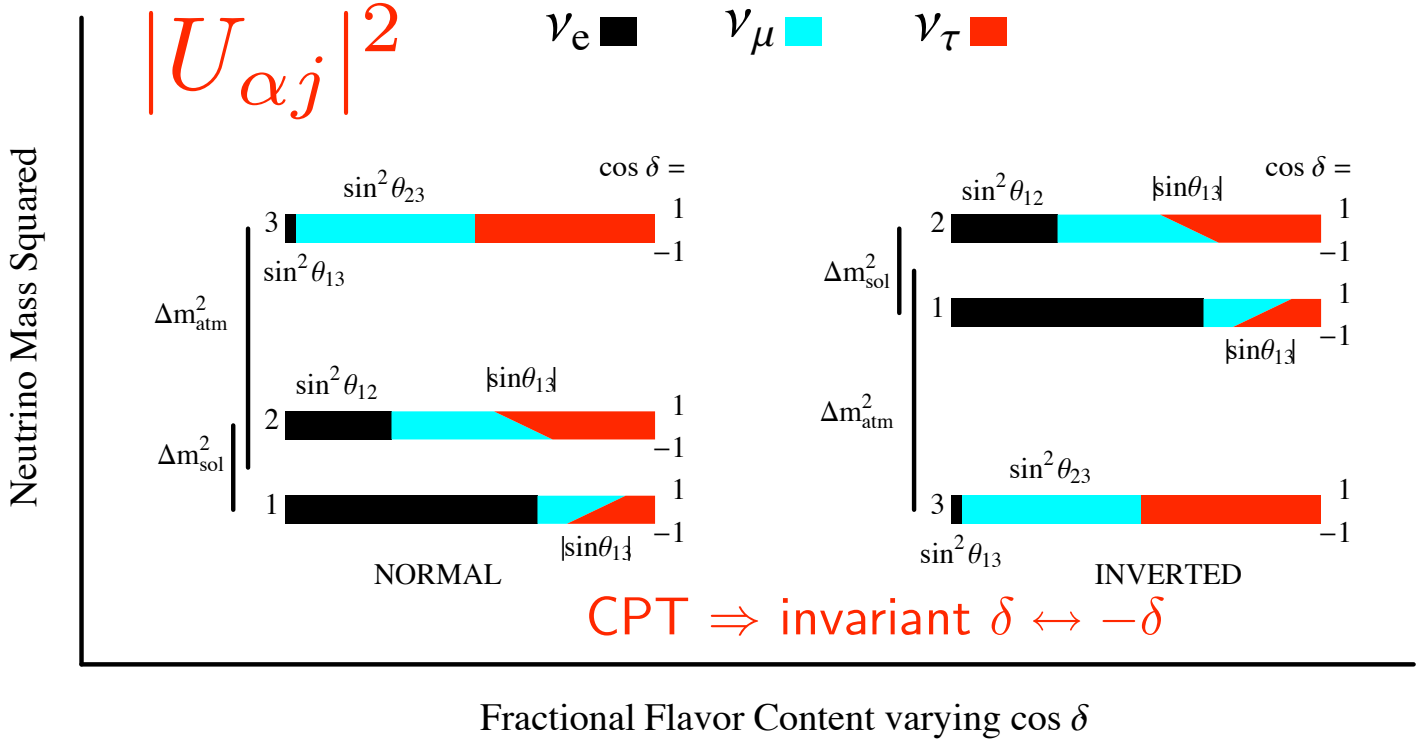

$\delta m^2_{sol} = +7.6 \times 10^{-5}\ eV^2$

$|\delta m^2_{atm}| = 2.4 \times 10^{-3}\ eV^2$

$|\delta m^2_{sol}|/|\delta m^2_{atm}| \approx 0.03$

$\sqrt{\delta m^2_{atm}} = 0.05\ eV < \sum m_{\nu_i} < 0.5\ eV = 10^{-6} * m_e$

$\sin^2\theta_{12} \sim 1/3$

$\sin^2\theta_{23} \sim 1/2$

$\sin^2\theta_{13} < 3\%$

$0 \leq \delta < 2\pi$

parke

Long Range Interactions

- Diversion to illustrate the power of interferometry using the MINOS nu-antinu discrepancy.
- What could distinguish nu and antinu ?
- A new charge and very feeble interaction that distinguishes flavor ?
- Davoudiasl, Lee, Marciano. Other work: Joshipura, Mohanty(2003), others...

- An ultra-light z' boson and very feeble interaction.
- Must work over astronomical scales.
- Postulate a charge: $Q = (B-L)+(L_\mu - L_\tau)$

	e-	Proton	Neutron	ν_μ	ν_τ
Q	-1	1	1	0	-2

Potential due to neutrons in the Sun and Earth

Put $M_z = 10^{-18}$ eV,

$$V_n = \alpha' \left(\frac{N_n^{\oplus}}{R_{\oplus}} + \frac{N_n^{\odot}}{R_{ES}} \right) = 2.24 \times 10^{-12} \text{ eV} \left(\frac{\alpha'}{10^{-50}} \right) \left[0.25 + \left(\frac{R_{AU}}{R_{ES}} \right) \right]$$

$N_n^{\odot} = 1.70 \times 10^{56}$ and $N_n^{\oplus} = 1.78 \times 10^{51}$.

$R_{\oplus} = 6.4 \times 10^3$ km

$R_{ES}^a \simeq 1.52 \times 10^8$ km, aphelion ($\sim$ July 4)

$R_{ES}^p \simeq 1.47 \times 10^8$ km, perihelion ($\sim$ January 4).

Phenomenology is same as MSW

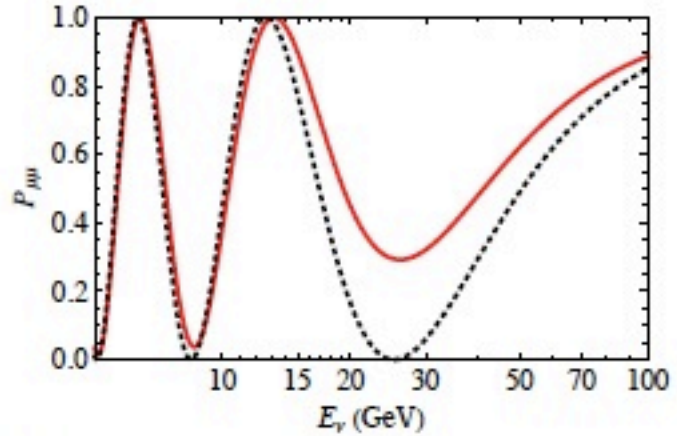

(a)

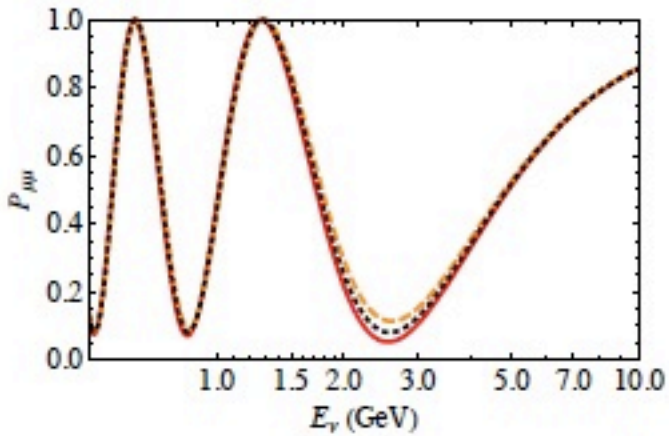

(b)

Above: SM (black dotted), LRI (red solid) with $\Delta m^2_{23} = 2.45 \times 10^{-3}$ eV^2 and $\alpha' = 0.5 \times 10^{-52}$. (a) $L = 2 \times 6400$ km (DEEPCORE experiment) with $\sin^2(2\theta_{23}) = 1$. (b) $L = 1300$ km (DUSEL) with $\sin^2(2\theta_{23}) = 0.92$. ν: red solid, $\bar{\nu}$: dashed orange. Below: $\alpha' = 1.0 \times 10^{-52}$

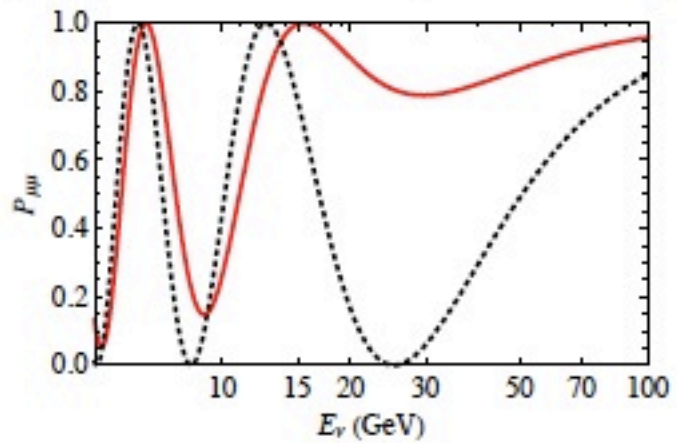

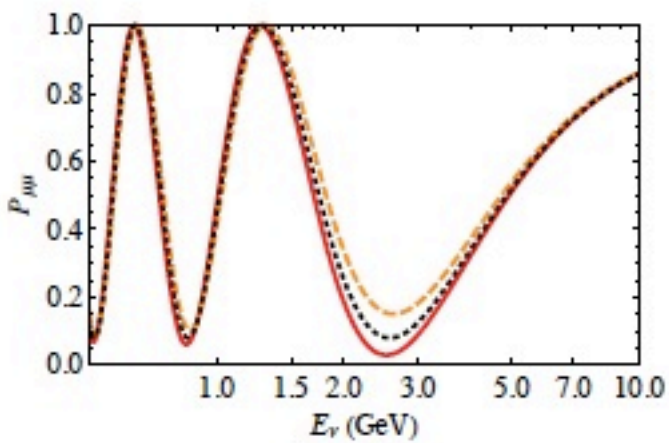

Limit on α' is already <5 x 10^{-52} from rough fit current MINOS data. Weaker than gravity ! Neutrinos may be the only window on such interactions.

Must see full consequence of oscillations

- Must see multiple nodes in a spectrum for precise measurements
- Need E: 1-6 GeV
- Need ~2000 km
- Need intense beam.
- Need very large (200kTon) detector to get enough events
- Must place detector underground

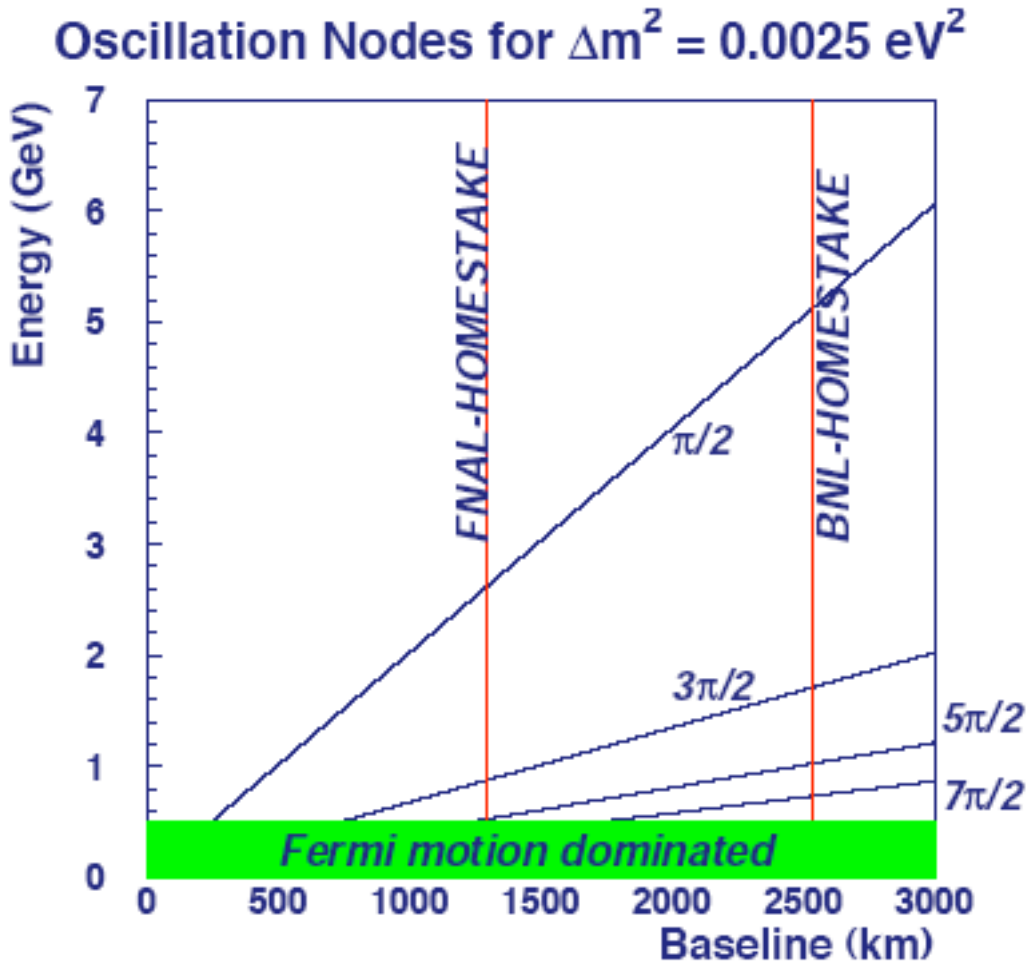

(M. Diwan, hep-ex/0407047)

Long-Baseline Neutrino Experiment

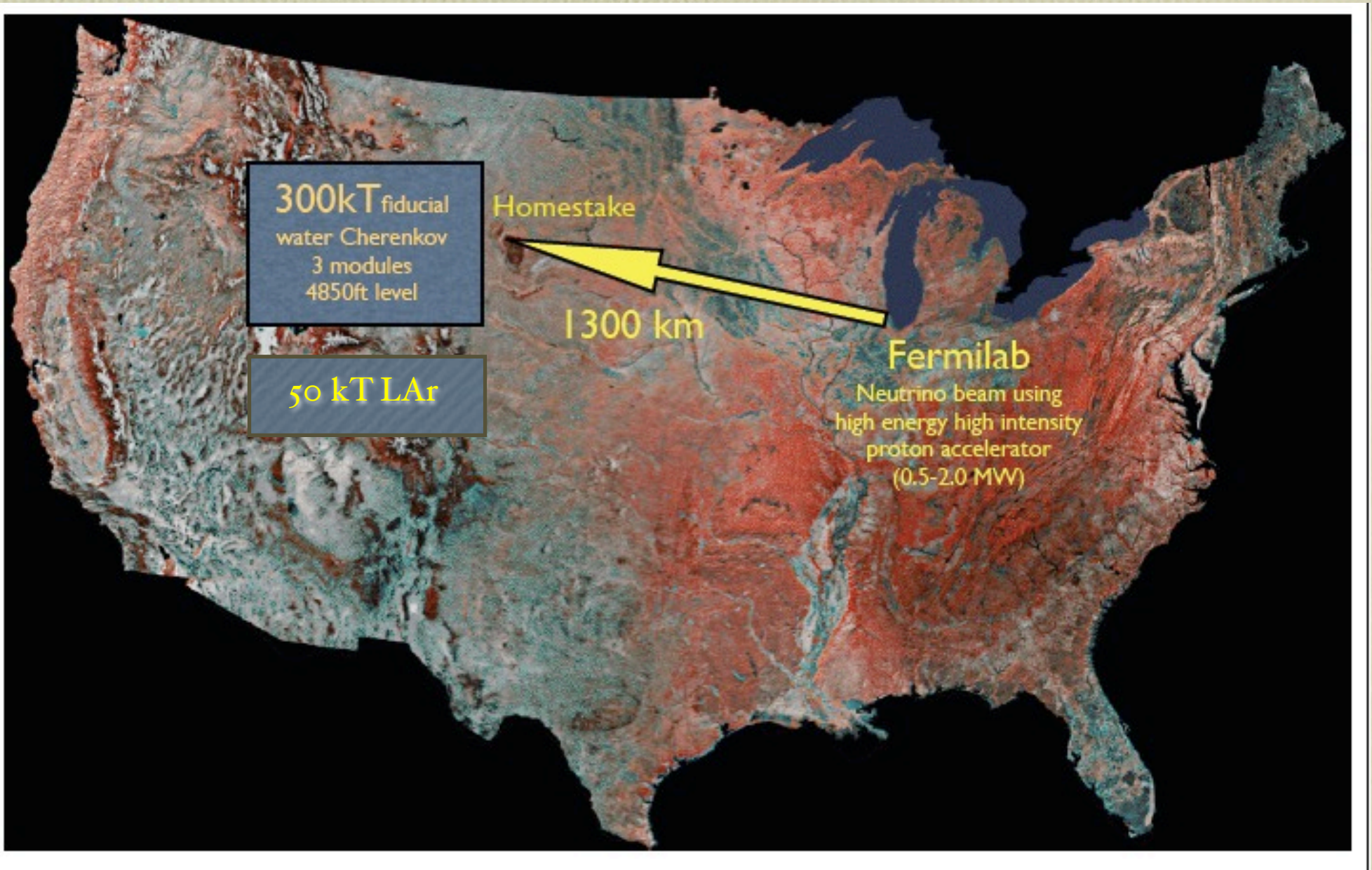

Office of Science
U.S. DEPARTMENT OF ENERGY

BROOKHAVEN
NATIONAL LABORATORY

$\nu_\mu \to \nu_e$ with matter effect

Approximate formula (M. Freund)

matter effect ~E

$$P(\nu_\mu \to \nu_e) \approx \sin^2\theta_{23}\frac{\sin^2 2\theta_{13}}{(\hat{A}-1)^2}\sin^2((\hat{A}-1)\Delta)$$

~7500 km
no CPV.
magic bln

$$+\alpha\frac{8J_{CP}}{\hat{A}(1-\hat{A})}\sin(\Delta)\sin(\hat{A}\Delta)\sin((1-\hat{A})\Delta)$$

CPV term approximate dependence ~L/E

$$+\alpha\frac{8I_{CP}}{\hat{A}(1-\hat{A})}\cos(\Delta)\sin(\hat{A}\Delta)\sin((1-\hat{A})\Delta)$$

$$+\alpha^2\frac{\cos^2\theta_{23}\sin^2 2\theta_{12}}{\hat{A}^2}\sin^2(\hat{A}\Delta)$$

solar term

linear dep.

$$J_{CP} = 1/8\sin\delta_{CP}\cos\theta_{13}\sin 2\theta_{12}\sin 2\theta_{13}\sin 2\theta_{23}$$

$$I_{CP} = 1/8\cos\delta_{CP}\cos\theta_{13}\sin 2\theta_{12}\sin 2\theta_{13}\sin 2\theta_{23}$$

$$\alpha = \Delta m^2_{21}/\Delta m^2_{31},\ \Delta = \Delta m^2_{31}L/4E$$

$$\hat{A} = 2VE/\Delta m^2_{31} \approx (E_\nu/GeV)/11$$ For Earth's crust.

CP asymmetry grows as th13 becomes smaller

Technology for the new experiment

- An experimental project of this kind needs and affects technical development in many fields.
- Material science: a high intensity/radiation target must be developed.
- Glass/ceramics: Photomultiplier tubes that can withstand ultrapure water at high pressure must be developed.
- Biology: need to keep water clean !
- Understanding cryogenics on a large scale underground
- Underground construction: Deep stable caverns in hard rock. The scales needed are new for engineering.
- Accelerator science: new very high intensity beams.

The Neutrino Beam Facility at Fermilab

Start with a 700 kW beam, and then take profit of the significantly increased beam power (2.3 MW) available with Project X

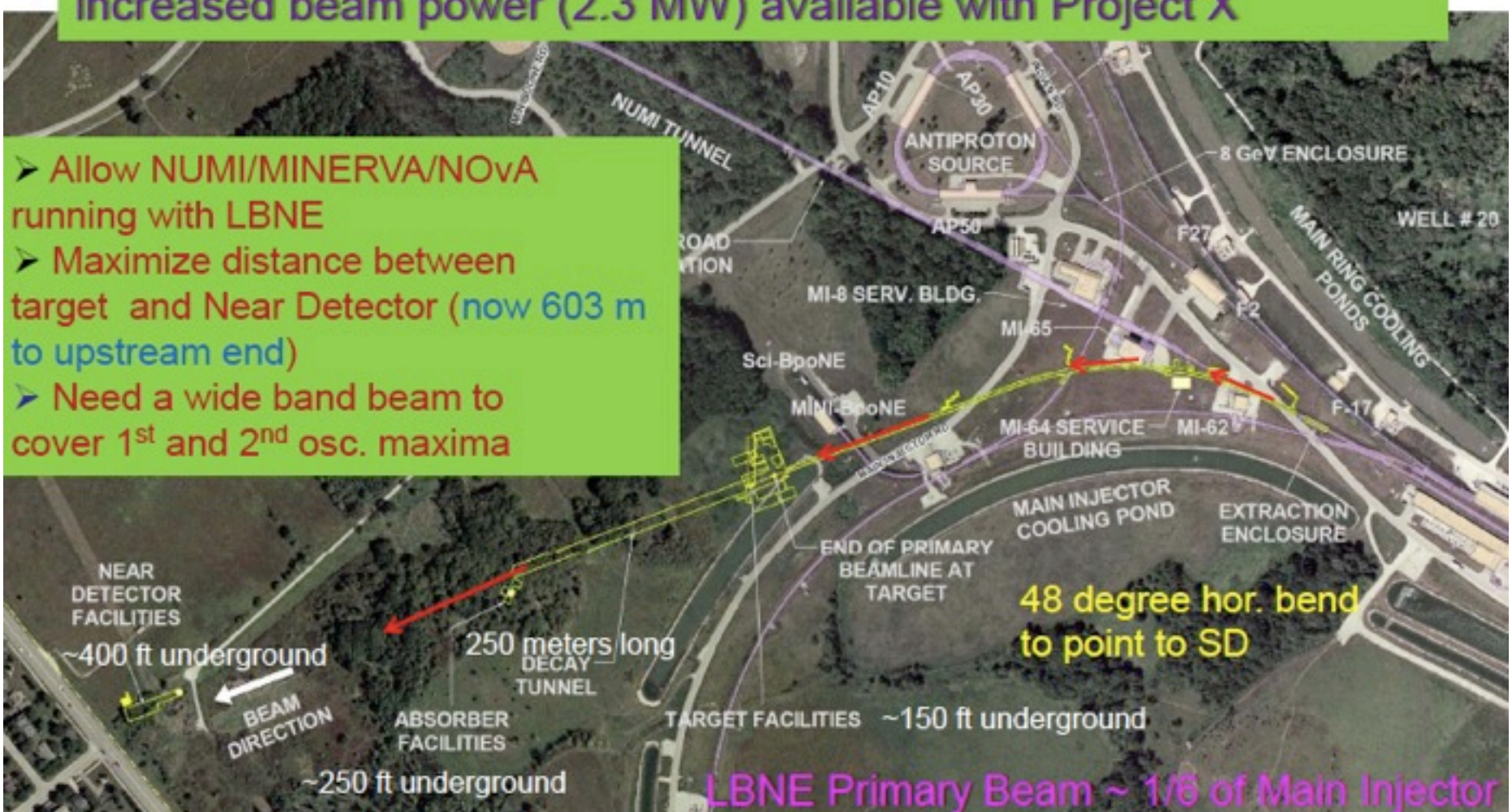

Primary beam energy (protons from the Main Injector) from 60 to 120 GeV

Design is becoming quite detailed and documented

New above ground design at FNAL

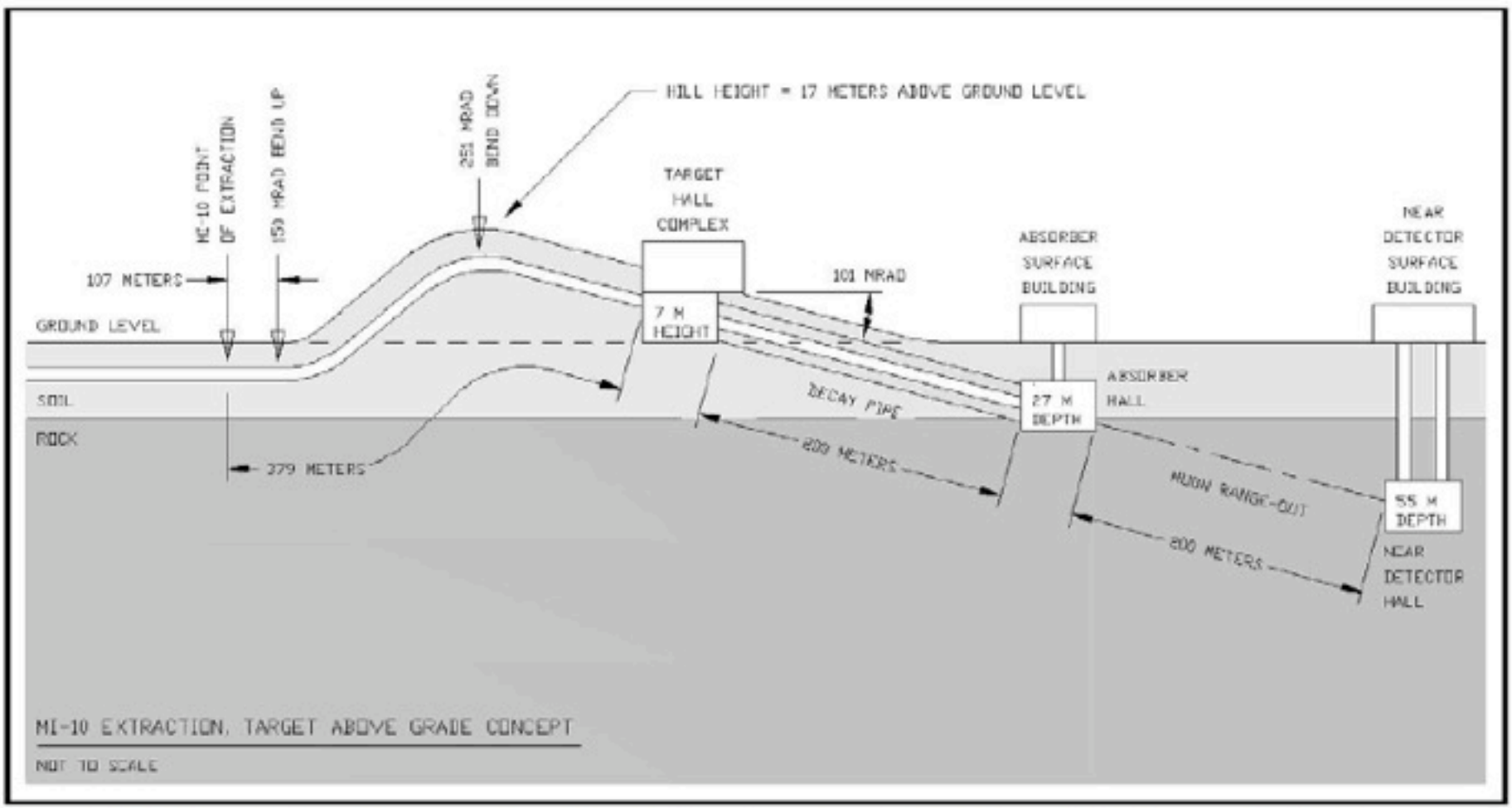

Fig. 1: LBNE neutrino beam configuration for extraction at MI-10 and the target hall above grade



Progress on the Homestake site



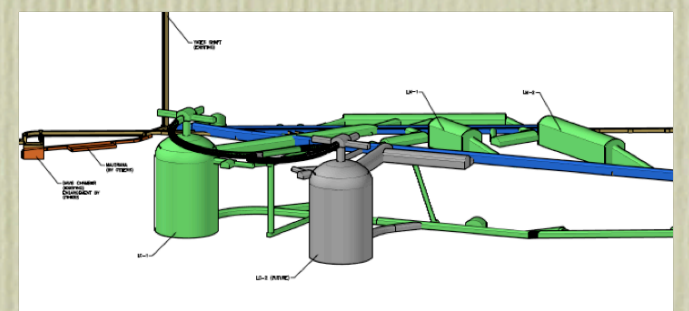

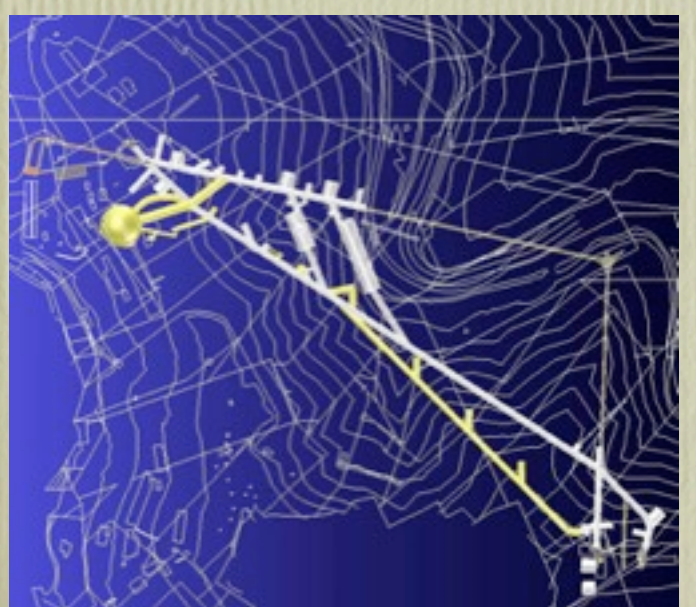

- A large NSF funded team is in place at Berkeley and SD. Goal is to achieve 2013 start for construction (MREFC).
- Surface campus assessment complete.
- Underground infrastructure assessment and basis of est. complete
- Geotechnical assessment complete with boreholes and rock studies.
- Many consulting companies onboard.
- Large Cavity Advisory Board has reported very positively.

Water Cherekov Detector: 2 modules of 100 kton each with ~50000 PMTs each

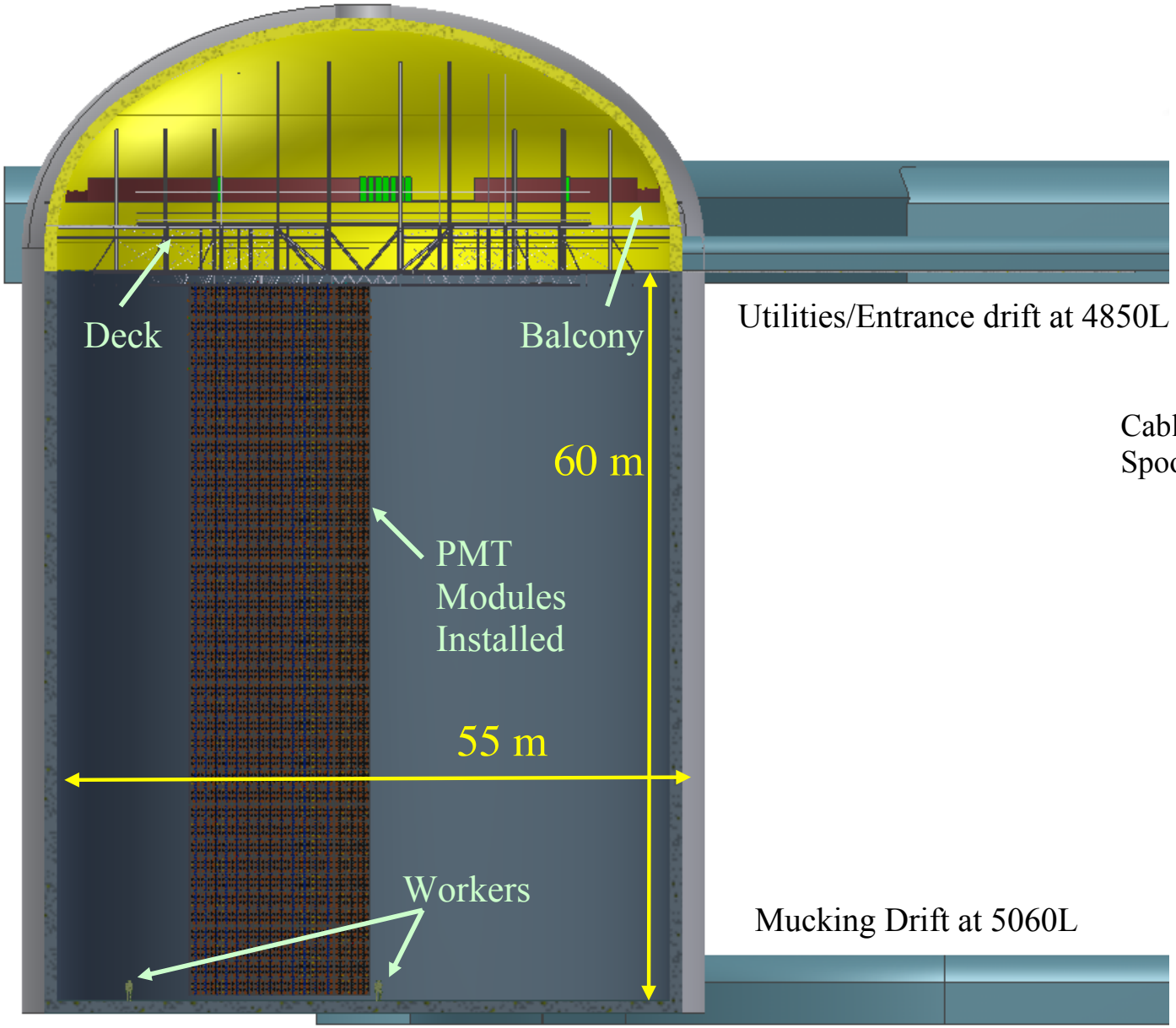

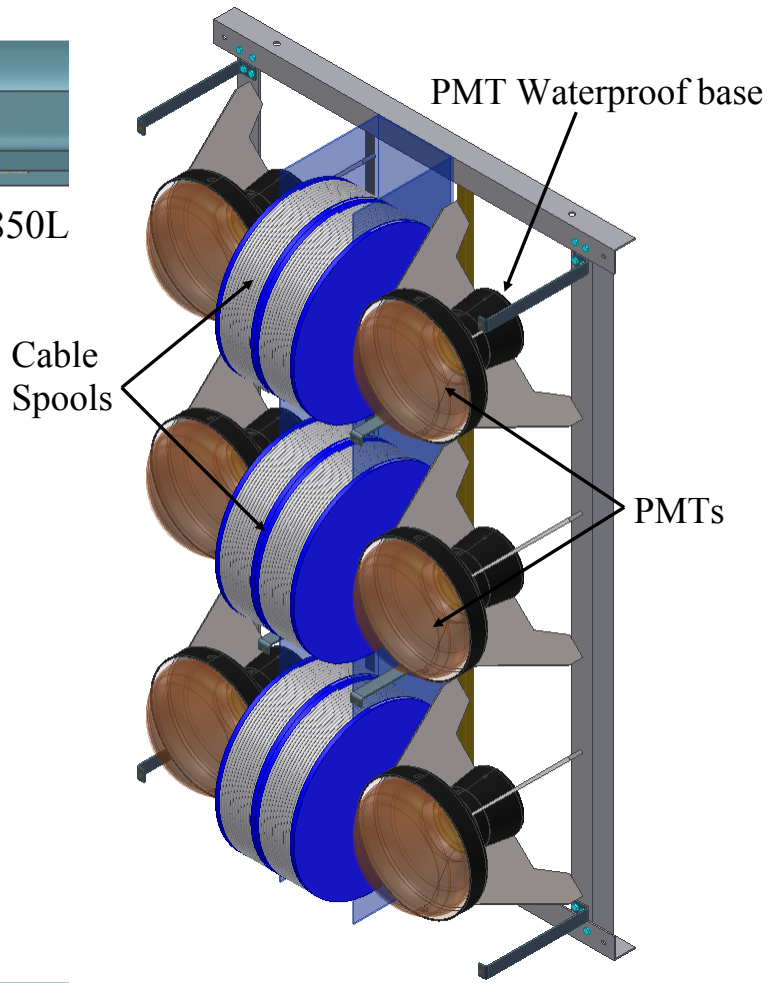

Rather detailed simulation exists due to simulation group led by C.Walter and Ion Stancu

New underground plan: single 200 kTon detector

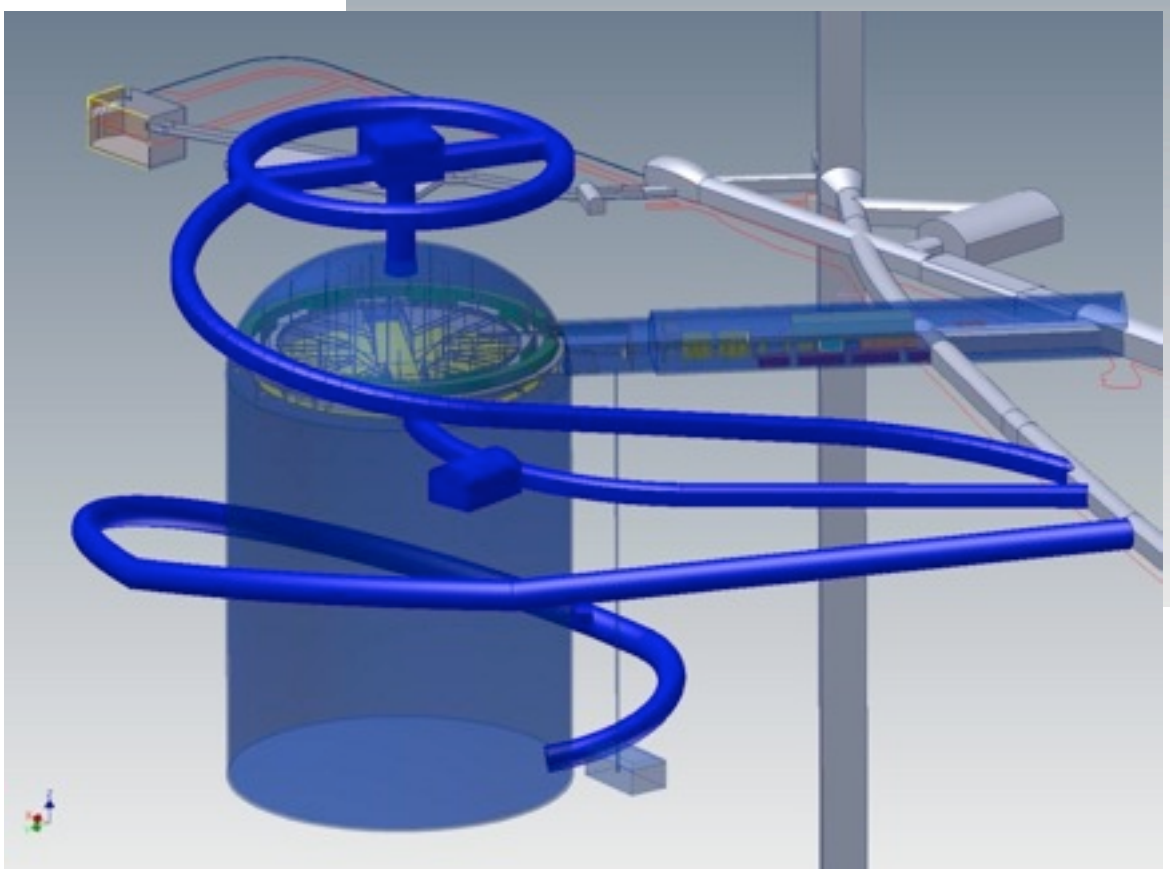

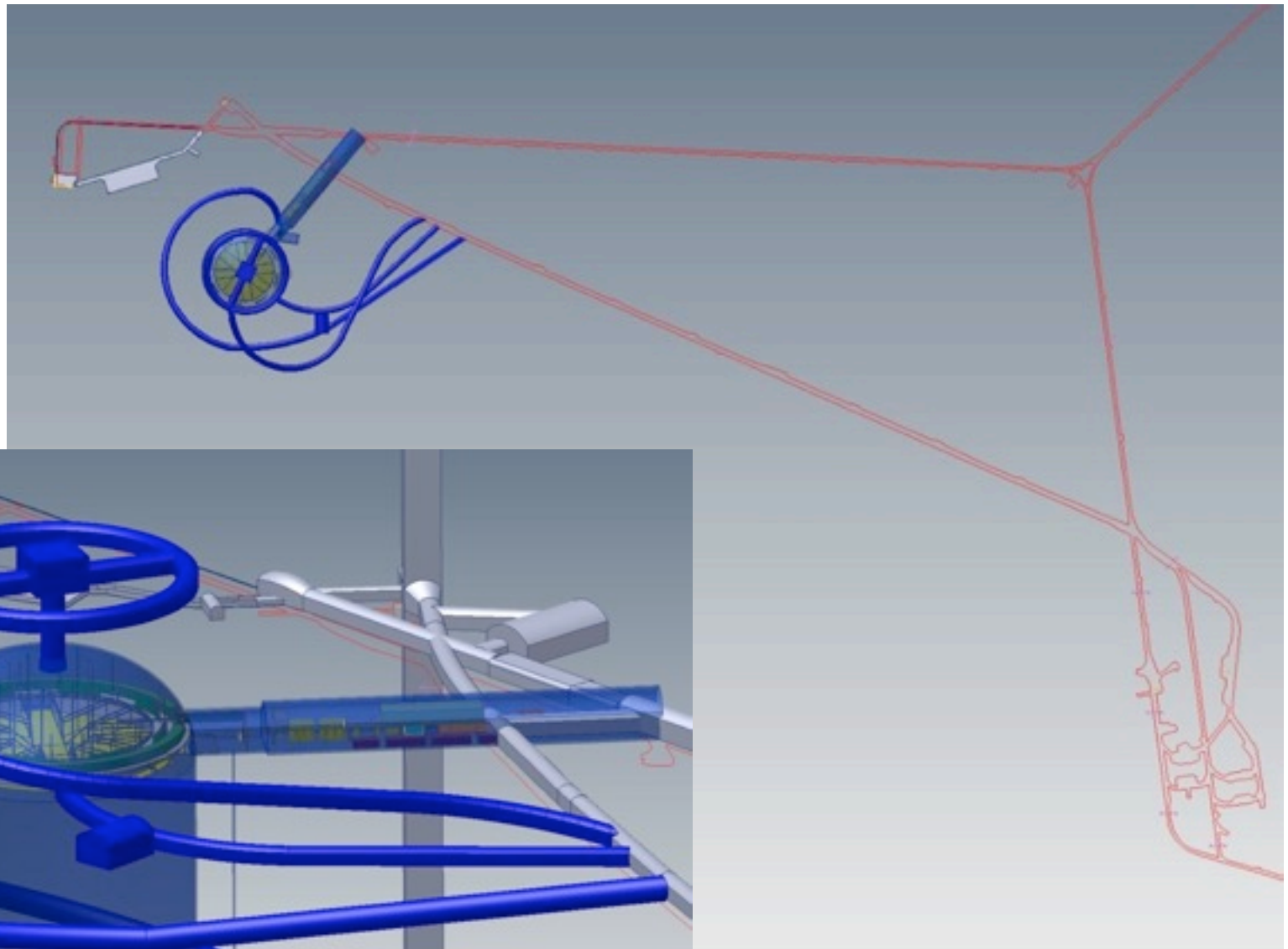

29000 12 inch tubes
Installed on steel cables

Liquid argon detector

- Agreed on a preferred design
  - Reference Design3a – membrane cryostat with cold electronics
  - Located on the 800 level
  - Cosmic ray veto
  - Agreed on 3mm wire spacing
  - Agreed on three wire planes + 1 un-instrumented grid plane
  - Details given in Reference Design talk



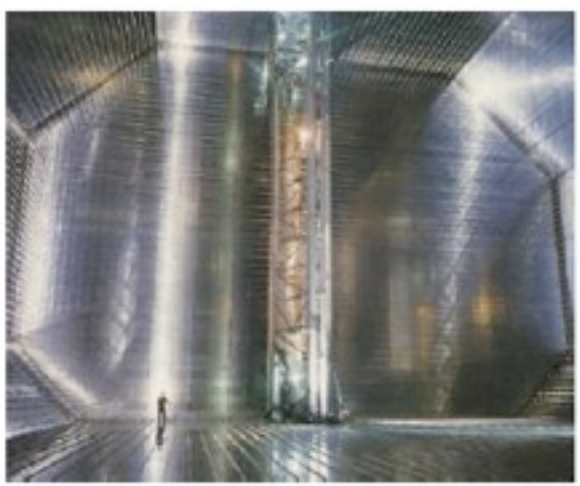

Baller

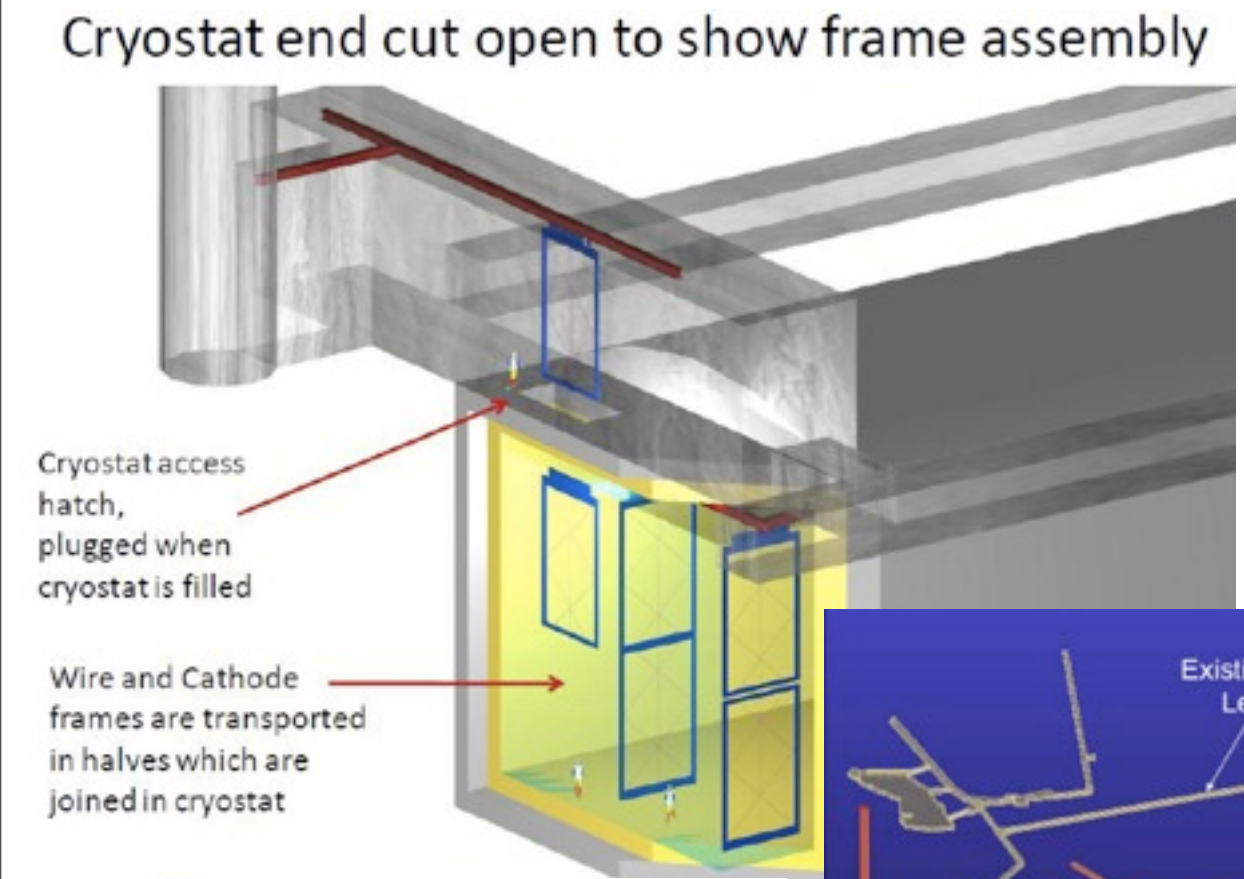

800 ft depth with an active veto shield. Simulation and performance based on Argoneut

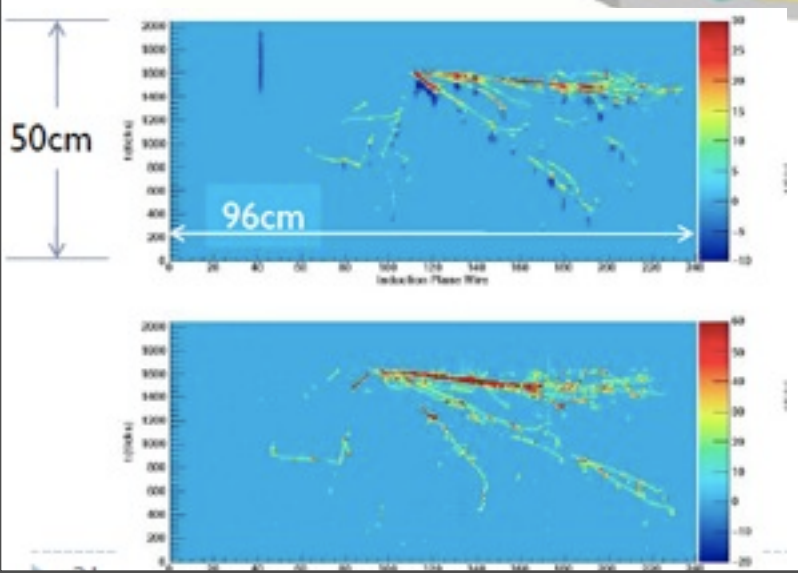

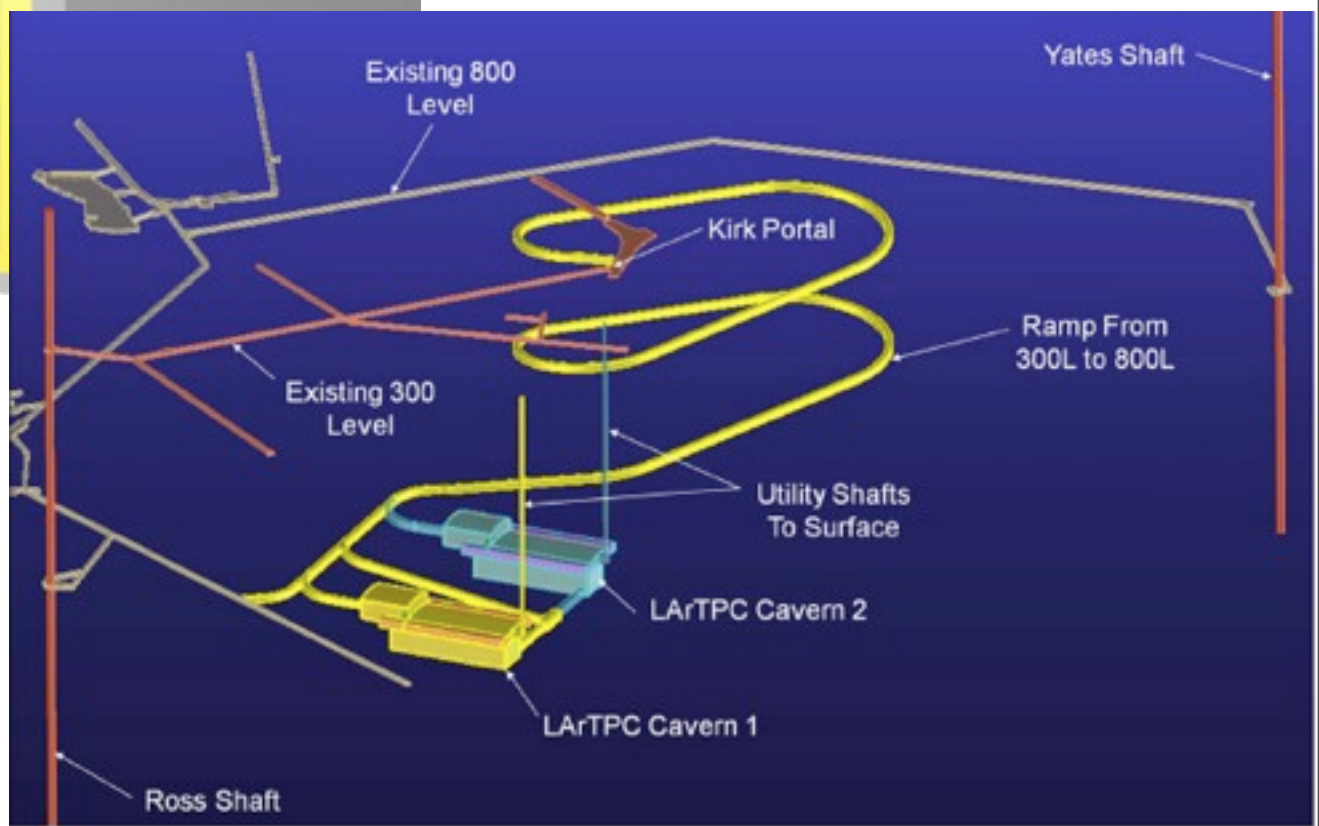

normal

inverted

nu

anti-nu

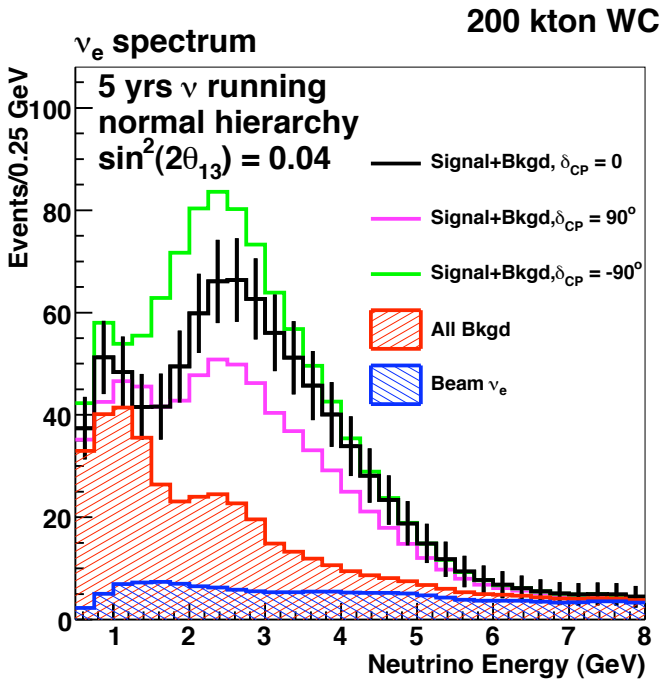

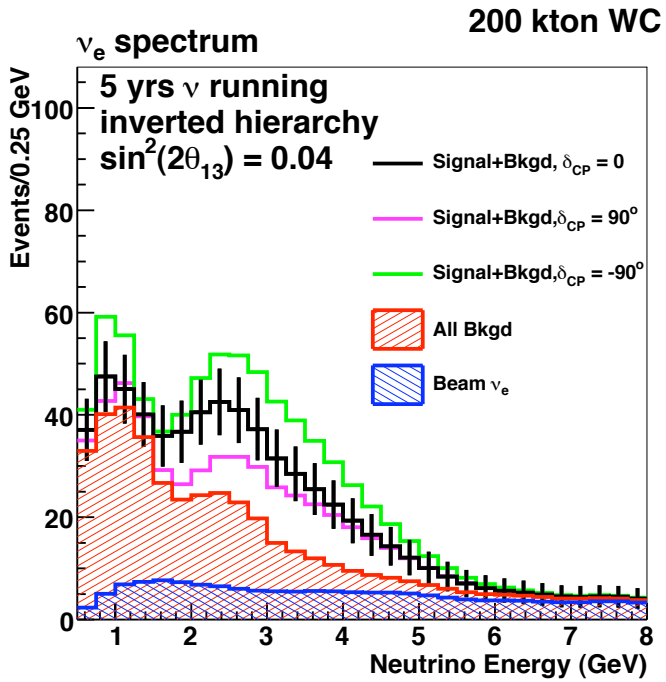

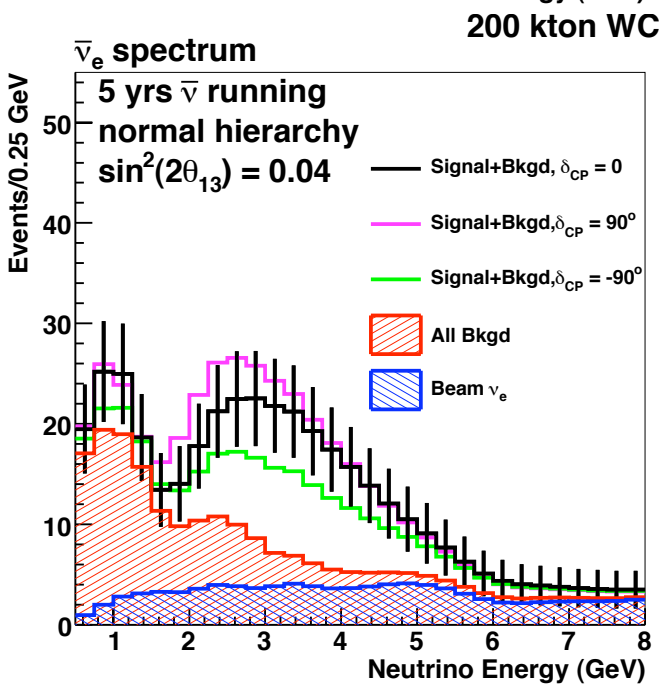

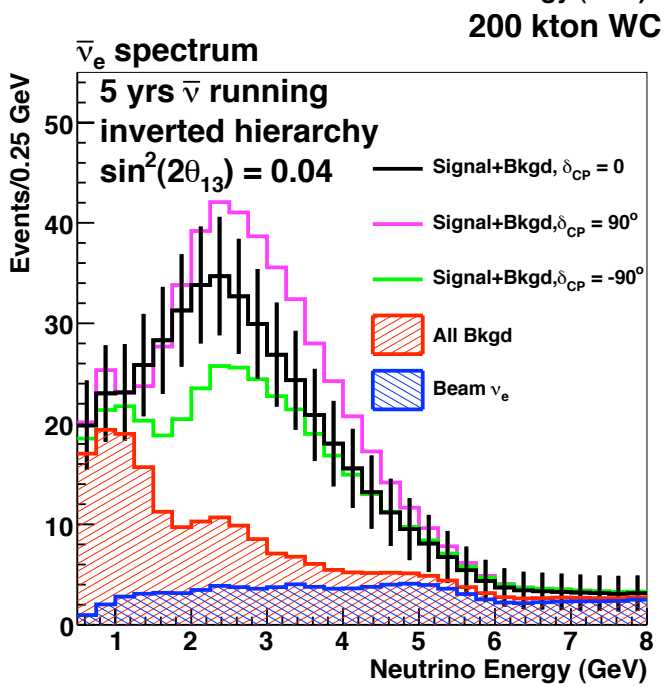

Lisa Whitehead

normal

inverted

nu

anti-nu

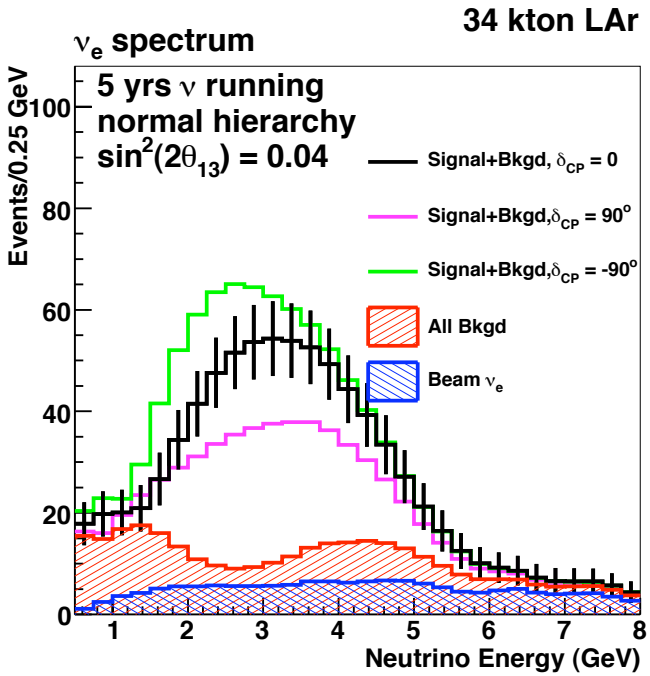

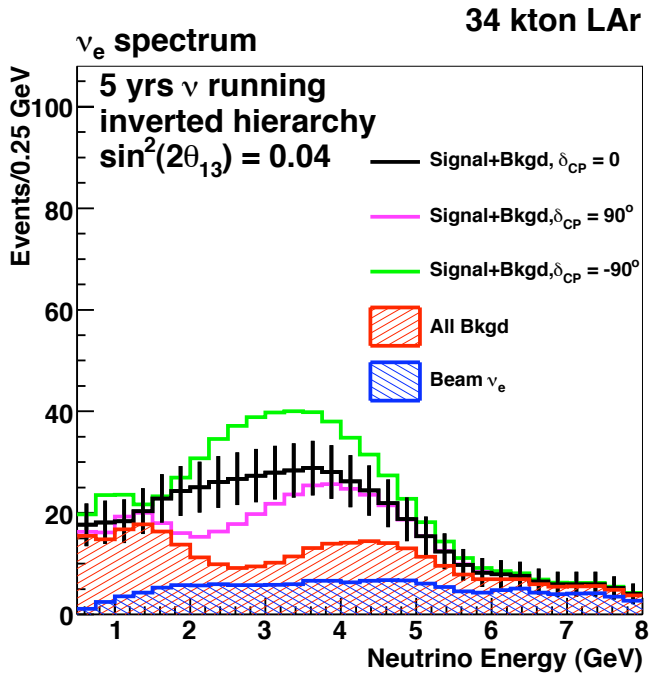

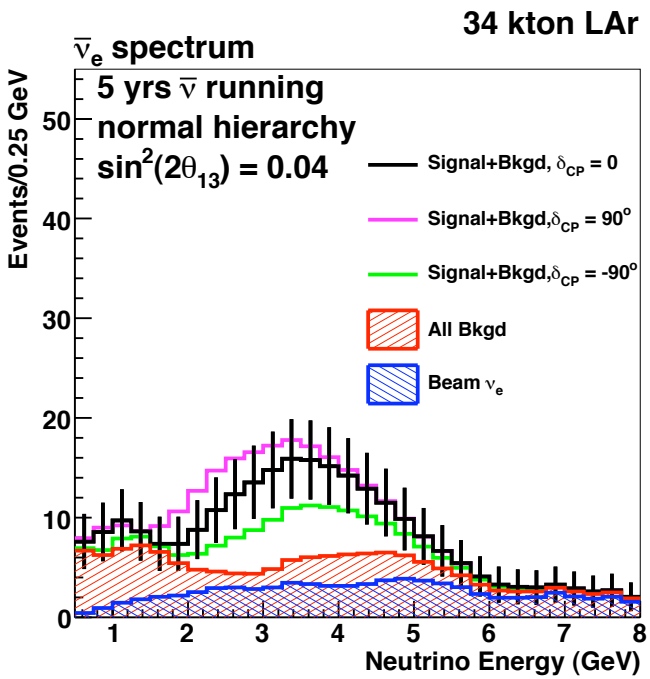

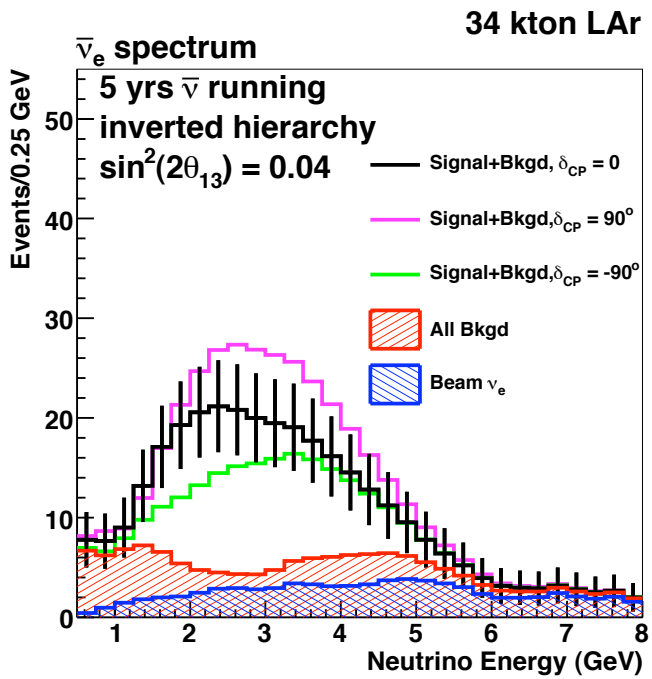

Lisa Whitehead

Sensitivity summary

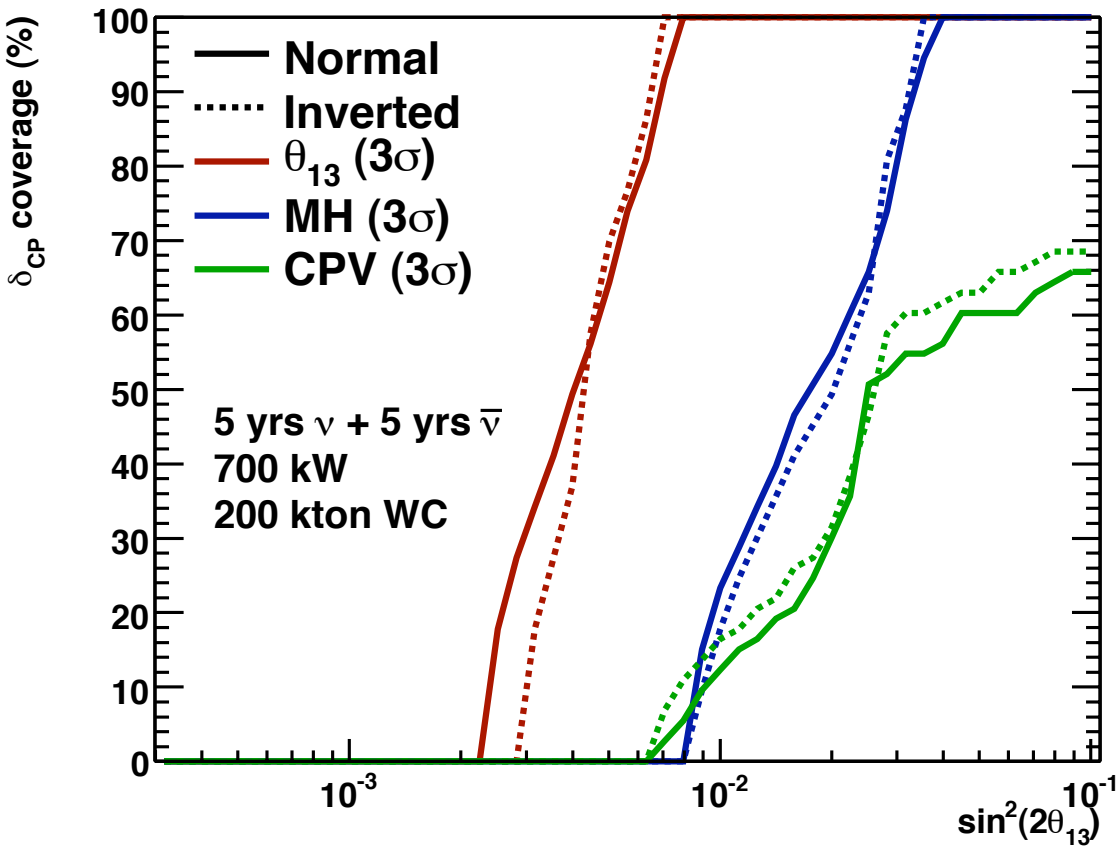

Summary

- Discovery of oscillations and neutrino mass has opened a new field for measurement.
- The current focus is on full understanding of the quantum mechanical mixing phenomena which takes place on a very large scale and huge dynamic ranges.
- A new program of experiments is in discussion and design. It requires detectors that are order of magnitude bigger and beam intensities that are much higher.

4850L LBNE Spaces

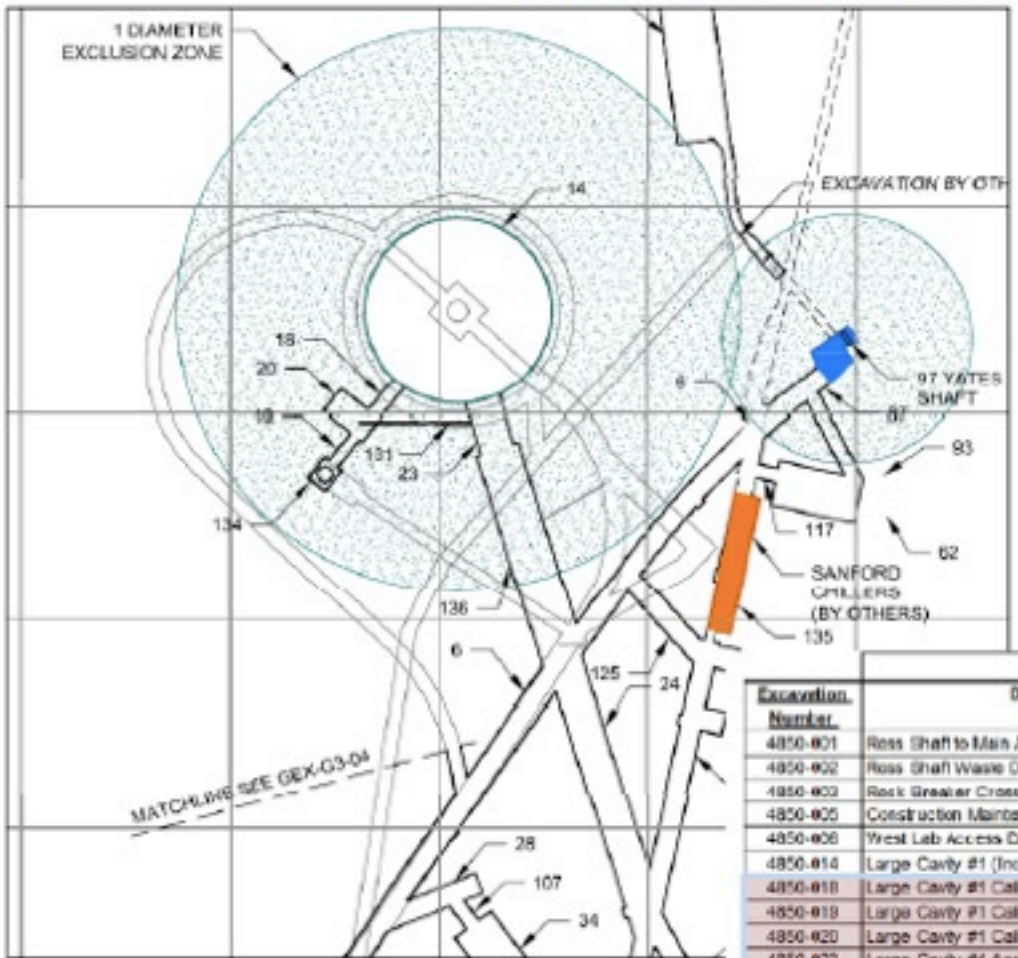

All information from Golder 100% PD draft drawings dated 13-Sep-2010

LBNE-only responsibility

LBNE-shared responsibility

Excavation Number	DUSEL MREFC Scope Excavation Name	90% PDR - Finished Inside Dimensions, Metric: Width (m)	Height (m)	Length (m)	Springline (m)
4850-801	Ross Shaft to Main Access Drift	6.00	6.00	201.02	4.50
4850-802	Ross Shaft Waste Dump Drift	8.00	7.00	10.97	5.00
4850-803	Rock Breaker Cross Cuts	8.00	7.00	15.83	5.00
4850-805	Construction Maintenance/Assembly Shop	13.01	8.25	20.03	5.00
4850-806	West Lab Access Drift	6.00	6.00	744.56	4.50
4850-814	Large Cavity #1 (Including Dome)	55.01	83.00	0.00	64.00
4850-818	Large Cavity #1 Calibration Drift	4.00	4.00	20.15	3.00
4850-819	Large Cavity #1 Calibration Drift Access	3.00	3.00	9.88	2.25
4850-820	Large Cavity #1 Calibration Room (Including Access Portal)	8.00	5.00	10.05	3.00
4850-823	Large Cavity #1 Access and Utility Drift	10.01	8.00	14.72	5.50
4850-824	Large Cavity #1 Access Drift, Water Purification System	10.01	8.00	71.99	5.50
4850-835	4850 - 3950 Vent Raise Access Drift	6.00	6.00	15.15	4.50
4850-836	4850 - 3950 Vent Raise (round)	4.27		267.24	
4850-131	LC1 Utility borehole	0.30		32.75	
4850-135	Yates Shaft Emergency Response Equipment Storage	9.00	0.00	9.00	0.00
4850-136	Large Cavity #1 Access and Utility Drift - Enlarged section	13.01	8.75	60.91	5.50

LC-1 Excavation & Support

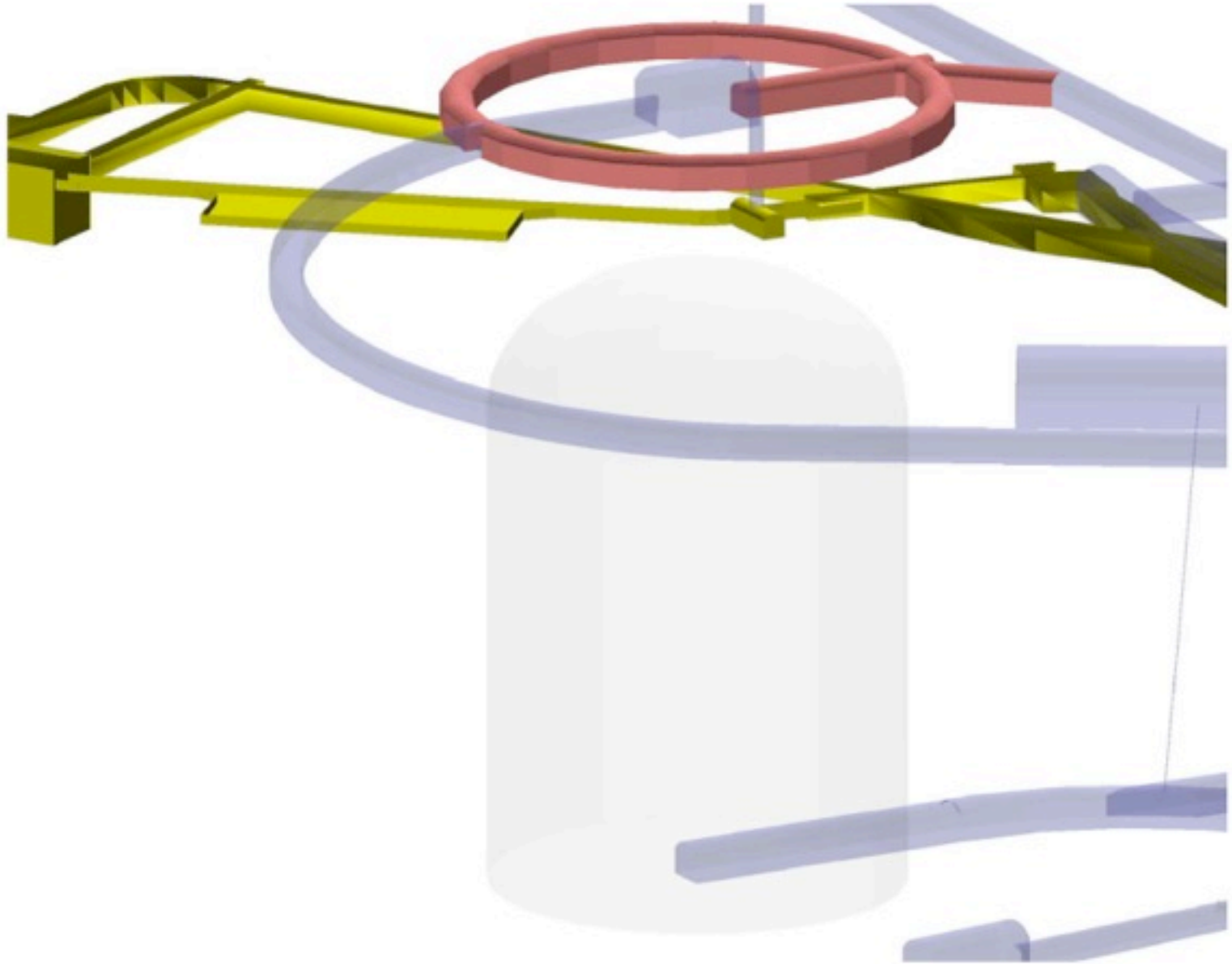

LC-1 Excavation & Support

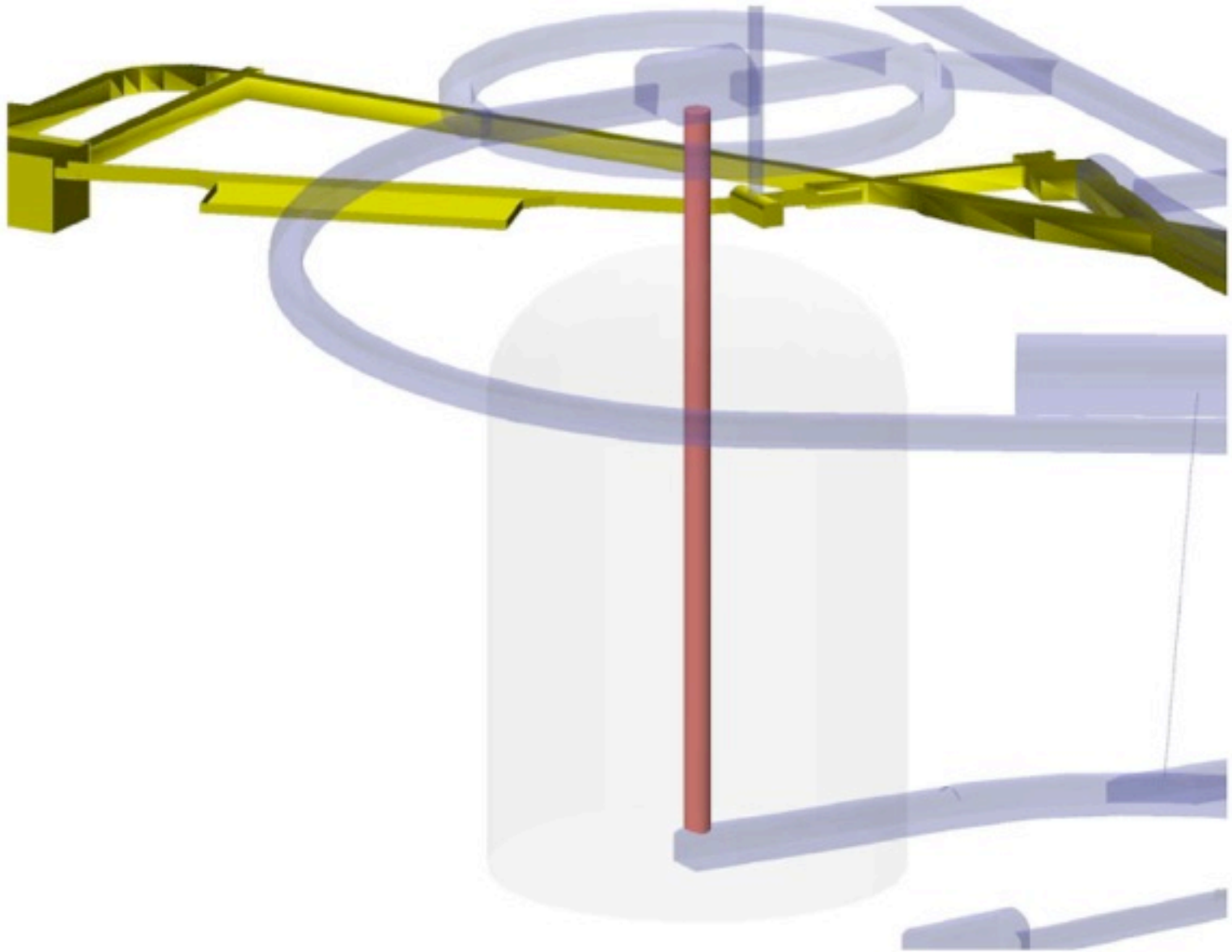

LC-1 Excavation & Support

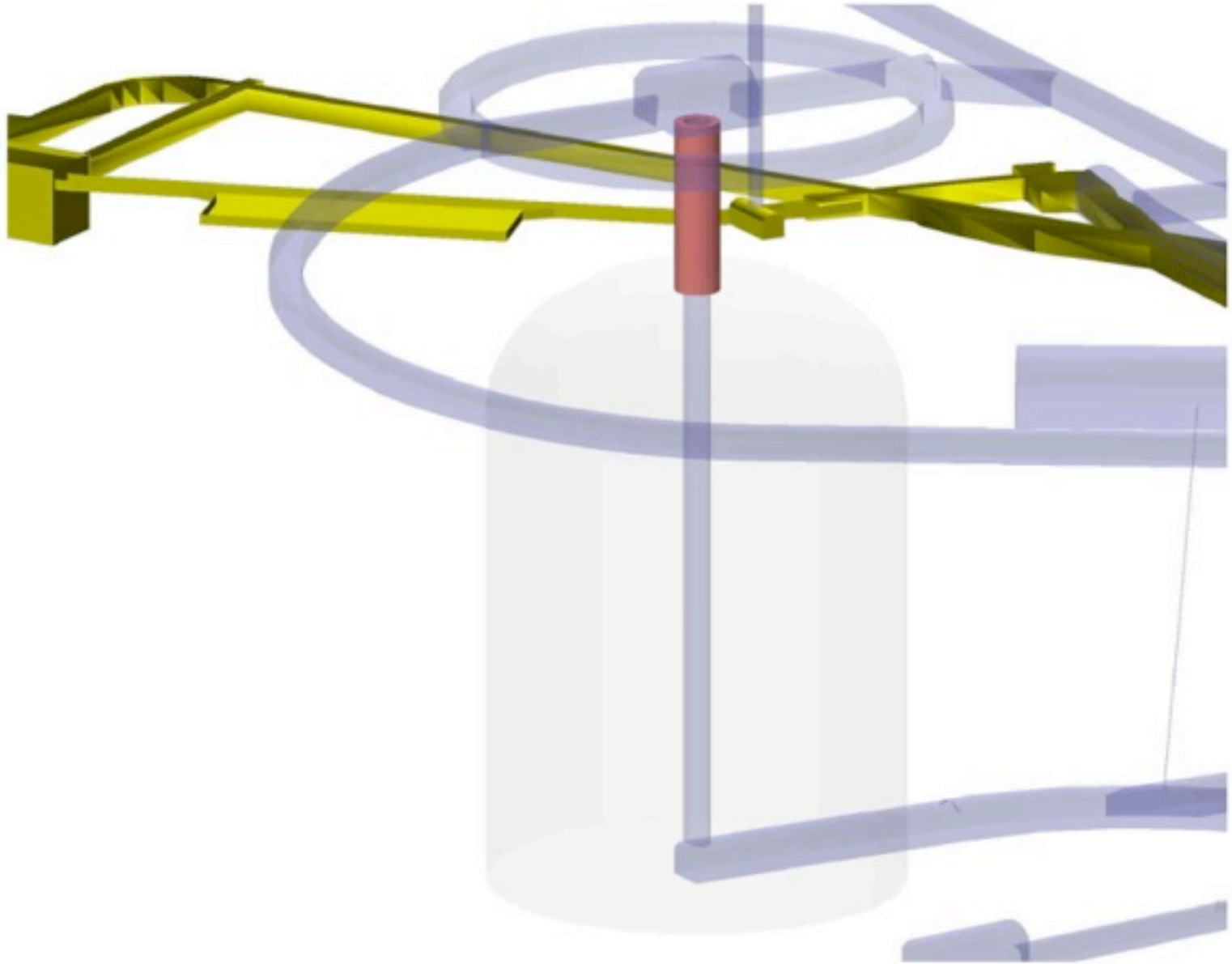

LC-1 Excavation & Support

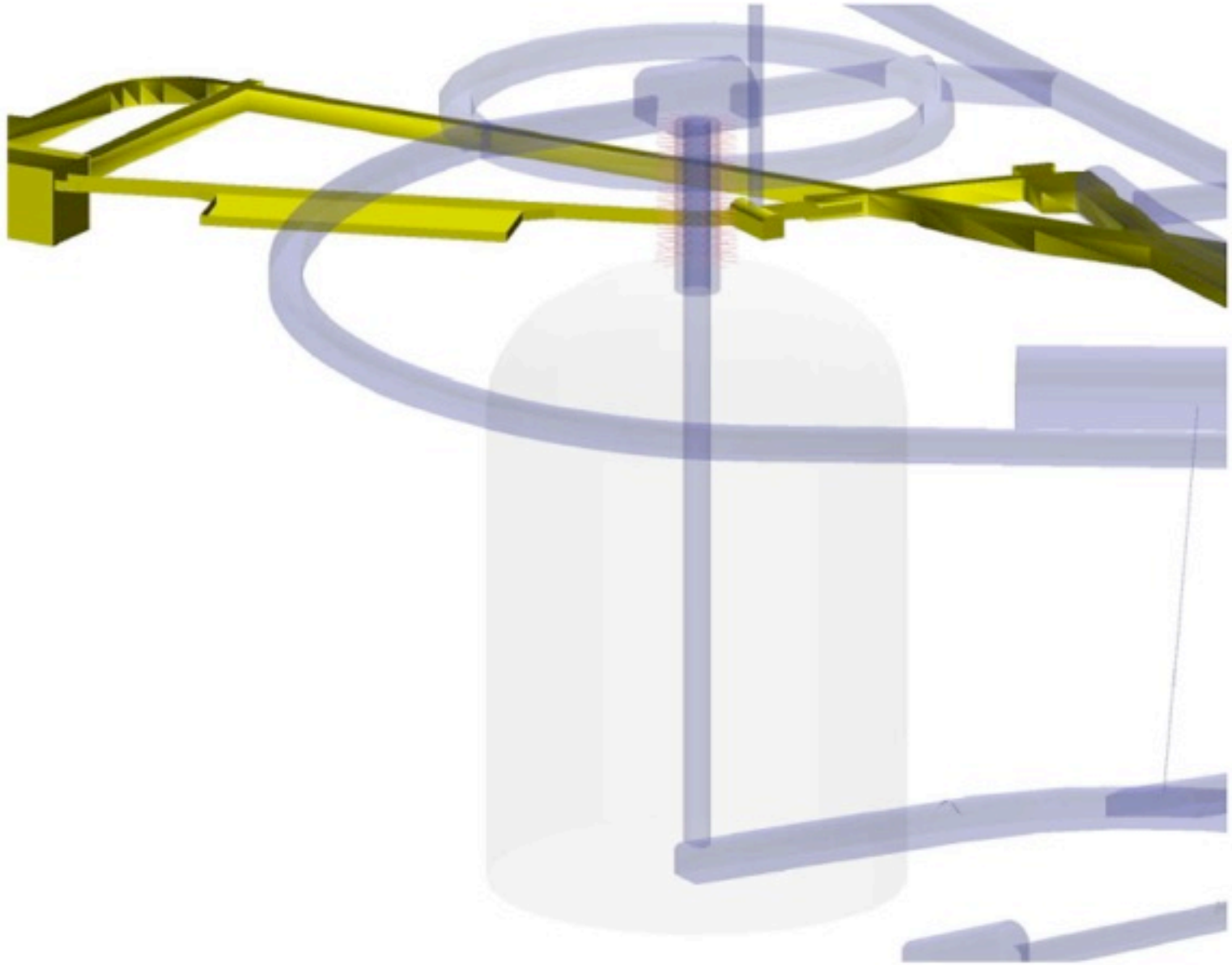

LC-1 Excavation & Support

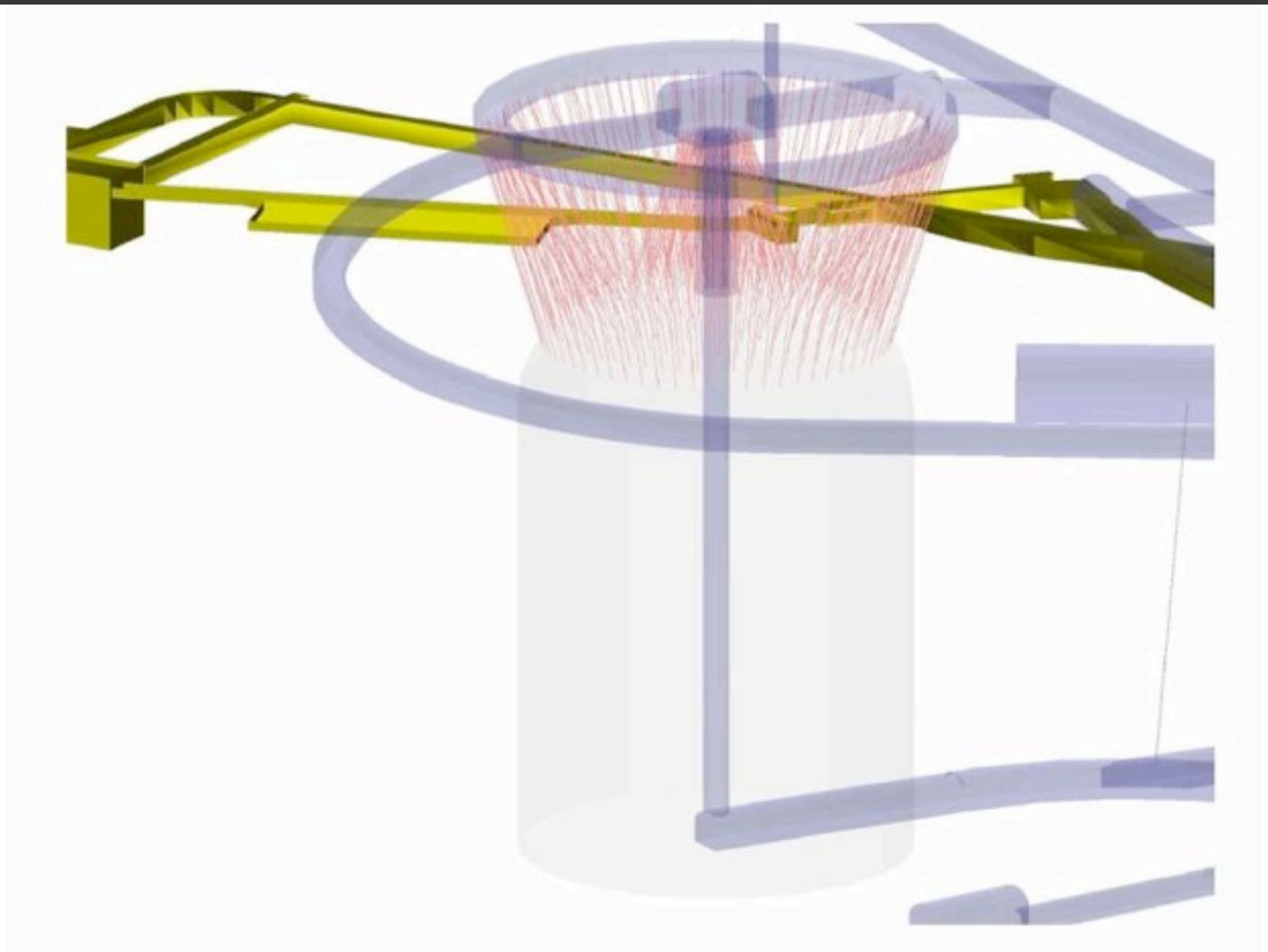

LC-1 Excavation & Support

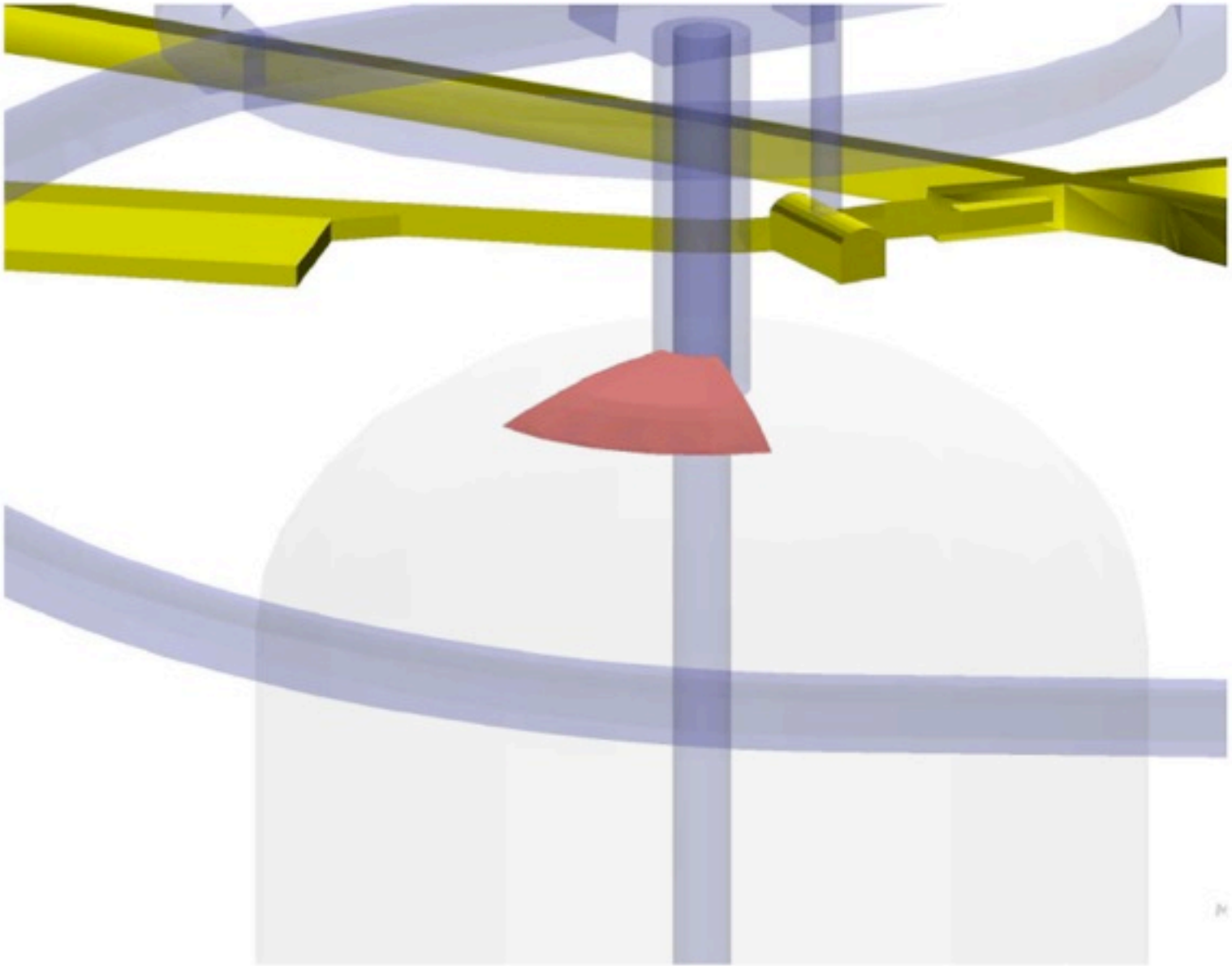

LC-1 Excavation & Support

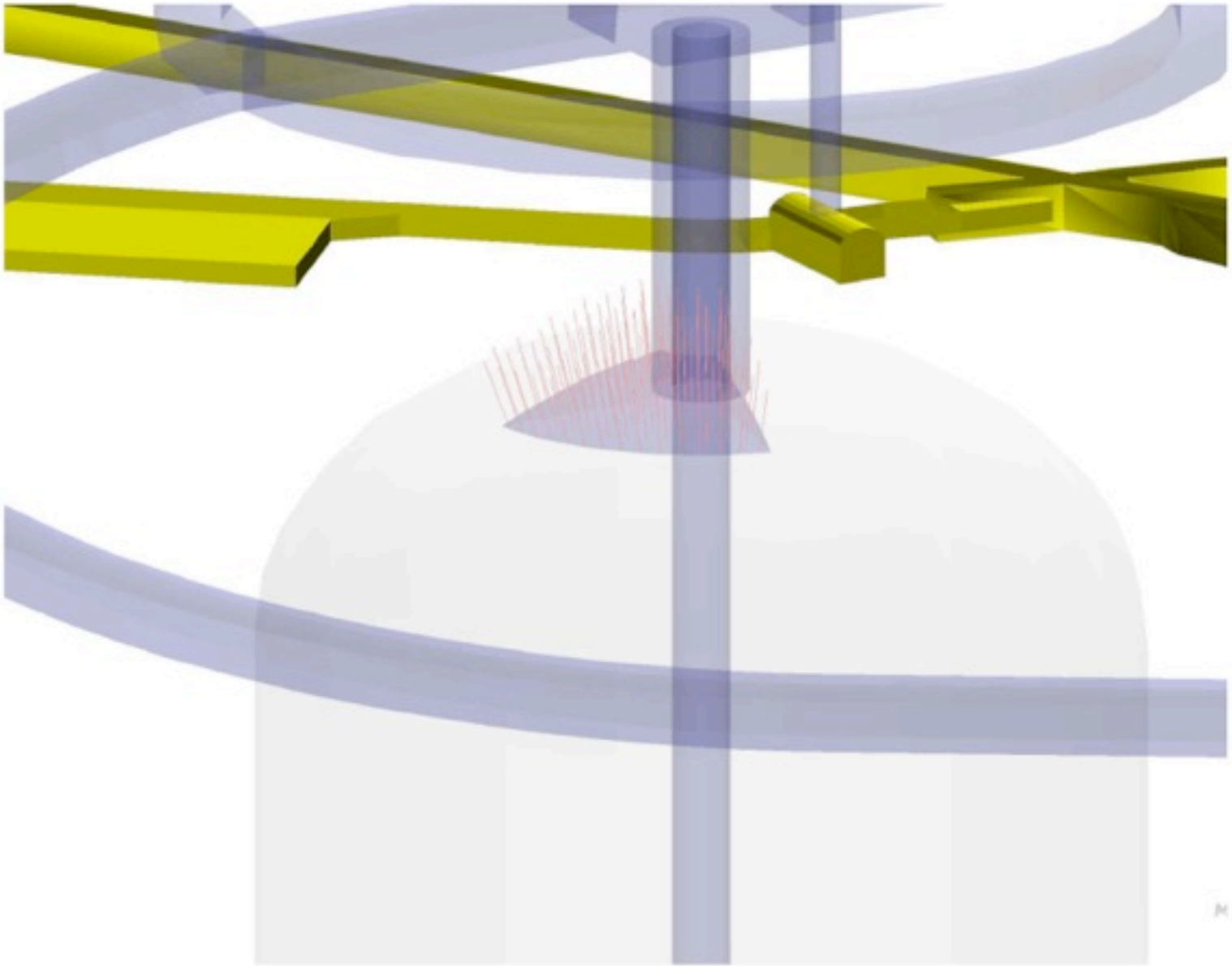

LC-1 Excavation & Support

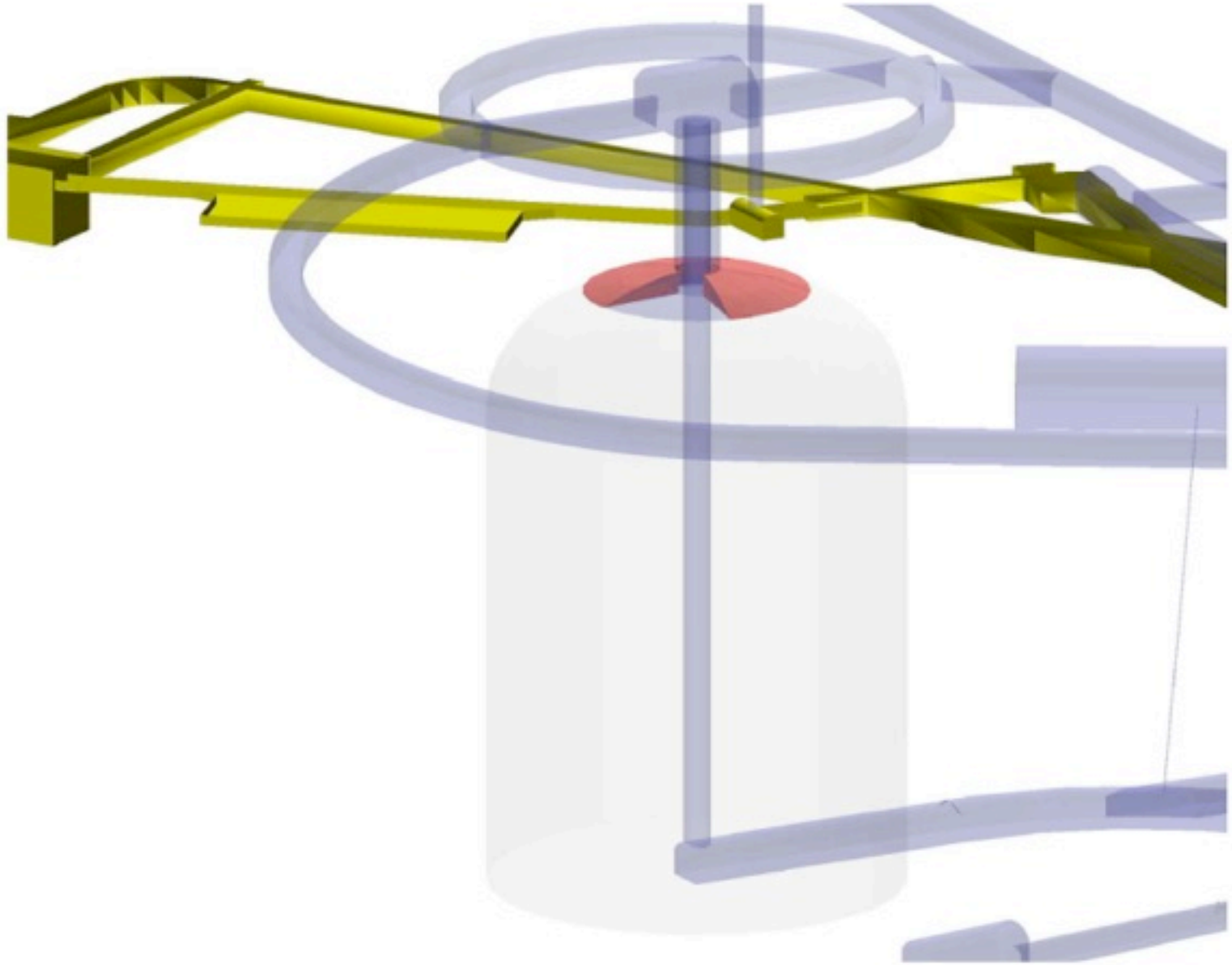

LC-1 Excavation & Support

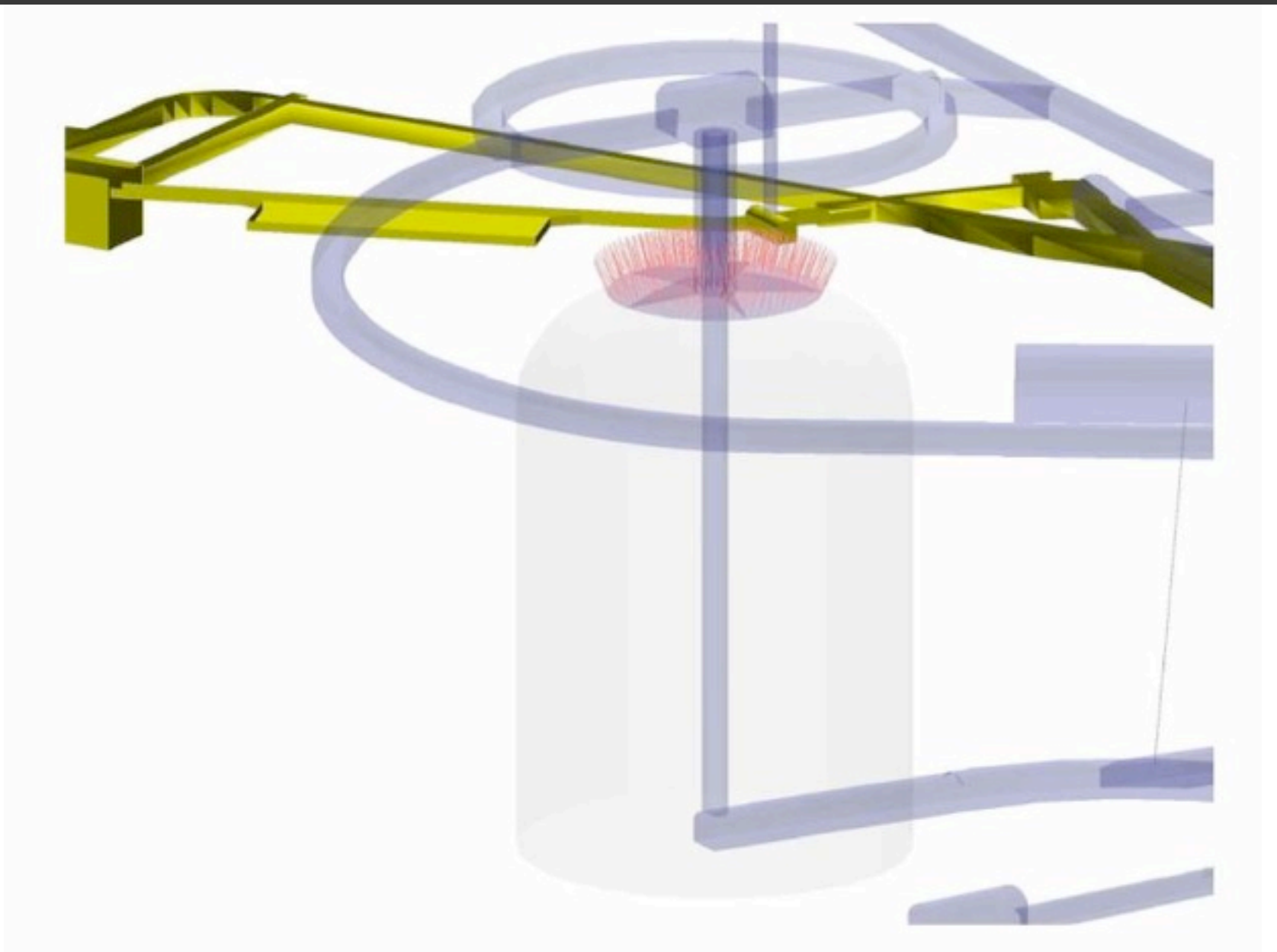

LC-1 Excavation & Support

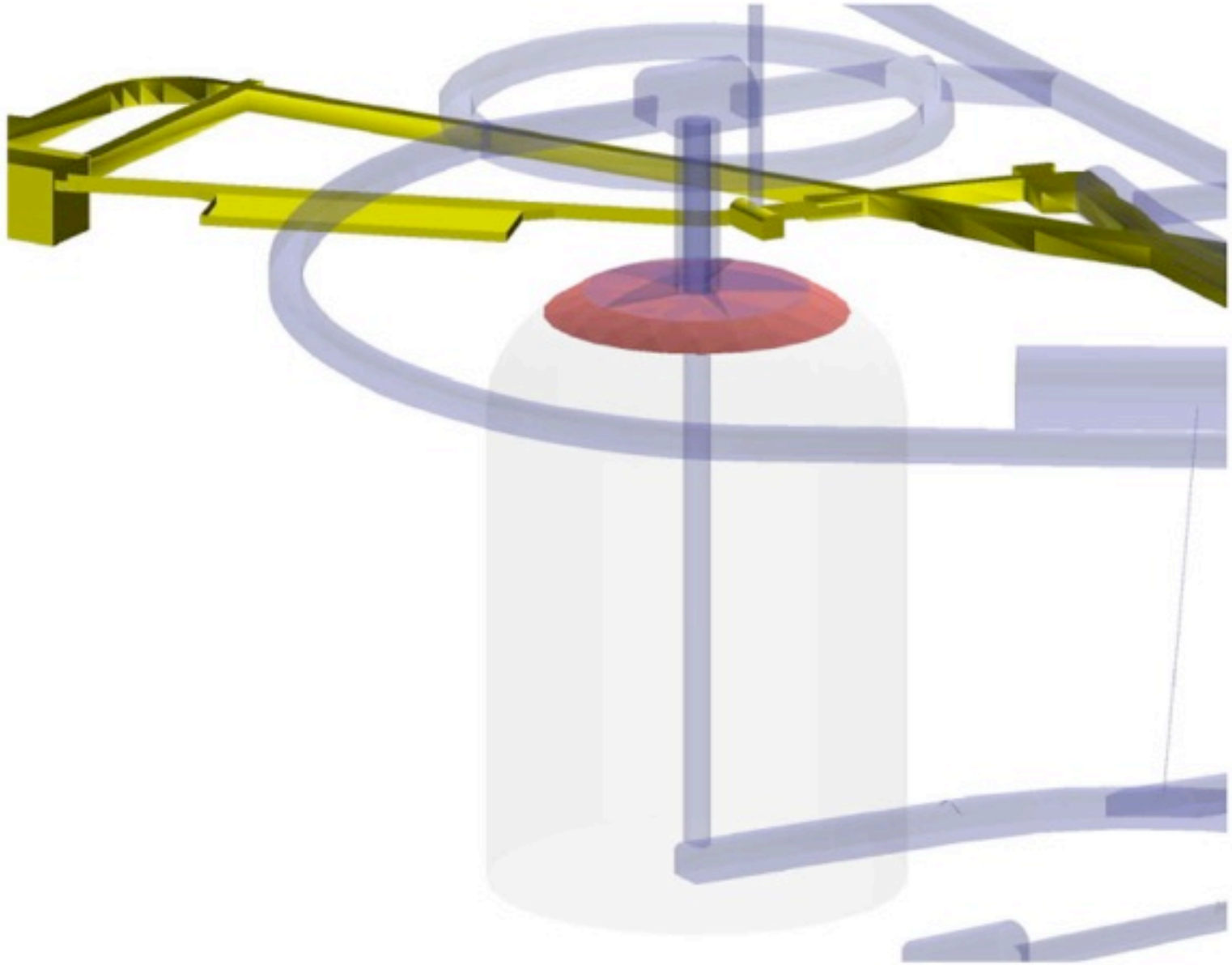

LC-1 Excavation & Support

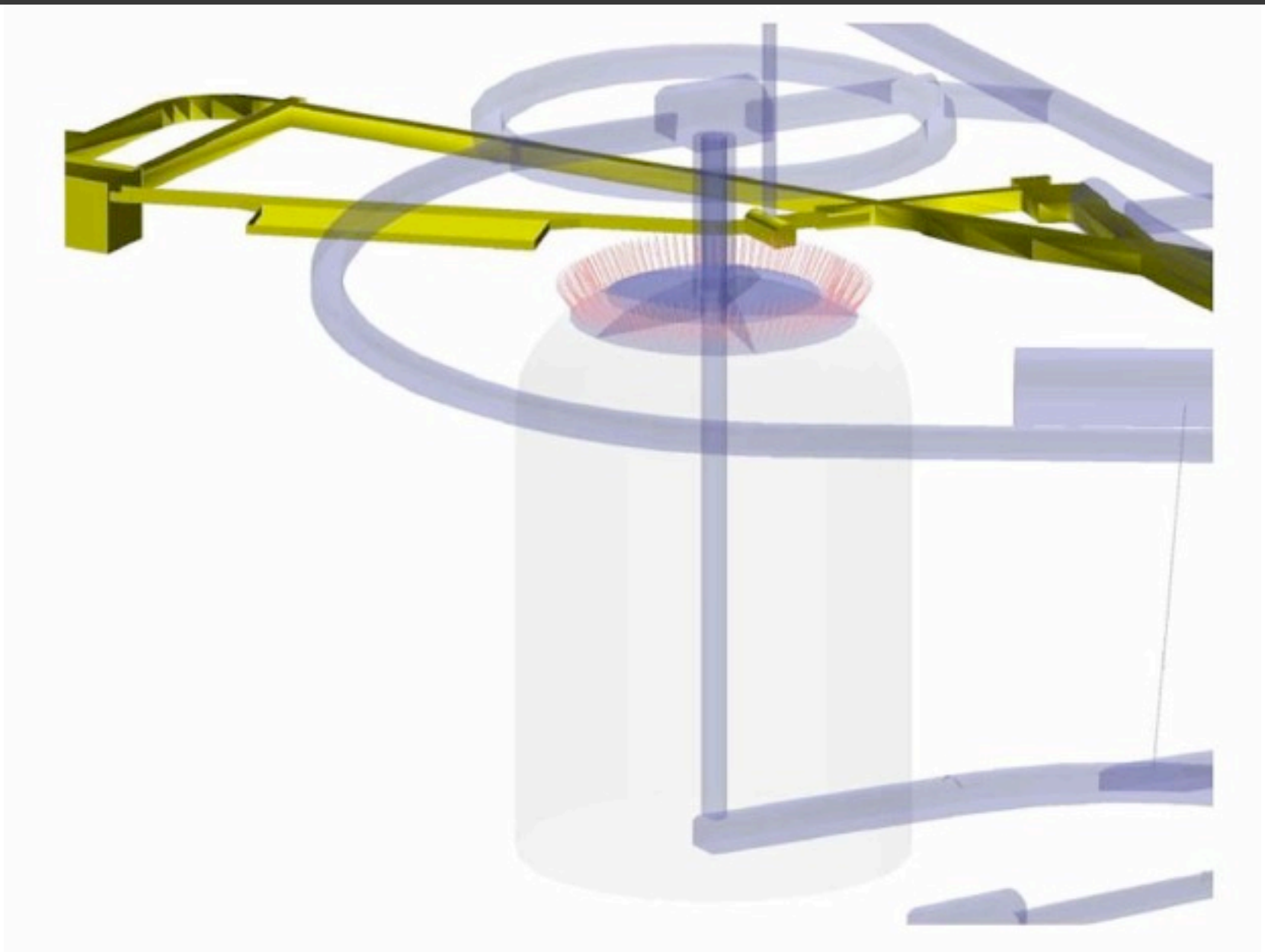

LC-1 Excavation & Support

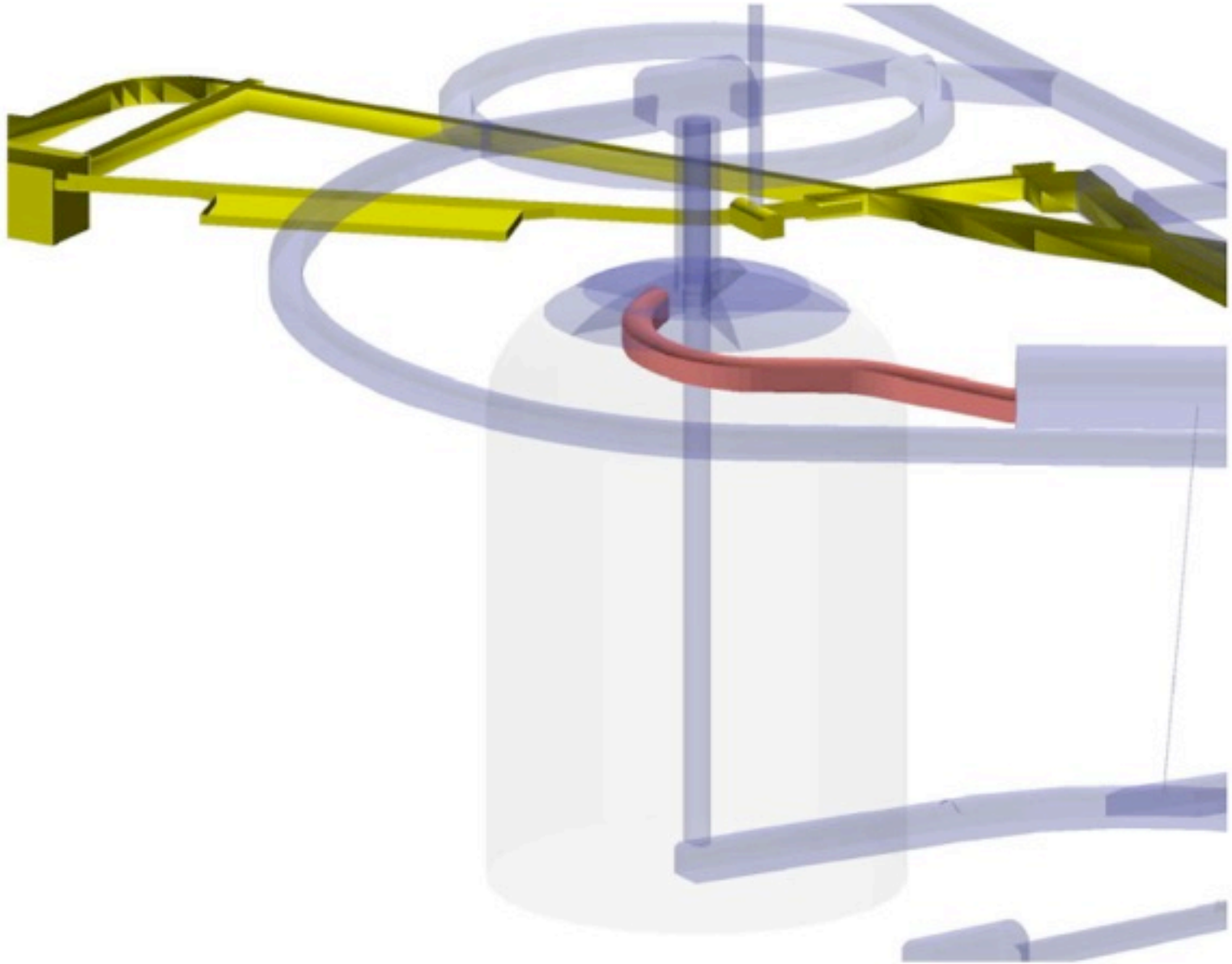

LC-1 Excavation & Support

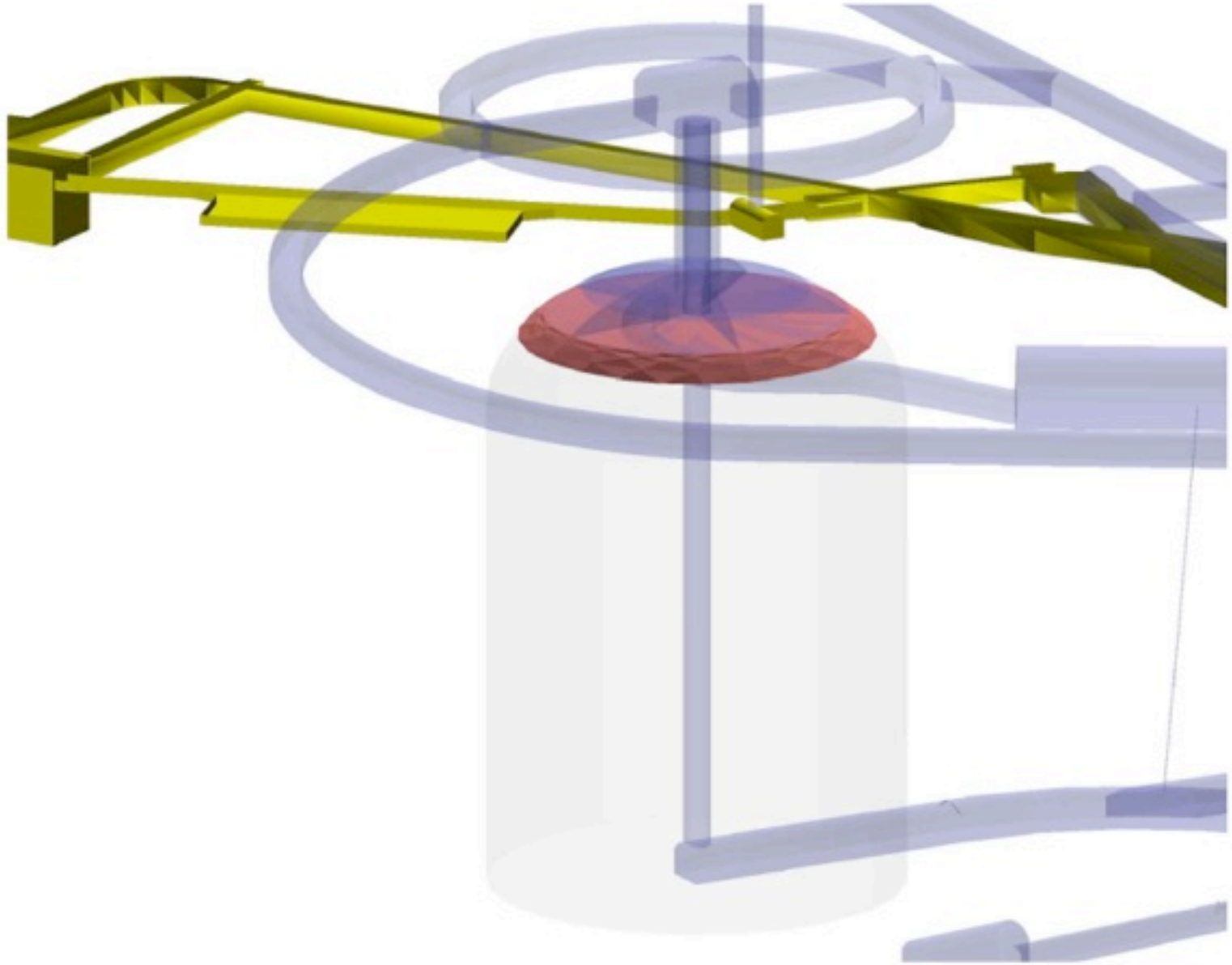

LC-1 Excavation & Support

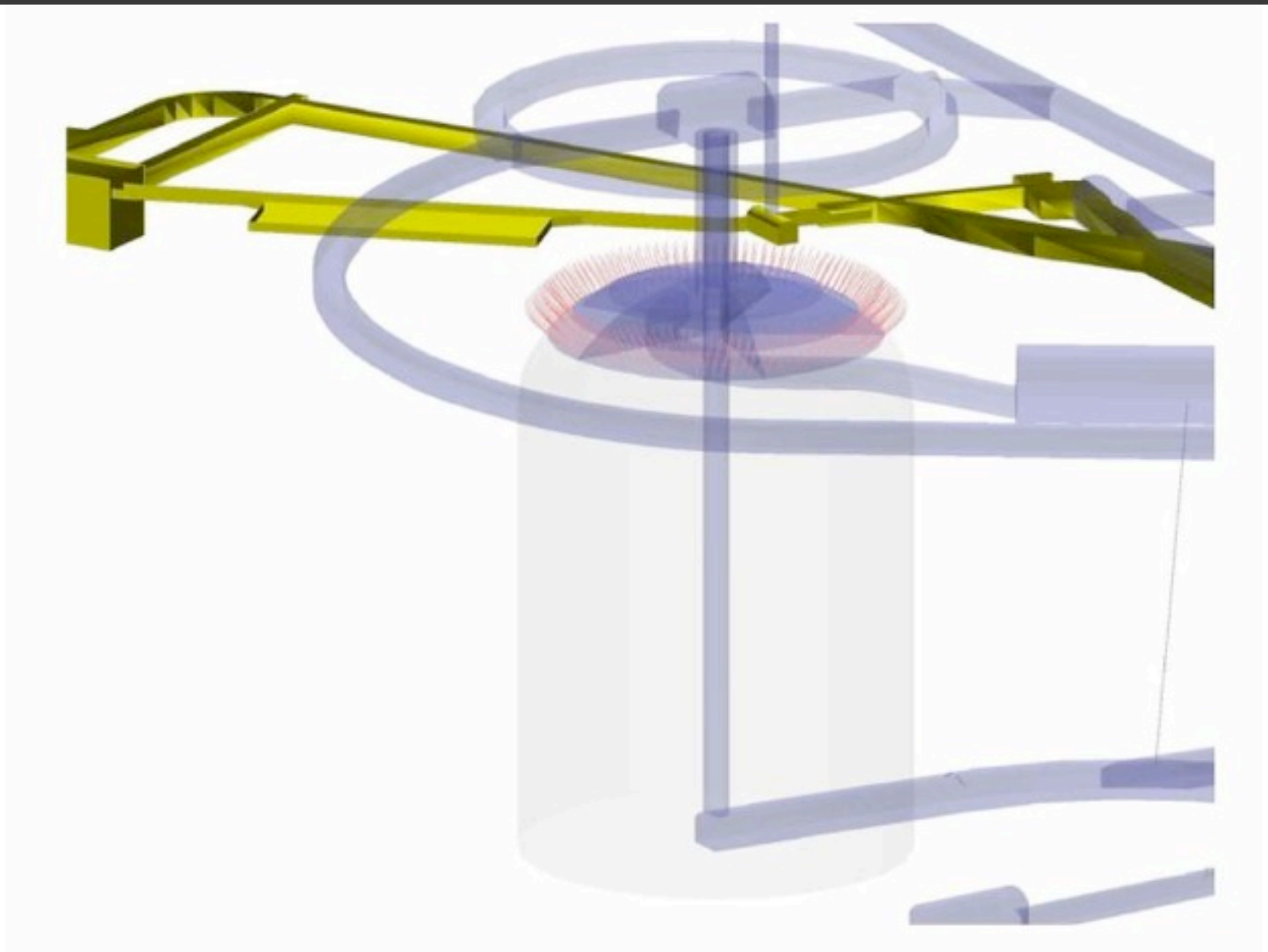

LC-1 Excavation & Support

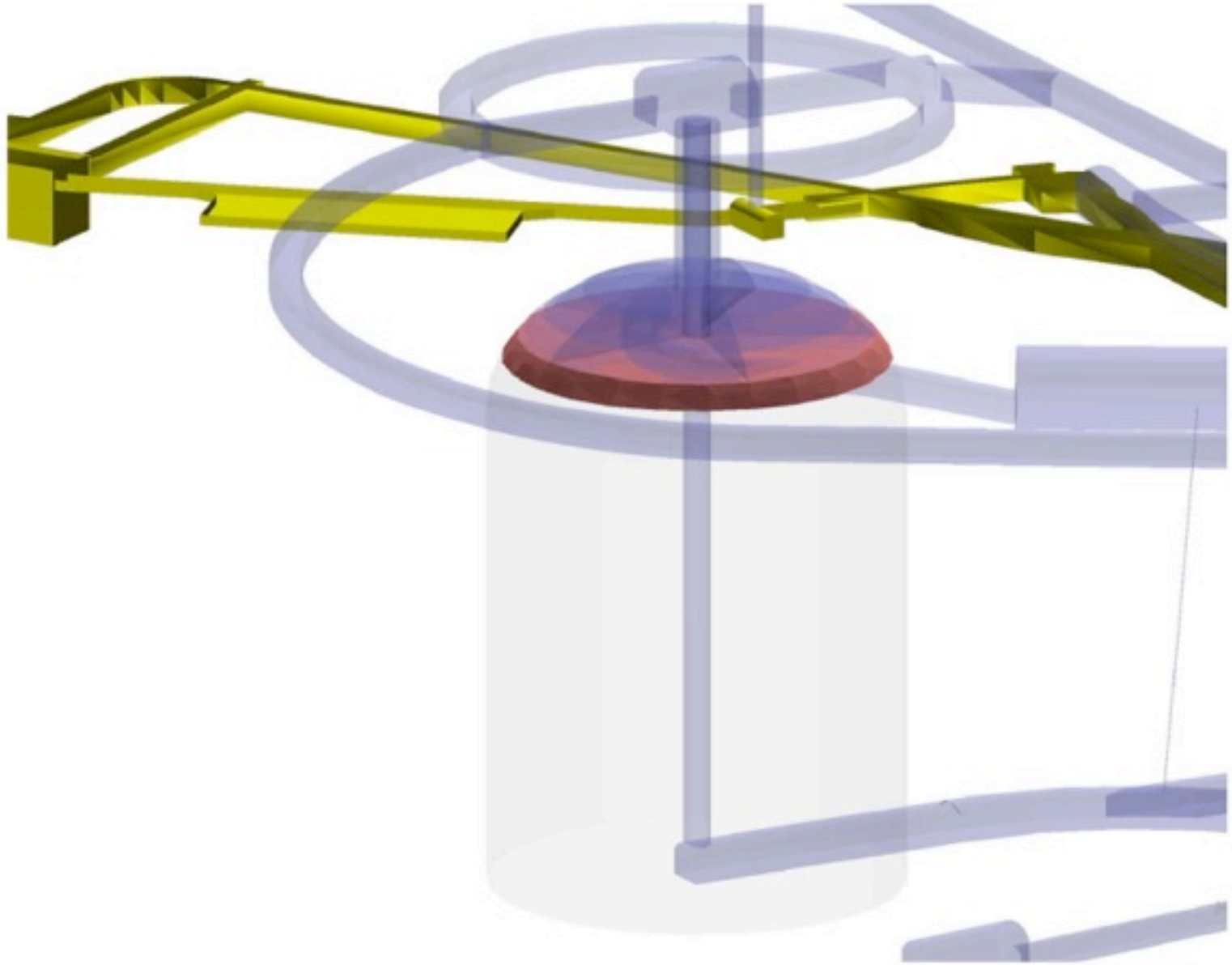

LC-1 Excavation & Support

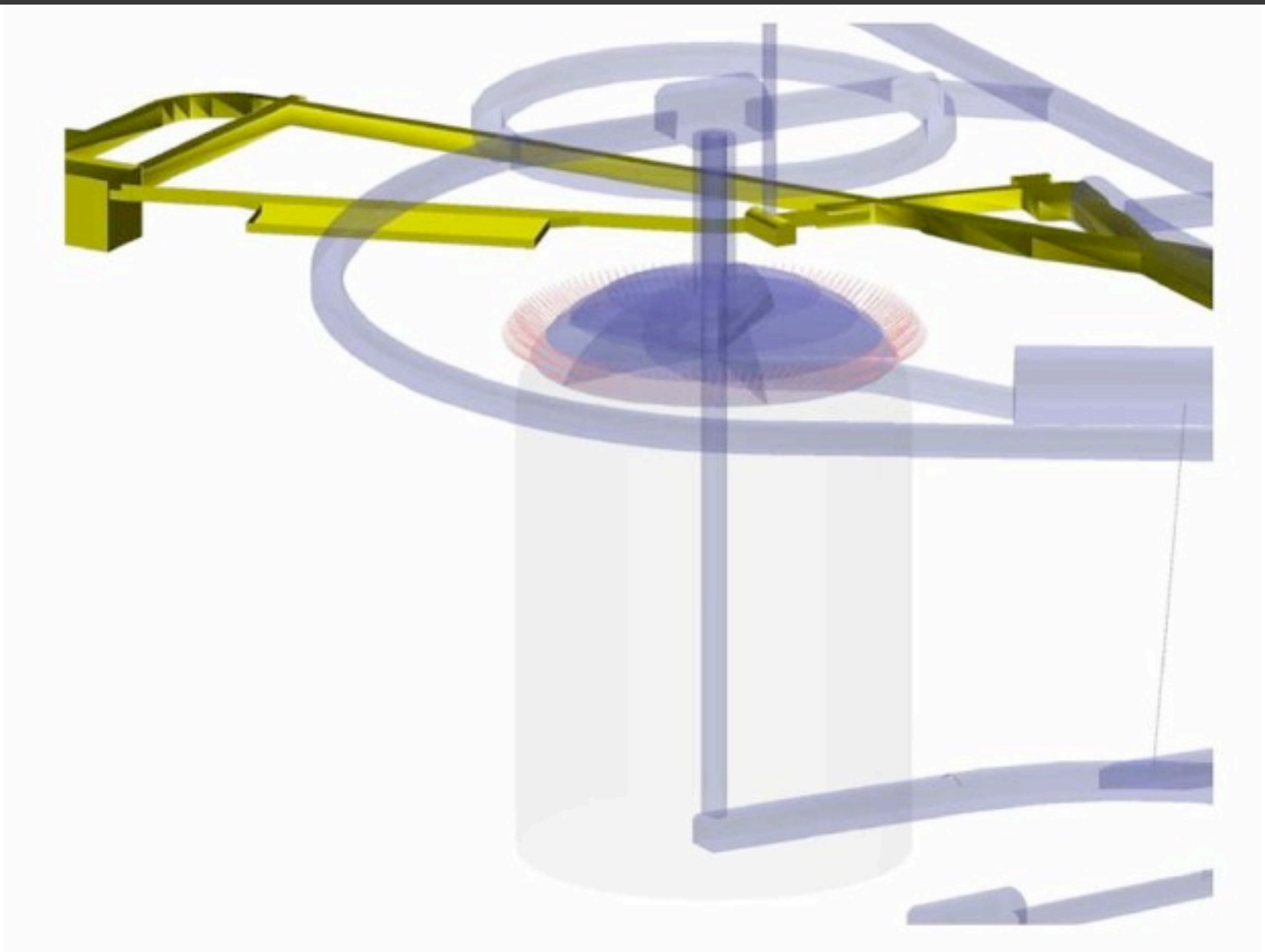

LC-1 Excavation & Support

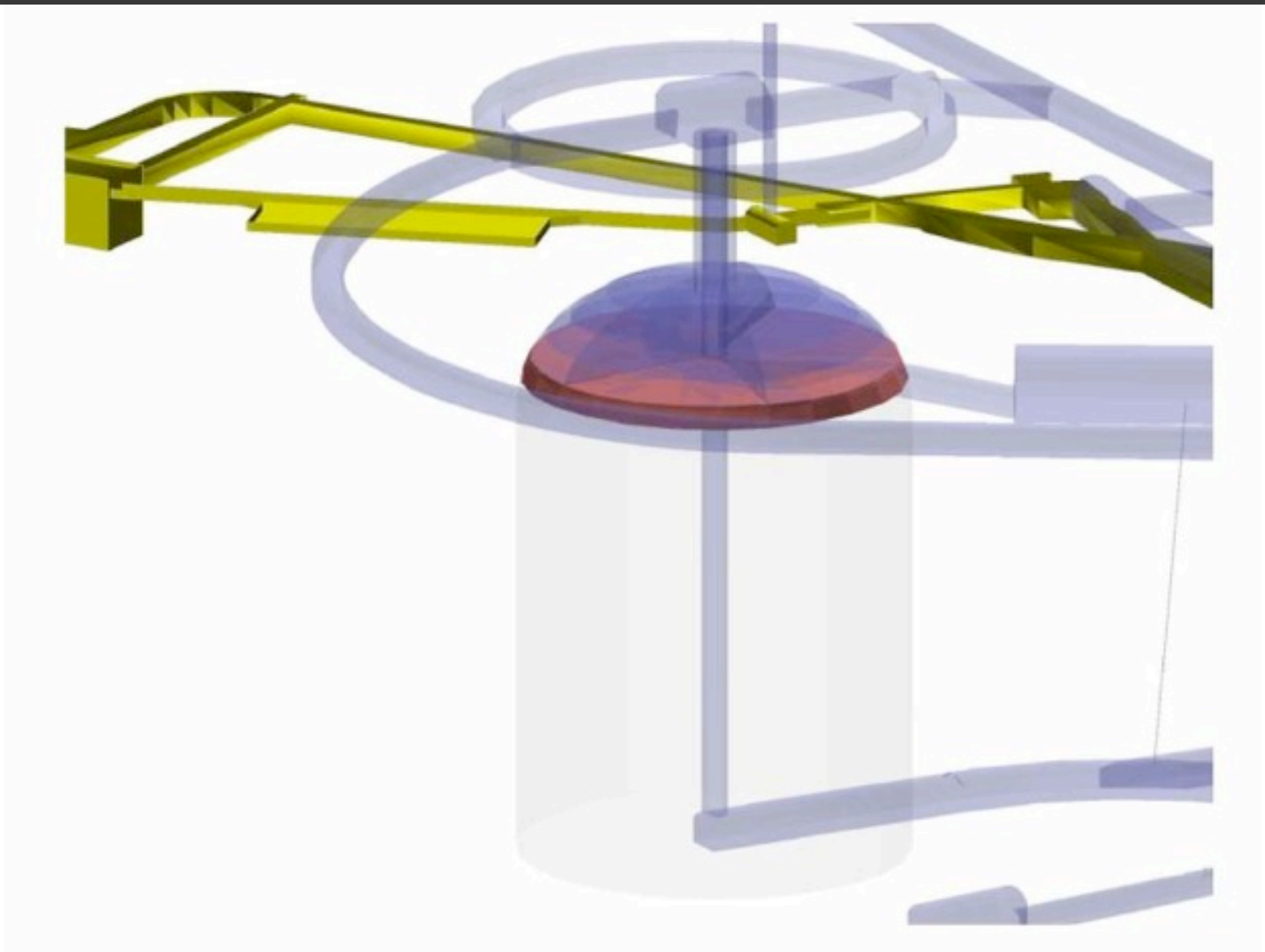

LC-1 Excavation & Support

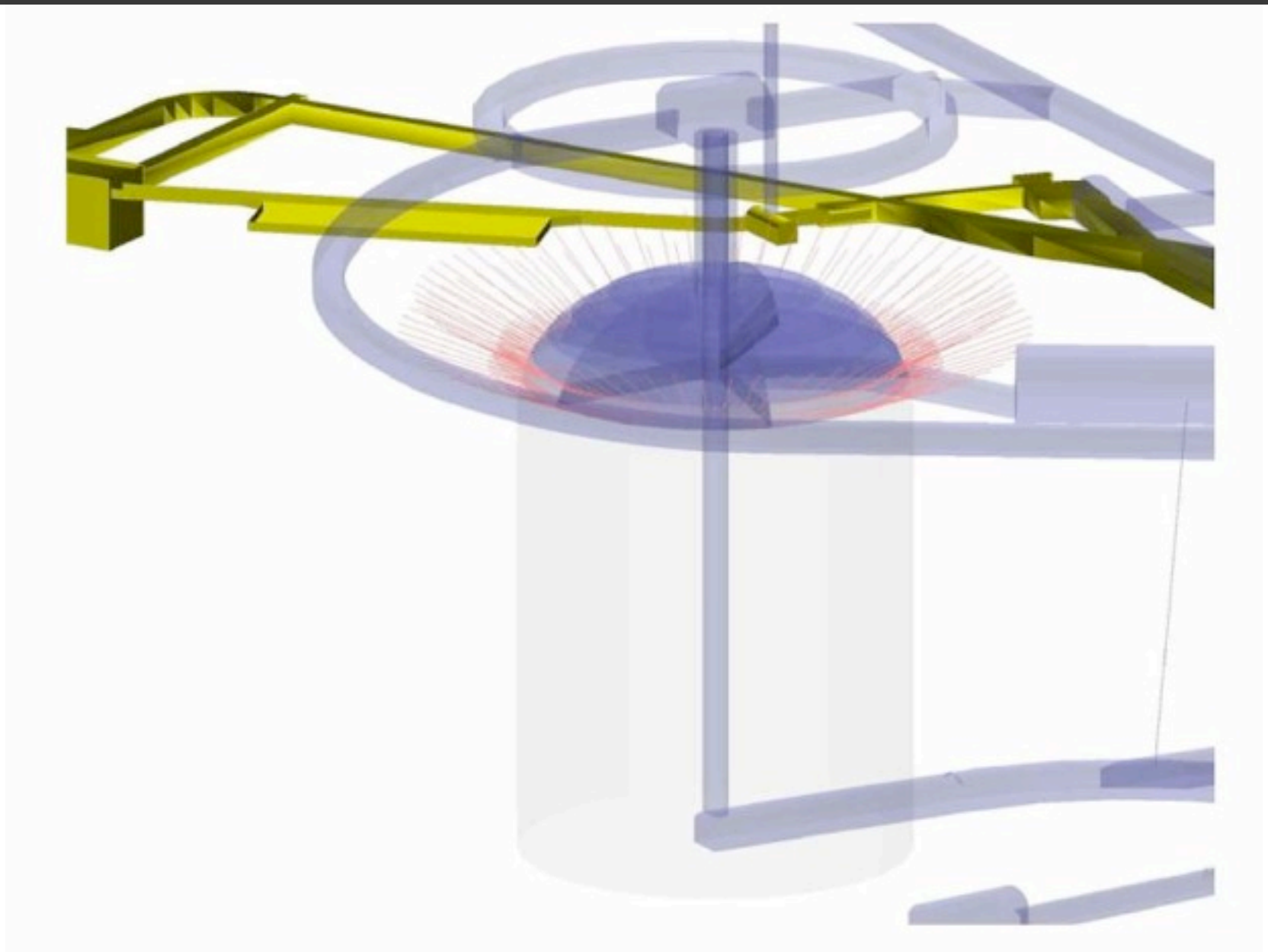

LC-1 Excavation & Support

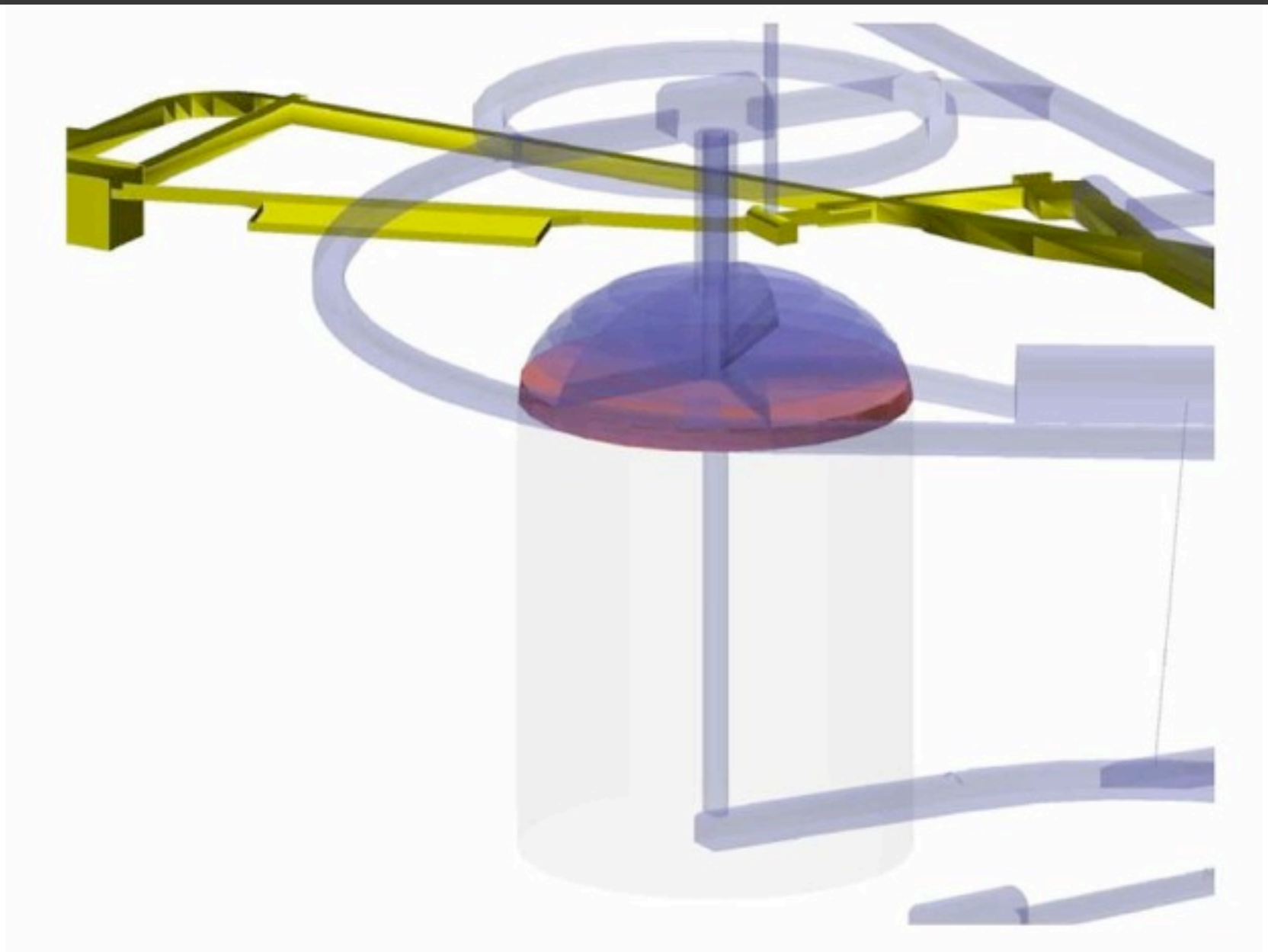

LC-1 Excavation & Support

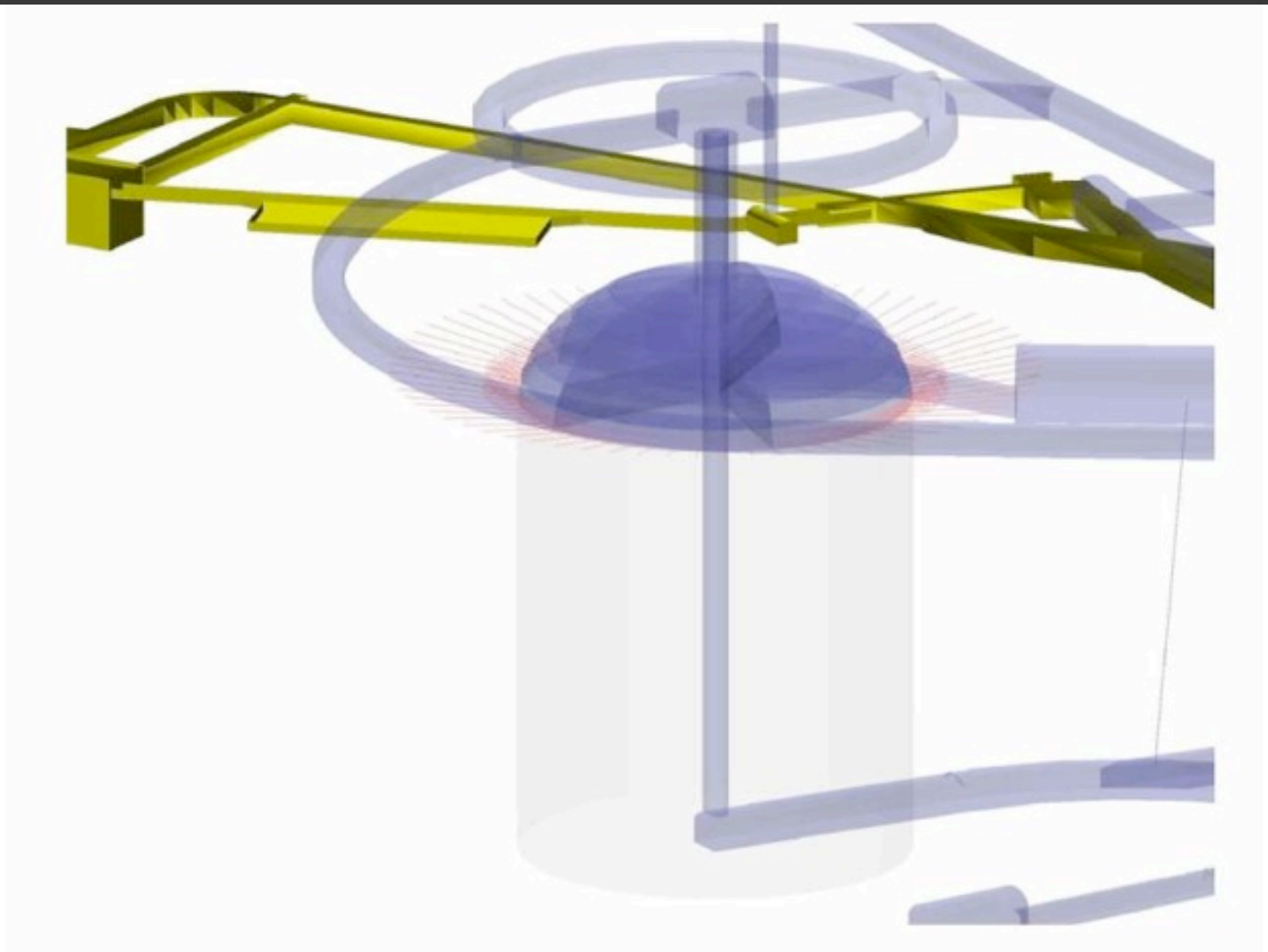

LC-1 Excavation & Support

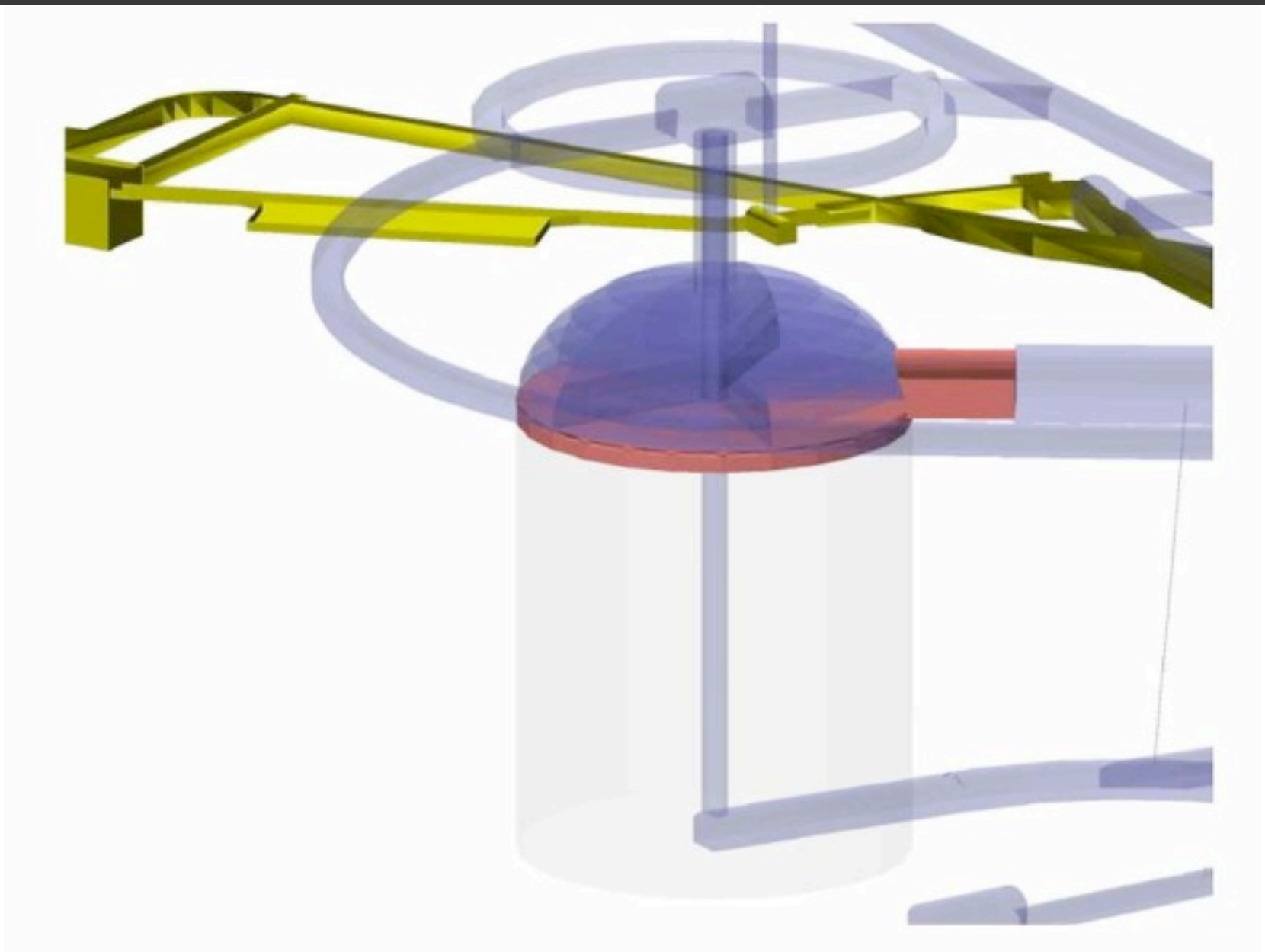

LC-1 Excavation & Support

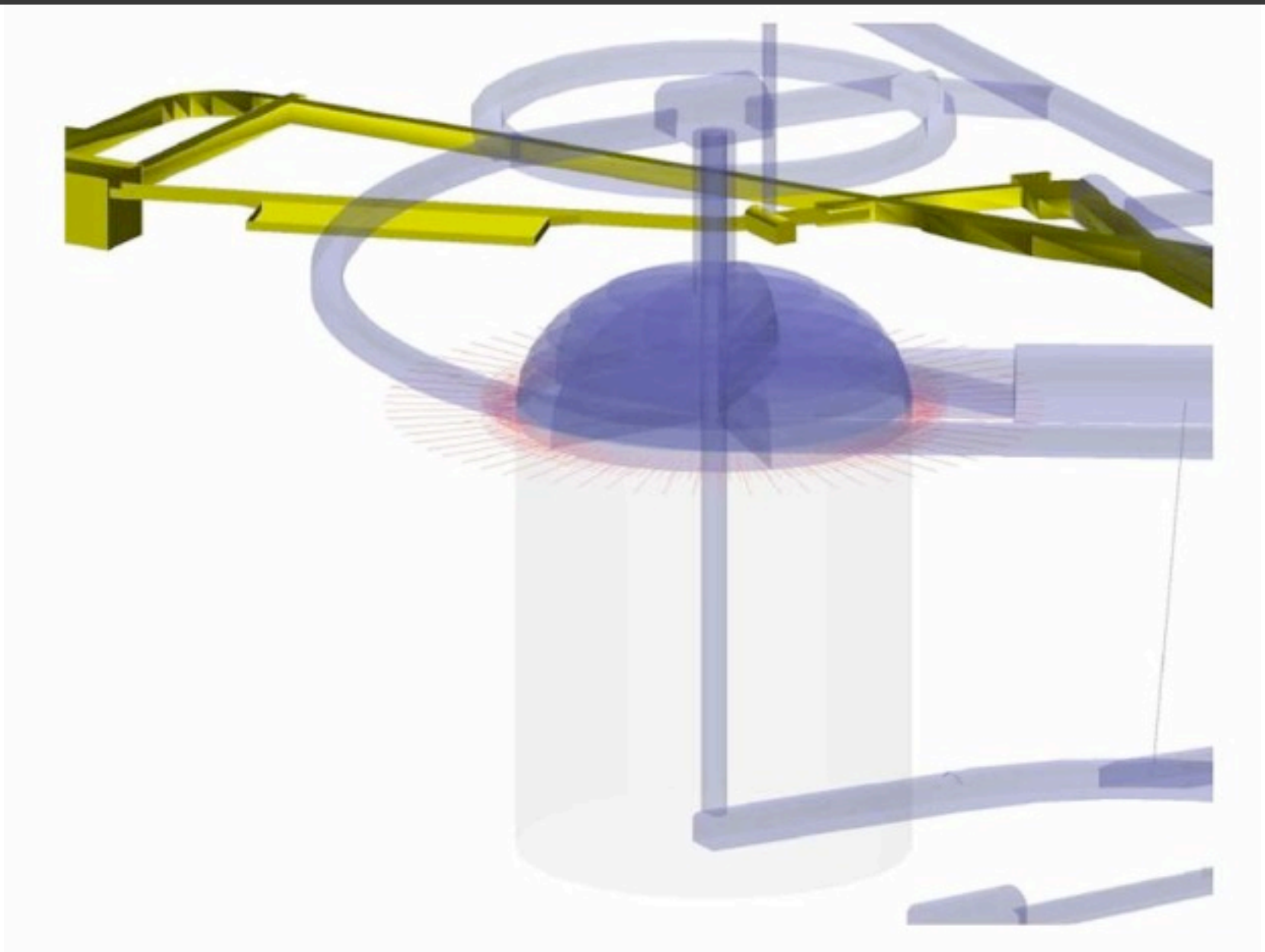

LC-1 Excavation & Support

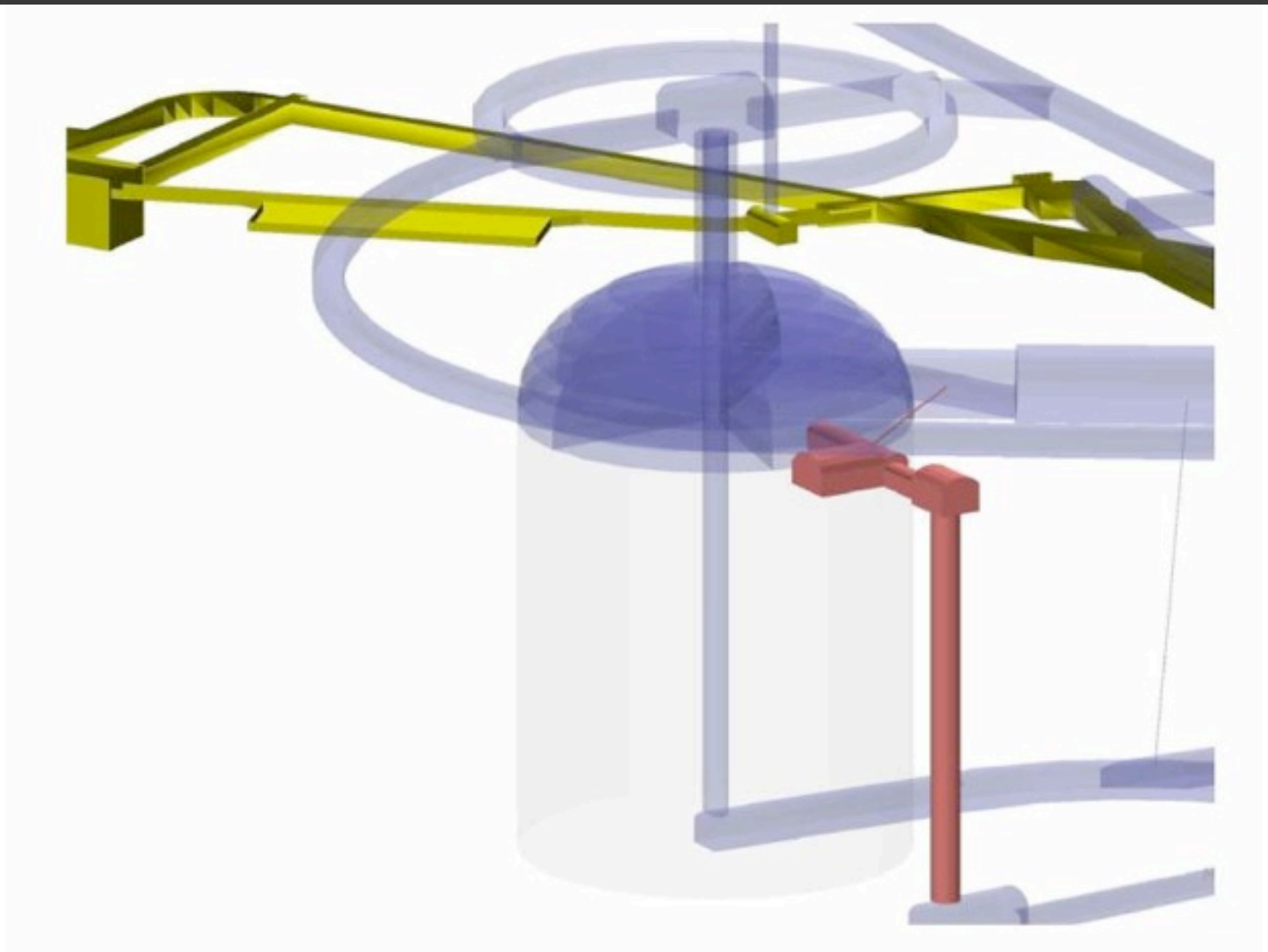

LC-1 Excavation & Support

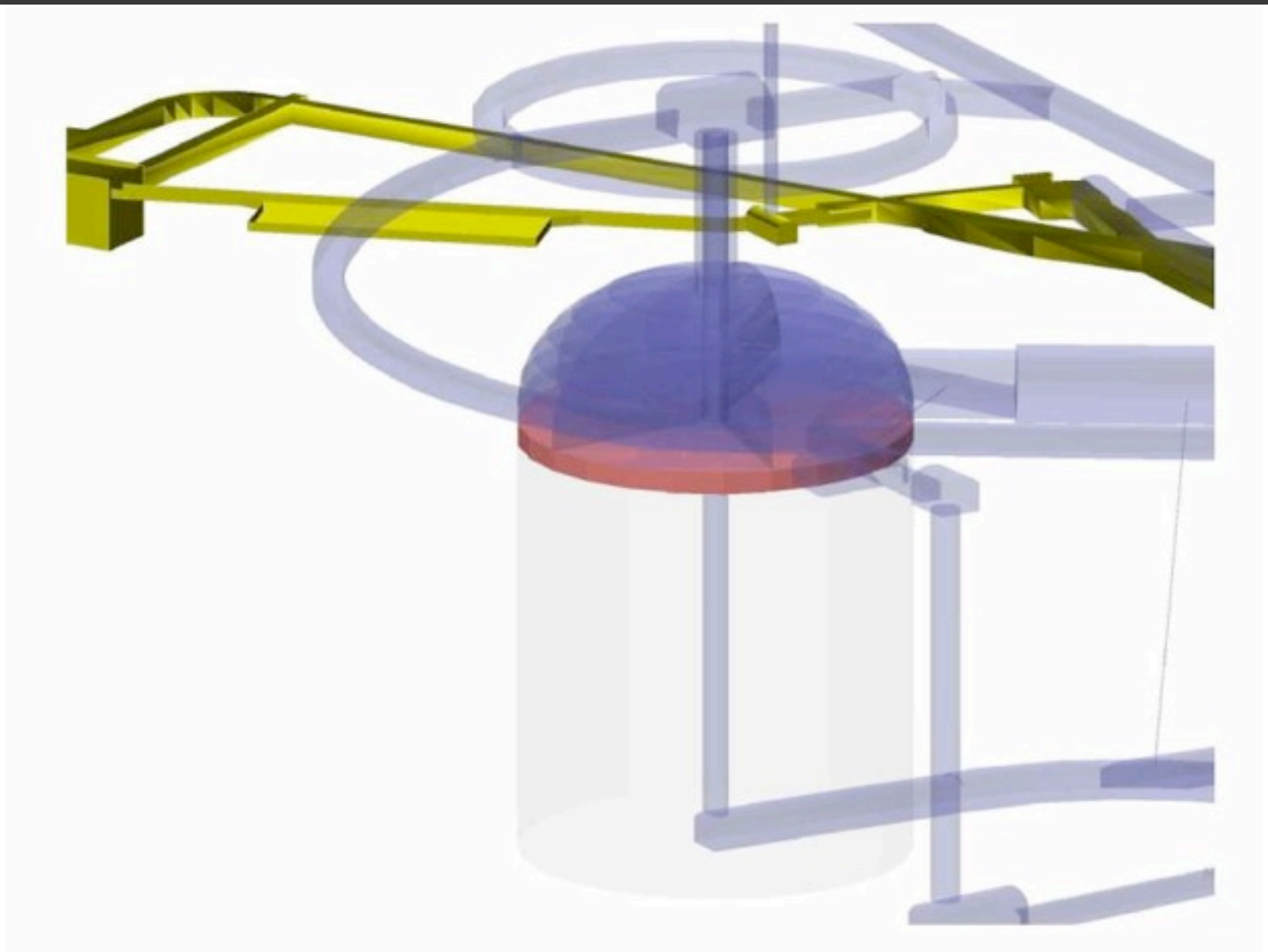

LC-1 Excavation & Support

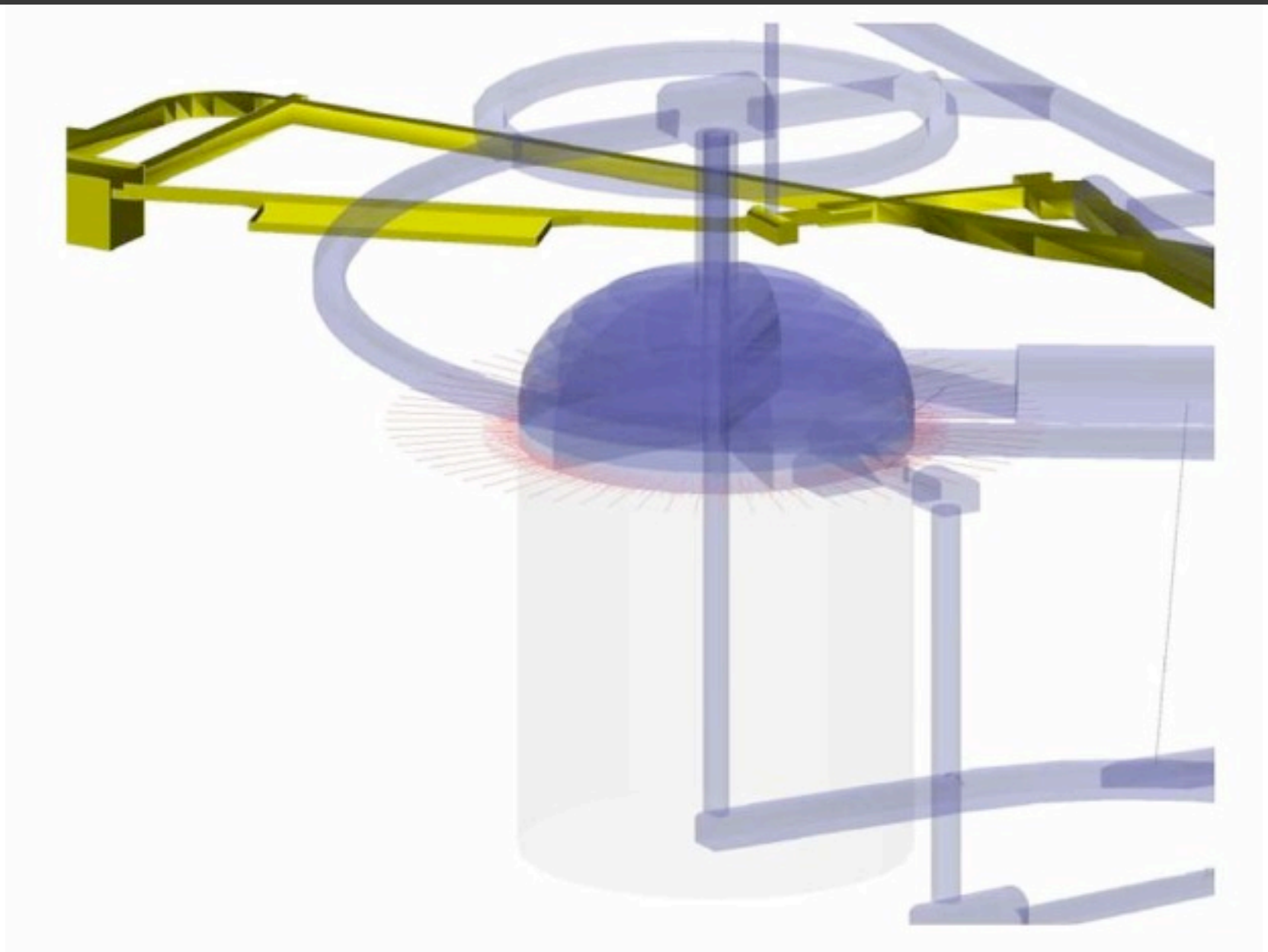

LC-1 Excavation & Support

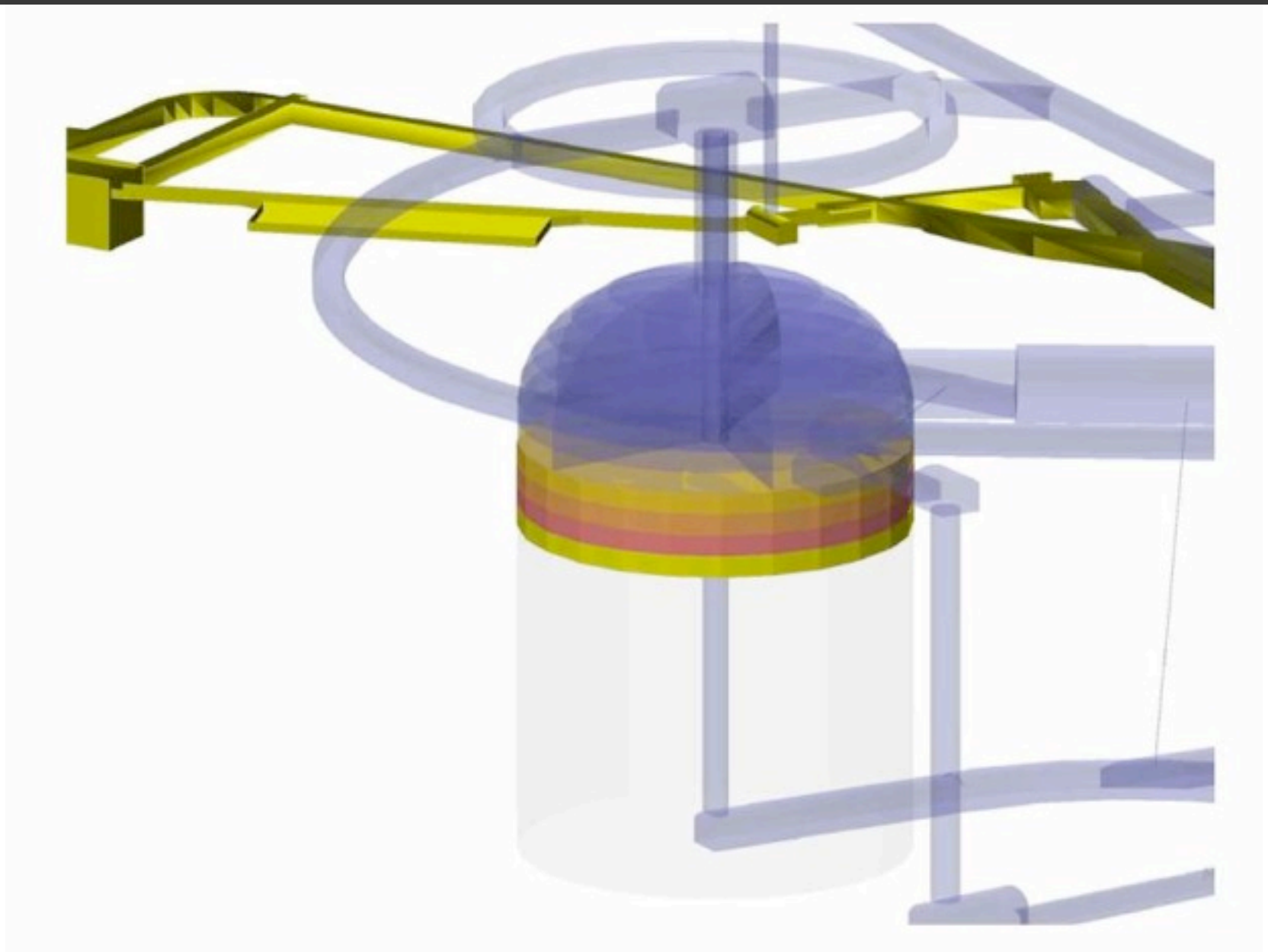

LC-1 Excavation & Support

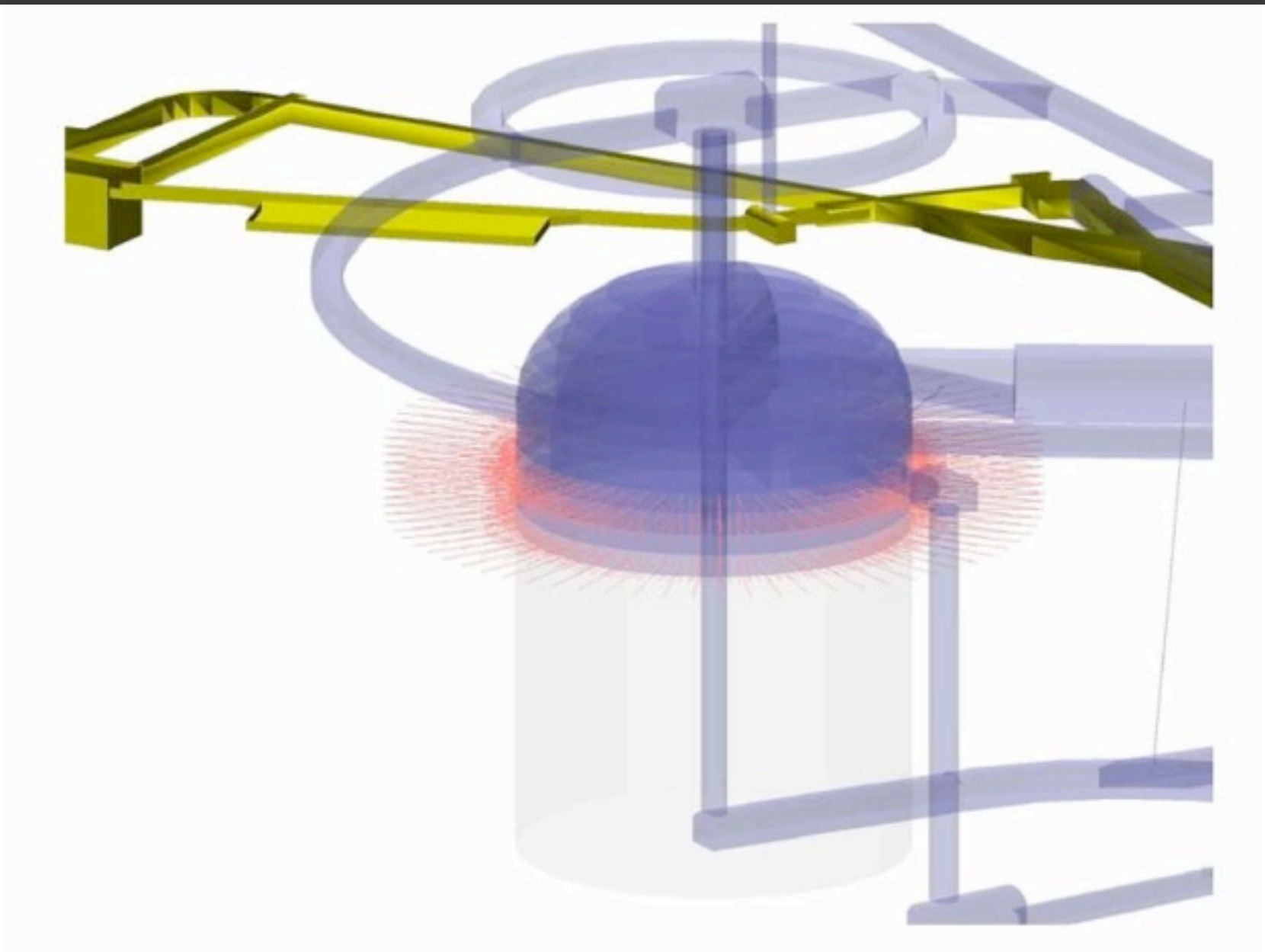

LC-1 Excavation & Support

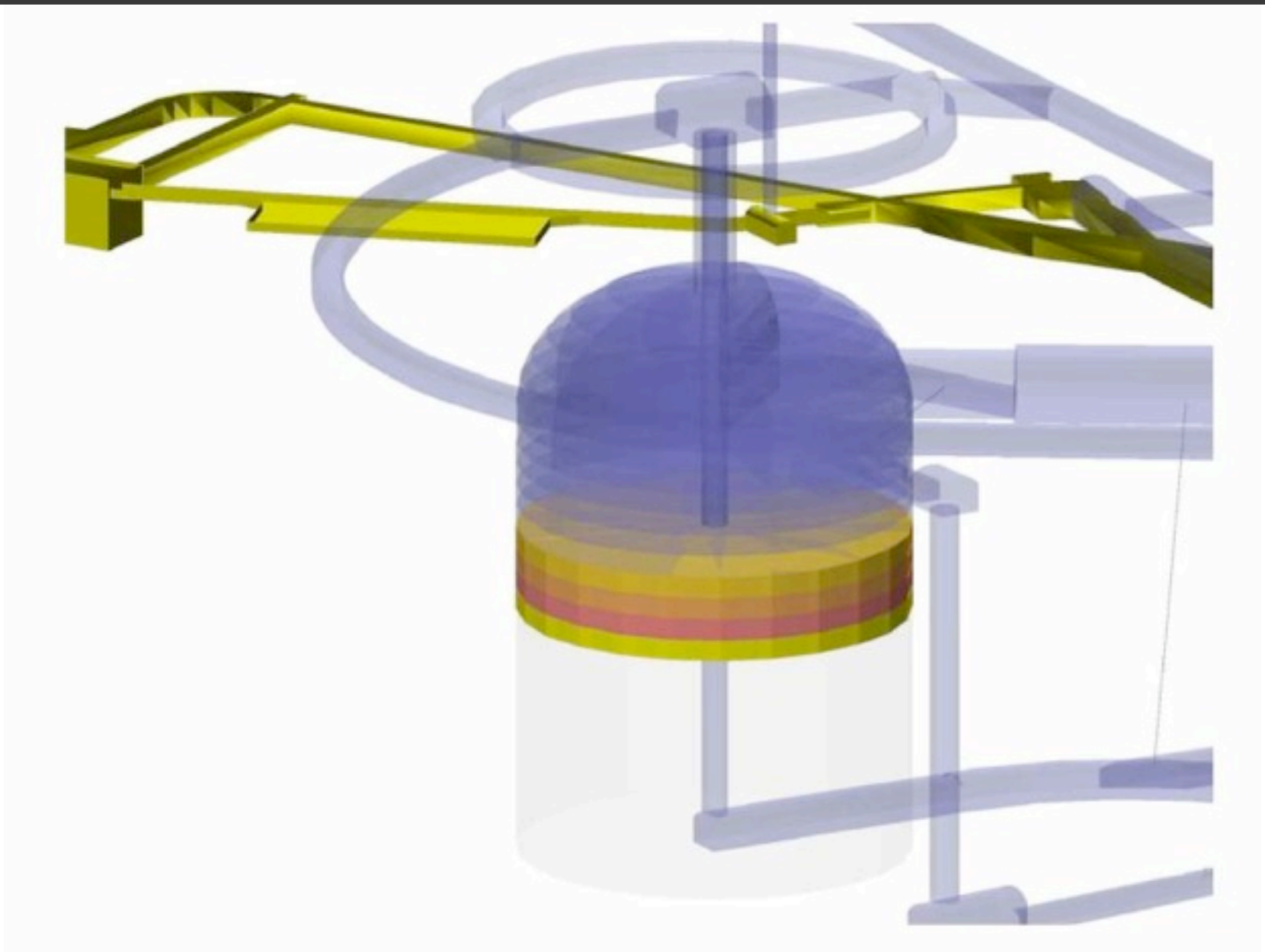

LC-1 Excavation & Support

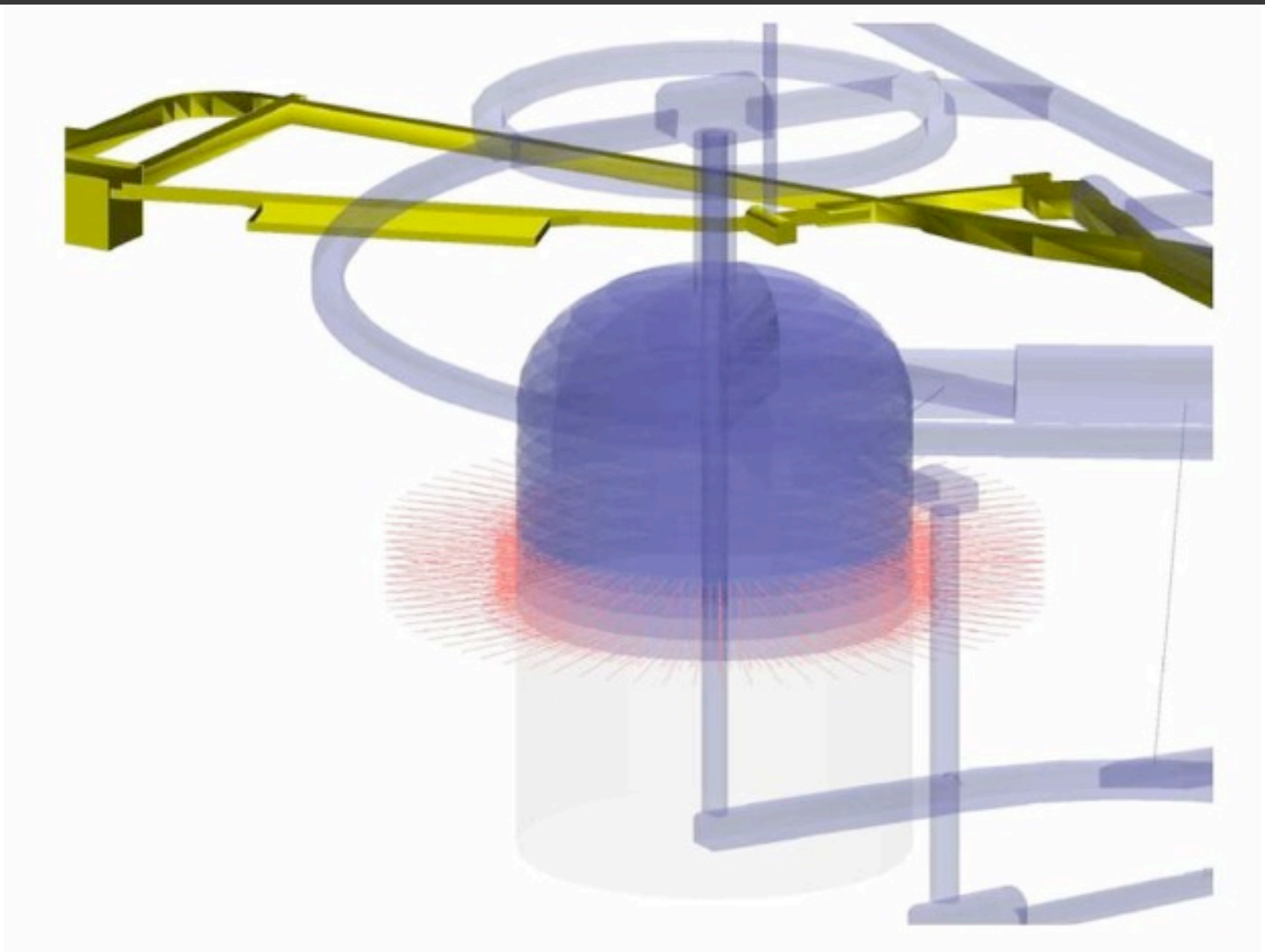

LC-1 Excavation & Support

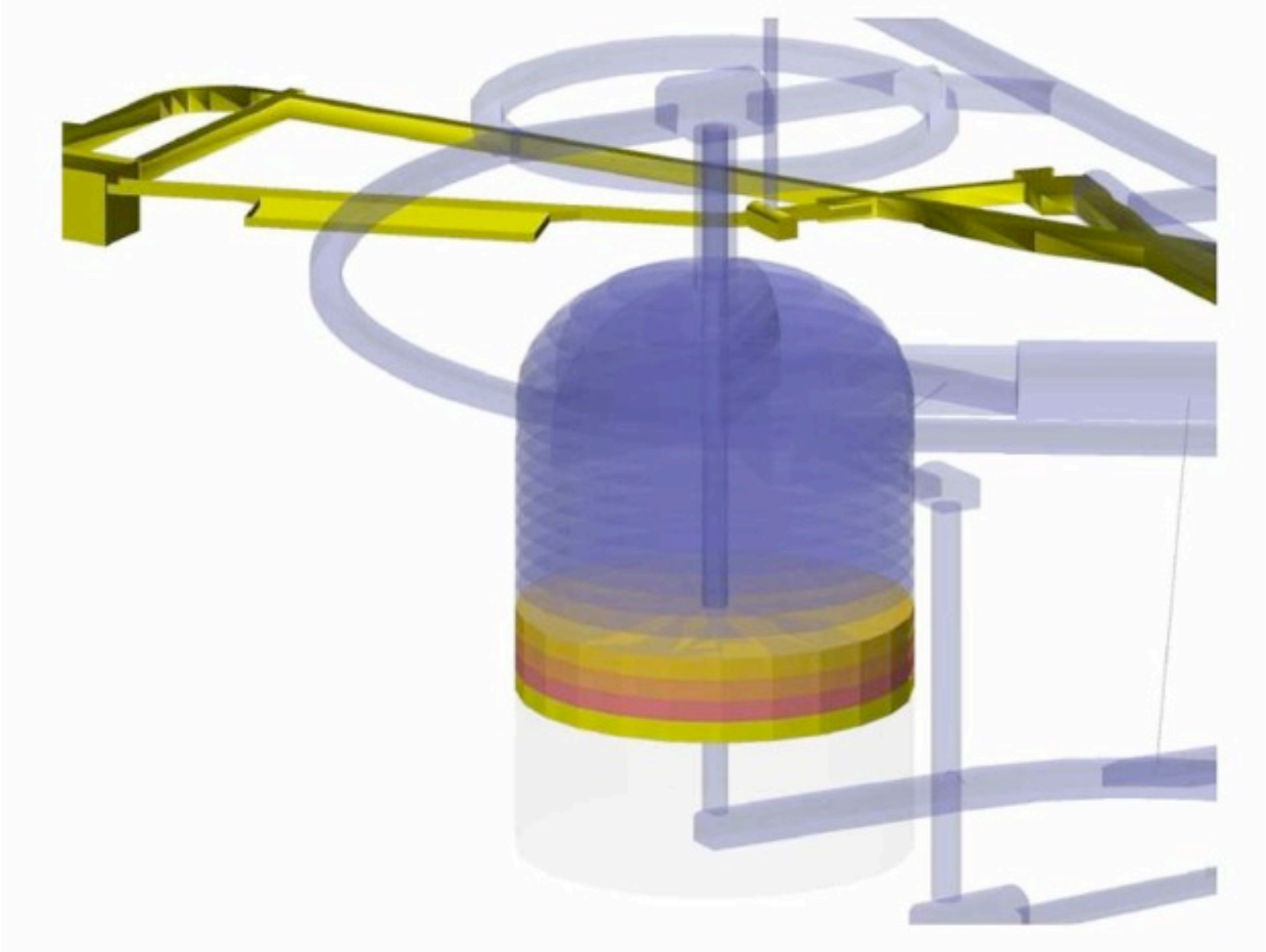

LC-1 Excavation & Support

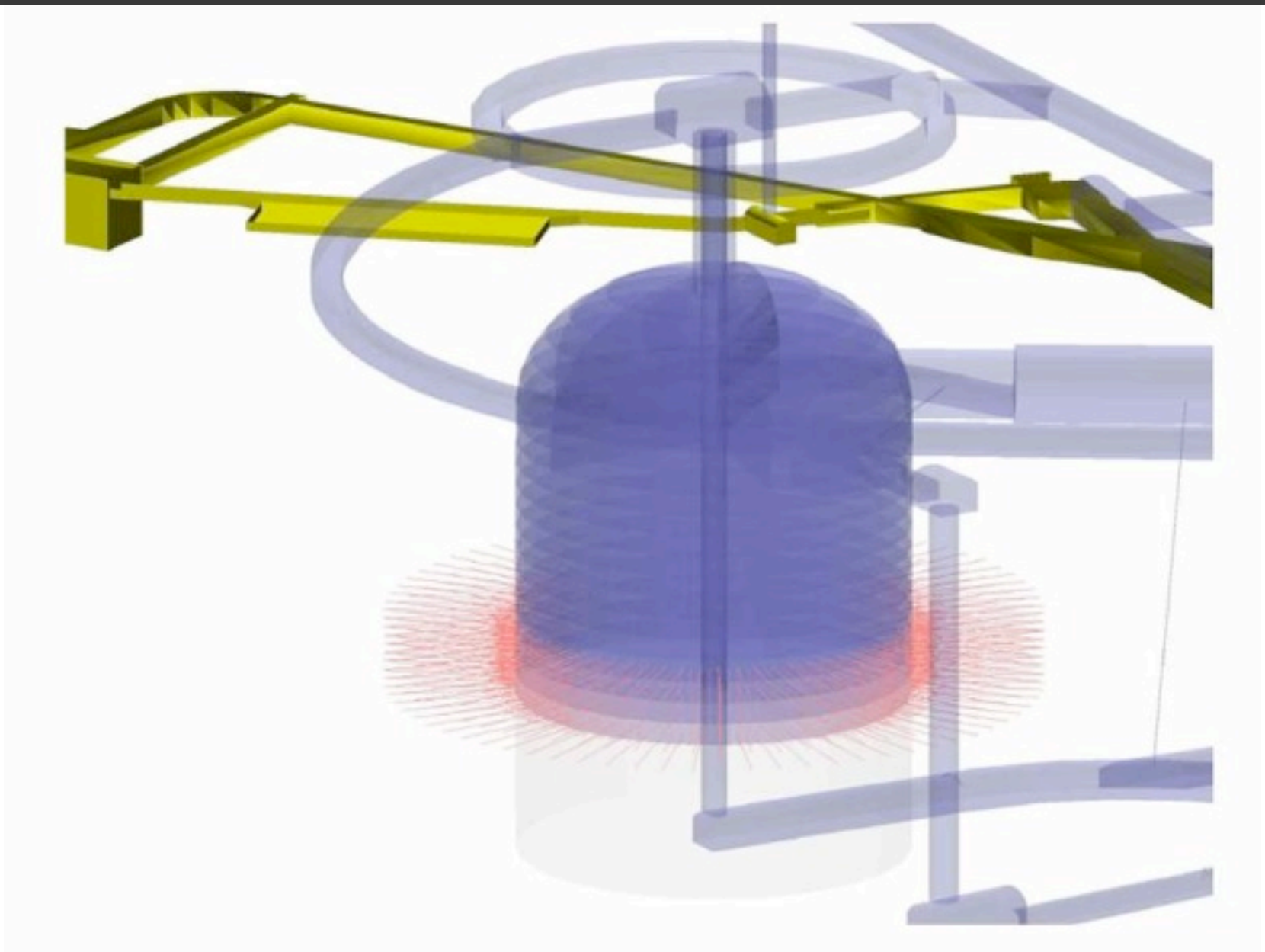

LC-1 Excavation & Support

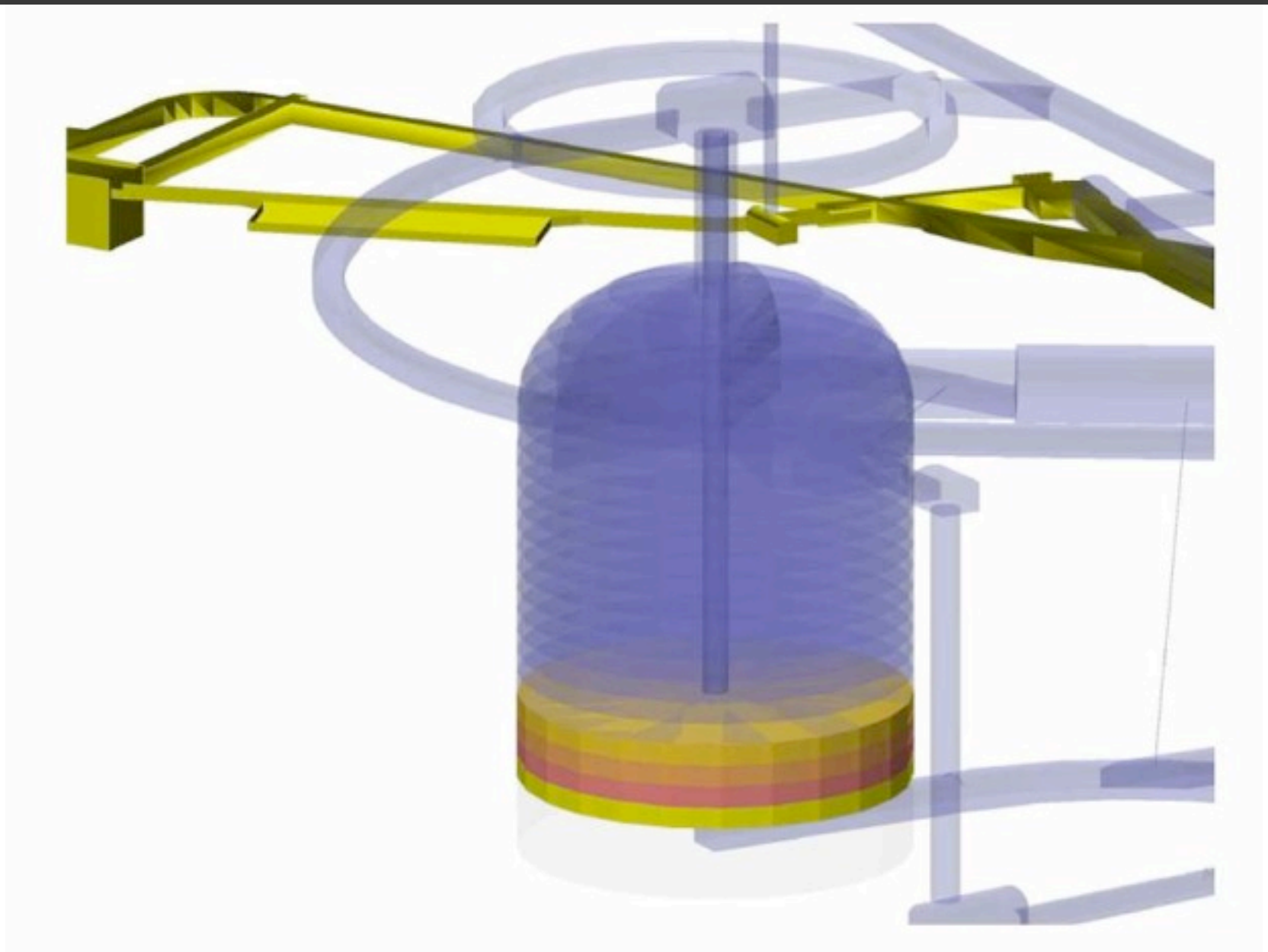

LC-1 Excavation & Support

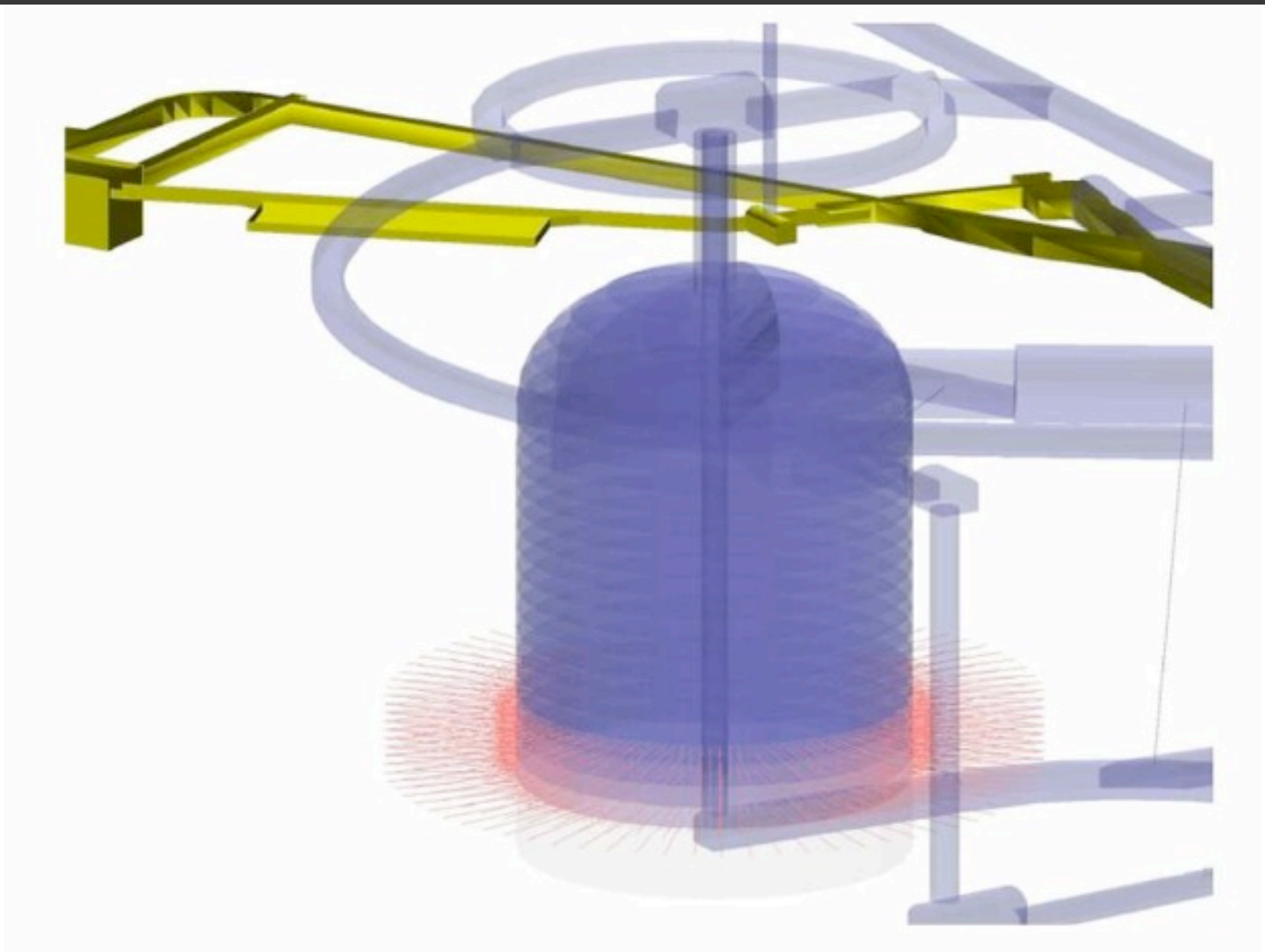

LC-1 Excavation & Support

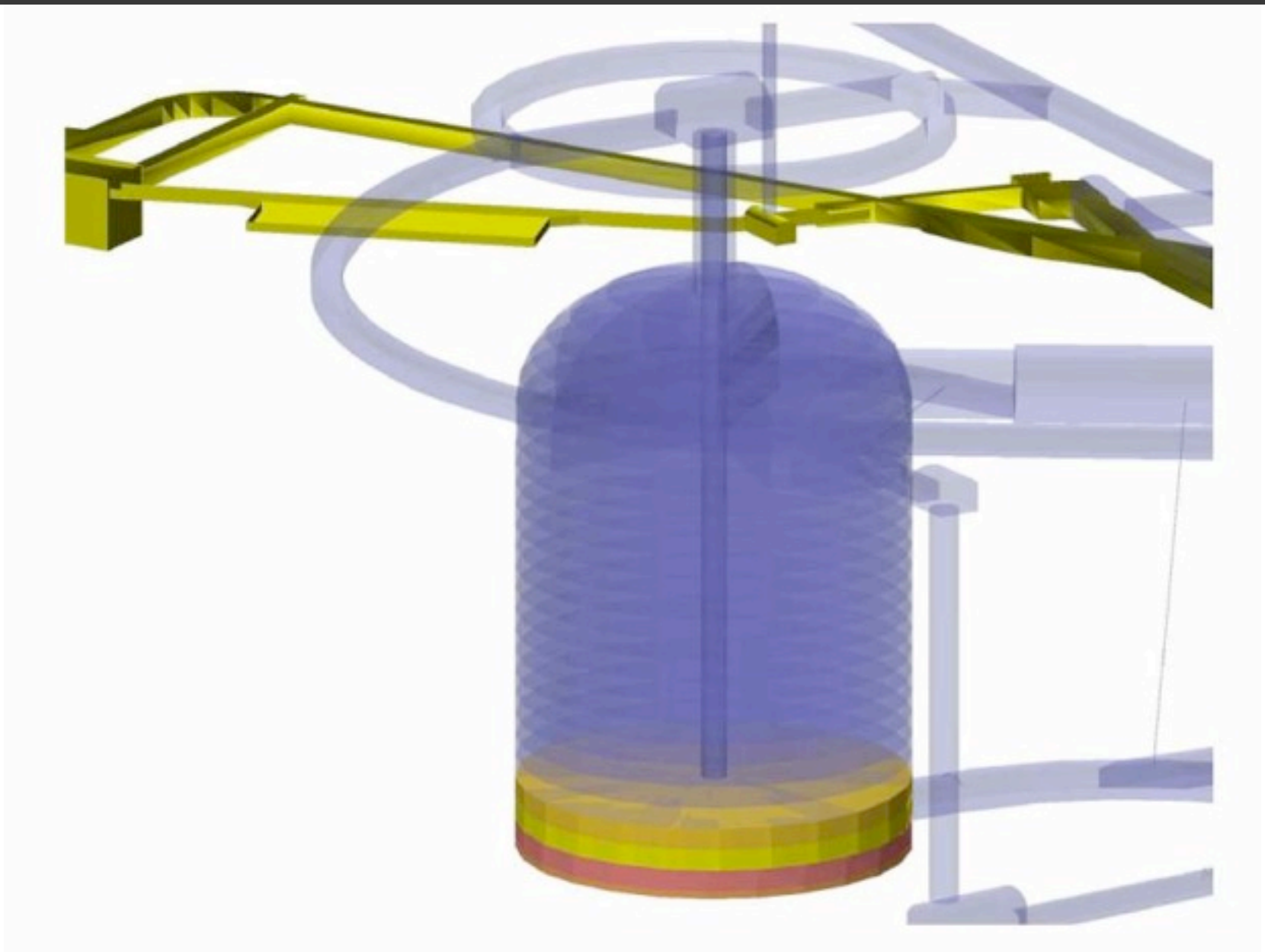

LC-1 Excavation & Support

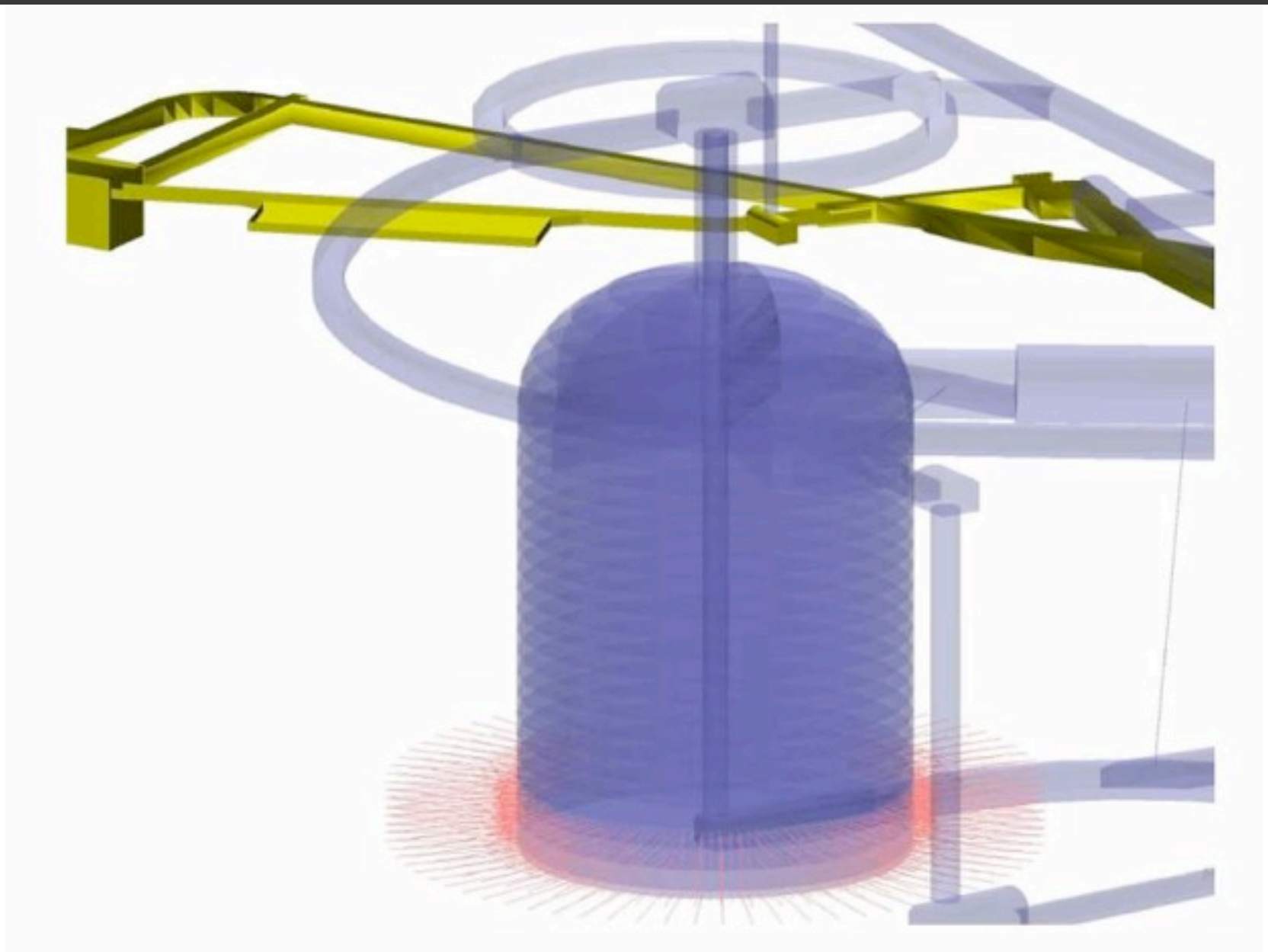

LC-1 Excavation & Support

