# Gov. Rounds and SD Science and Technology Authority complete land closing with Homestake

***Paves the way for the creation of an underground science laboratory at Lead, SD***

PIERRE, S.D. – Gov. Mike Rounds along with Dave Bozied, Chairperson of the South Dakota Science and Technology Authority (Authority) and Patrick Garver, Executive Vice President and General Counsel of Barrick Gold Corporation are pleased to announce the completion of the land transfer agreement of the Homestake Gold Mine in Lead, S.D. to the Authority.

"The transfer culminates a long cooperative effort between Homestake Mining Company, the state and the Authority," said the governor on the announcement. "It couldn't have happened without the continued patience and support of the people of South Dakota."

The Authority will begin moving into the facilities as soon as office renovations are completed.

"By filing the signed documents with the Lawrence County Register of Deeds, we officially complete the land transfer agreement," said the governor. "I am thankful for the encouragement and support of the Homestake Collaboration, our universities, and the entire scientific community. The transfer provides an opportunity for a new era for science and education in our state."

The Authority estimates that the budget for the Interim Laboratory, including capital requirements and operating expenses through the year 2012, will be approximately $32.1 million. The Authority controls, or has access to, approximately $44 million that could be committed to this purpose. Some of the immediate expenditures include $800,000 for the closure fund; $2.5 million in insurance premiums; and $10 million for the indemnification fund.

# DESIGN AND CONSTRUCTION OF A MODULAR MASSIVE DETECTOR AT THE HOMESTAKE LAB

- **Modular Mass – 100 Kilotons**
- **Modular Shape –Cylinder –50m dia x 50m high**
- **Depth – 4200 mwe (cosmic ray rate = 0.1Hz)**
- **Photocathode coverage – 25%**
- **Initial Detector – 3 modules (300 kilotons)**
- **Construction time - 5 years for 3 modules**
- **Cost - ~ $100 M / module**
- **Ultimate detector – 10 modules (1 Megaton)**


Mega Ton Dector
Xenon
Phase 1
Phase 2

# DETECTOR MODULE DESIGN CHARACTERISTICS

- **Excavation stability studies – O.K.**
- **(excavation is very similar to SuperK, ~ 25% larger in each linear dimension)**
- **Vertical cylinder with concrete liner and multi-layer water tight plastic liner**
- **(SuperKamiokande has a steel tank)**
- **Photomultiplier tubes can be inserted and removed without draining water**

# Presentation

- 1) Summarize excavation stability studies
- 2) Describe excavation procedure
- 3) Photomultiplier size, spacing & resolution
- 4) Budget and Timetable
- 5) Requirements for coming year

# SINGLE 100 KILOTON MODULE - HOMESTAKE

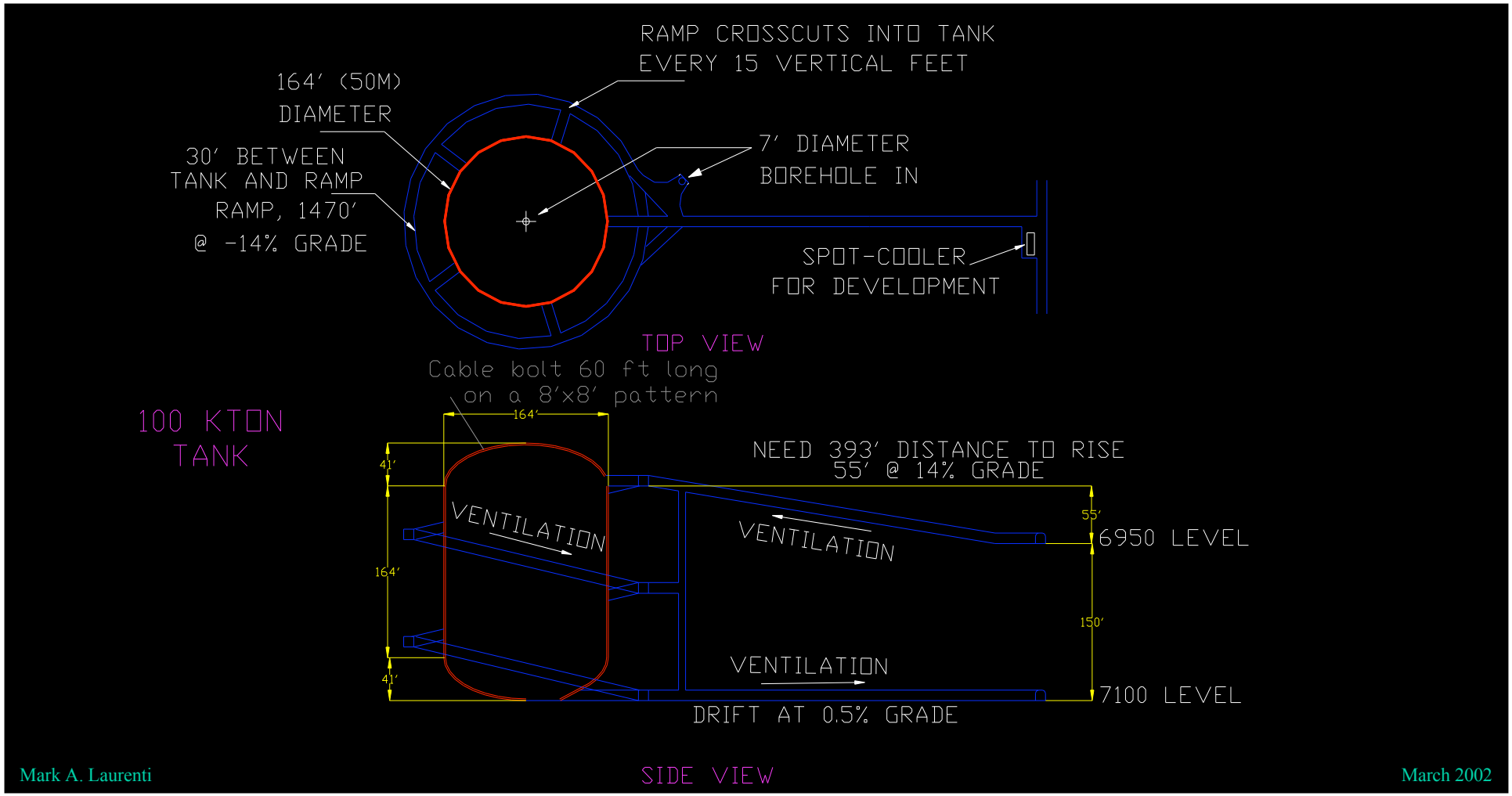

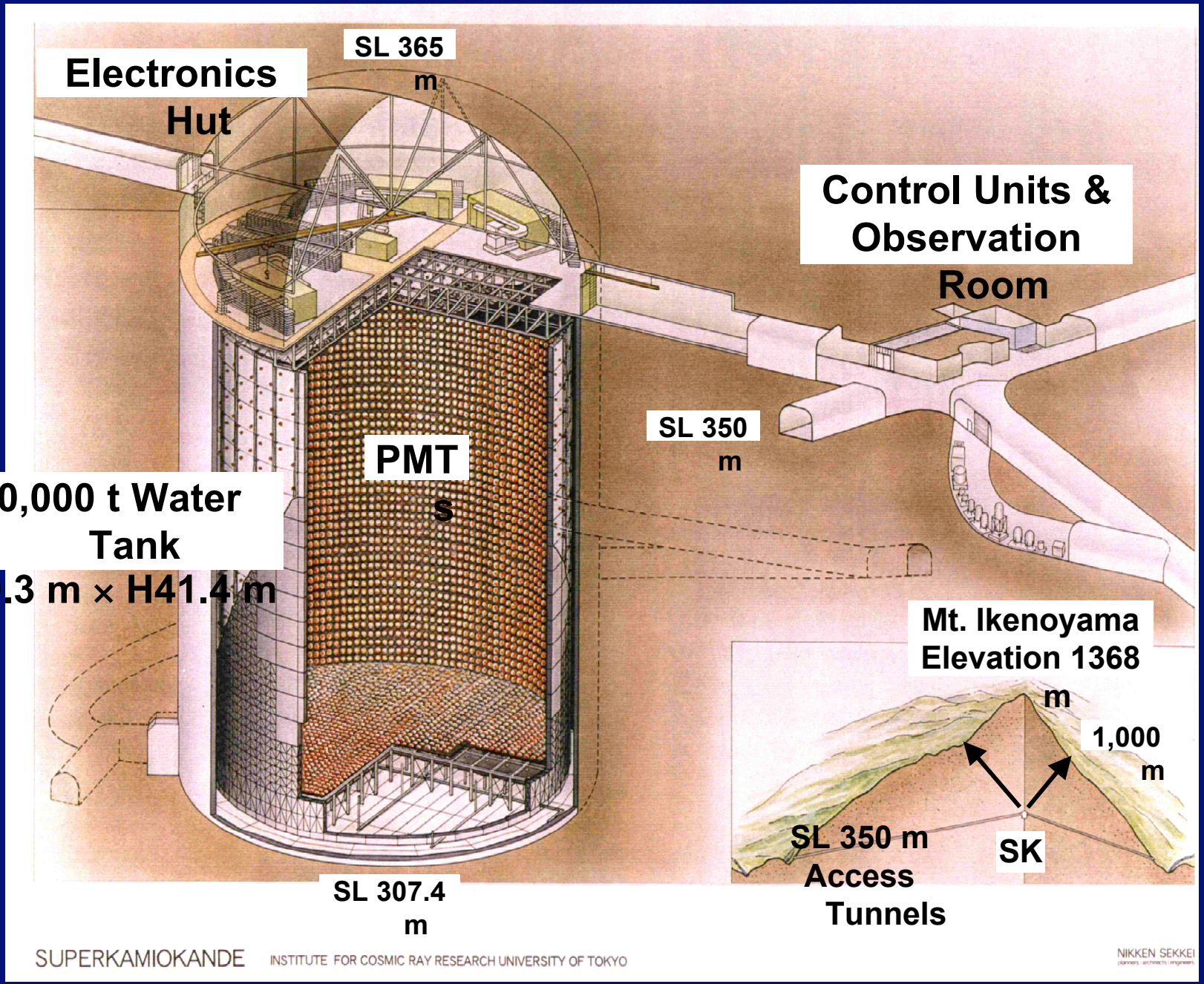
Electronics Hut
SL 365 m
Control Units & Observation Room
SL 350 m
PMTs
50,000 t Water Tank
ϕ39.3 m × H41.4 m
Mt. Ikenoyama
Elevation 1368 m
1,000 m
SL 350 m Access Tunnels
SK
SL 307.4 m
SUPERKAMIOKANDE
INSTITUTE FOR COSMIC RAY RESEARCH UNIVERSITY OF TOKYO
NIKKEN SEKKEI

# Feasibility Study of a Large Excavation at the Homestake Mine carried out by

**Doug Tesarik, Jeff Johnson, Karl Zipf**

**Hard Rock Stability Group – Spokane Laboratory of NIOSH (formally Bureau of Mines)**

# Methodology

- Case History
- FLAC-3d numeric modeling
- Empirical charts from tunneling

# Homestake Panel 3 – VCR Study

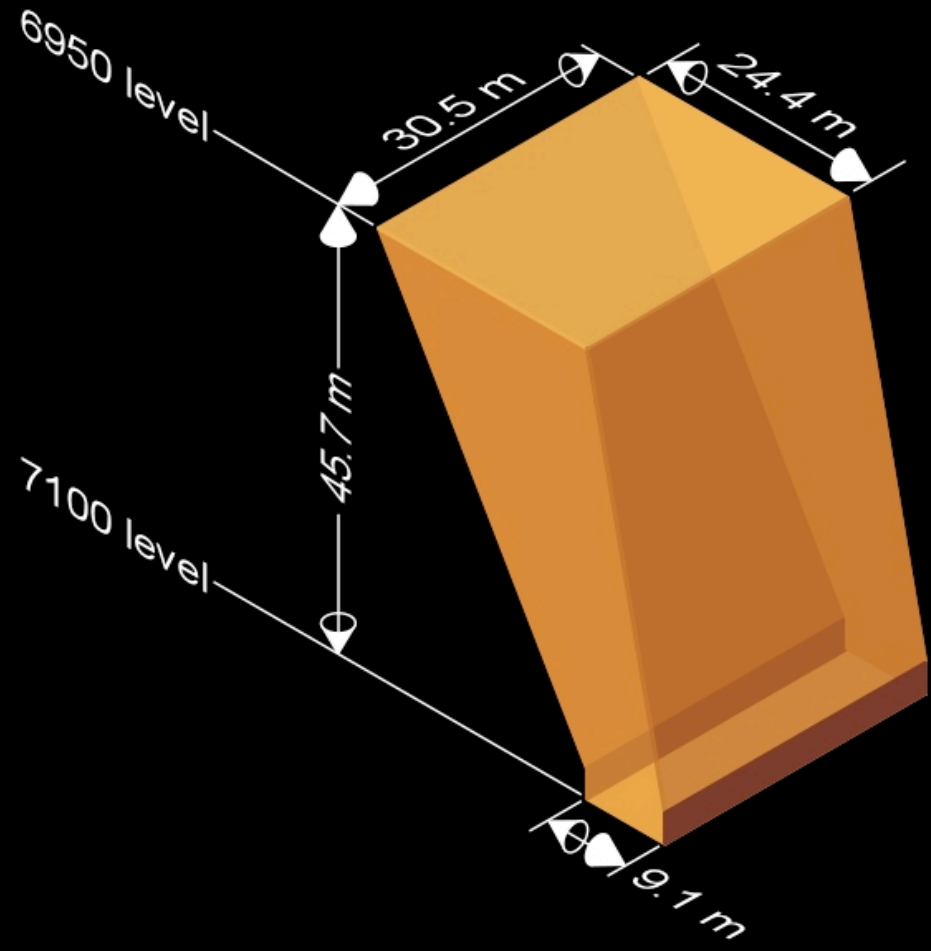


After Pariseau, Duan and Schmuck


FINISHER

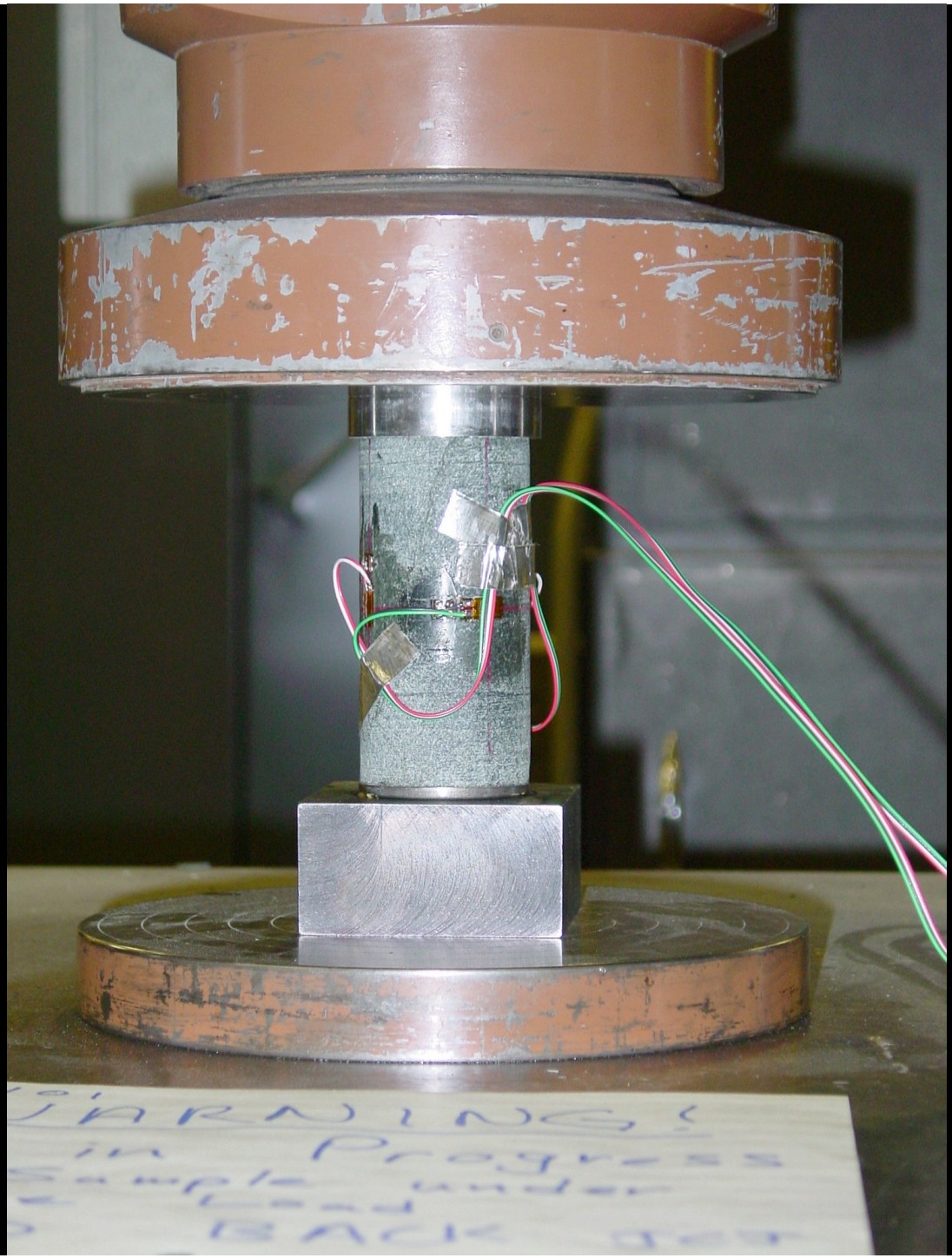
ARNING!
in Progress
ample under
Load
BACK

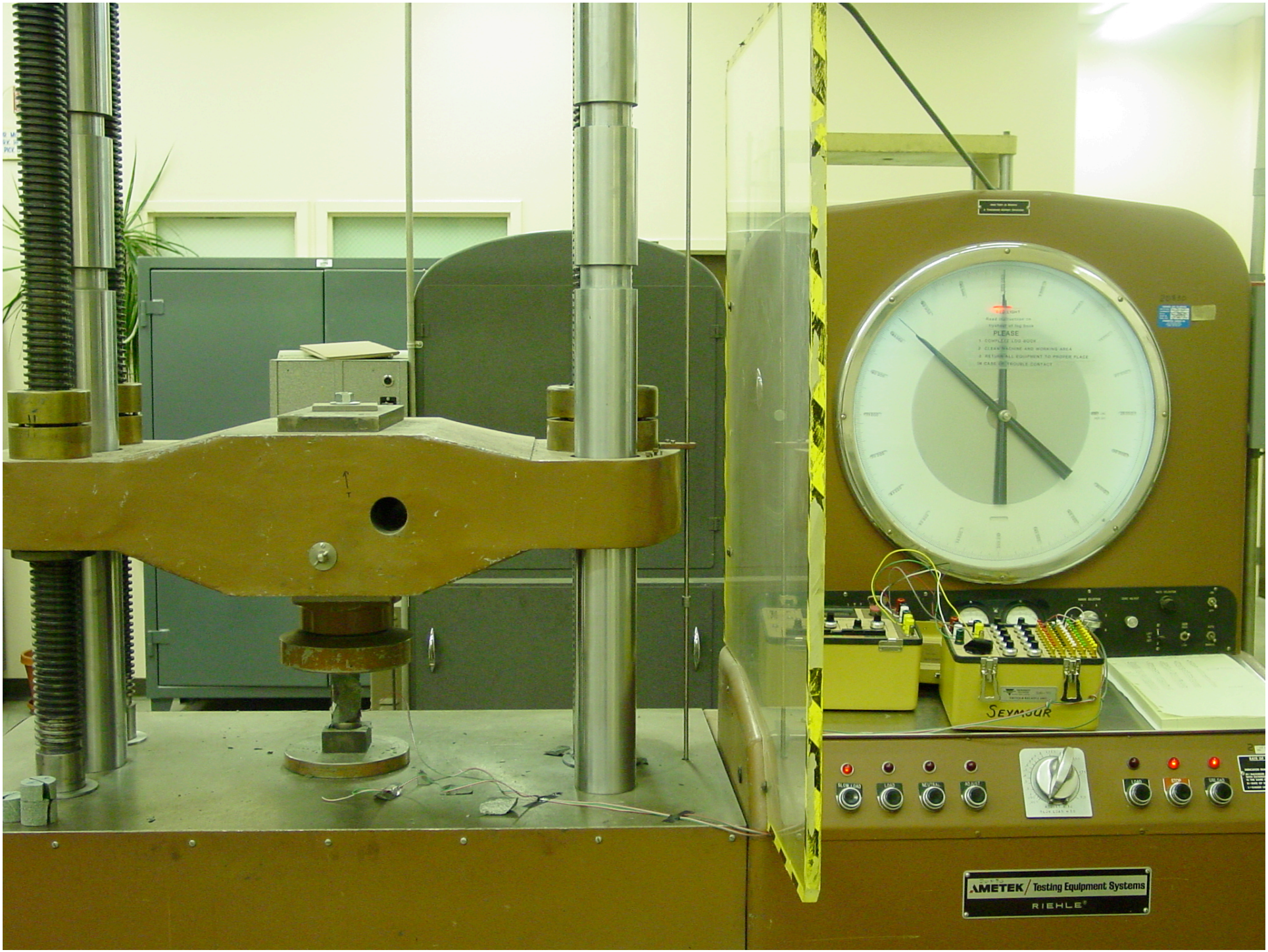
PLEASE
SEYMOUR
AMETEK / Testing Equipment Systems
RIEHLE

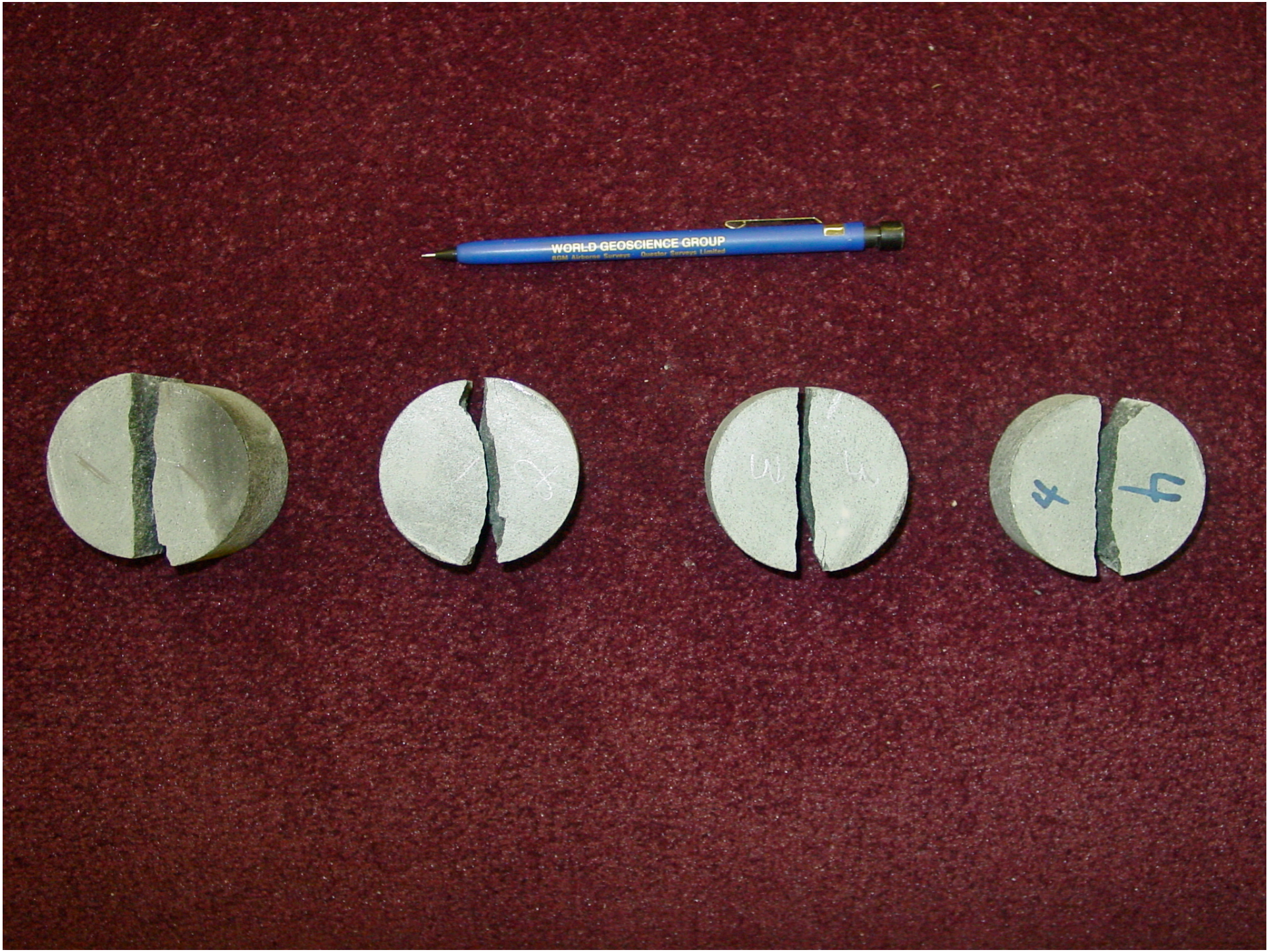
WORLD GEOSCIENCE GROUP
BGM Airborne Surveys Questar Surveys Limited

# YATES LABORATORY PROPERTIES

- E = 14,500,000 psi
- Tensile Strength = 1890 psi
- UCS = 28,800 psi!

# MATERIAL PROPERTY REDUCTION

- Modulus reduced 25%
- Strengths reduced 50%
- Cohesion = 30 deg.

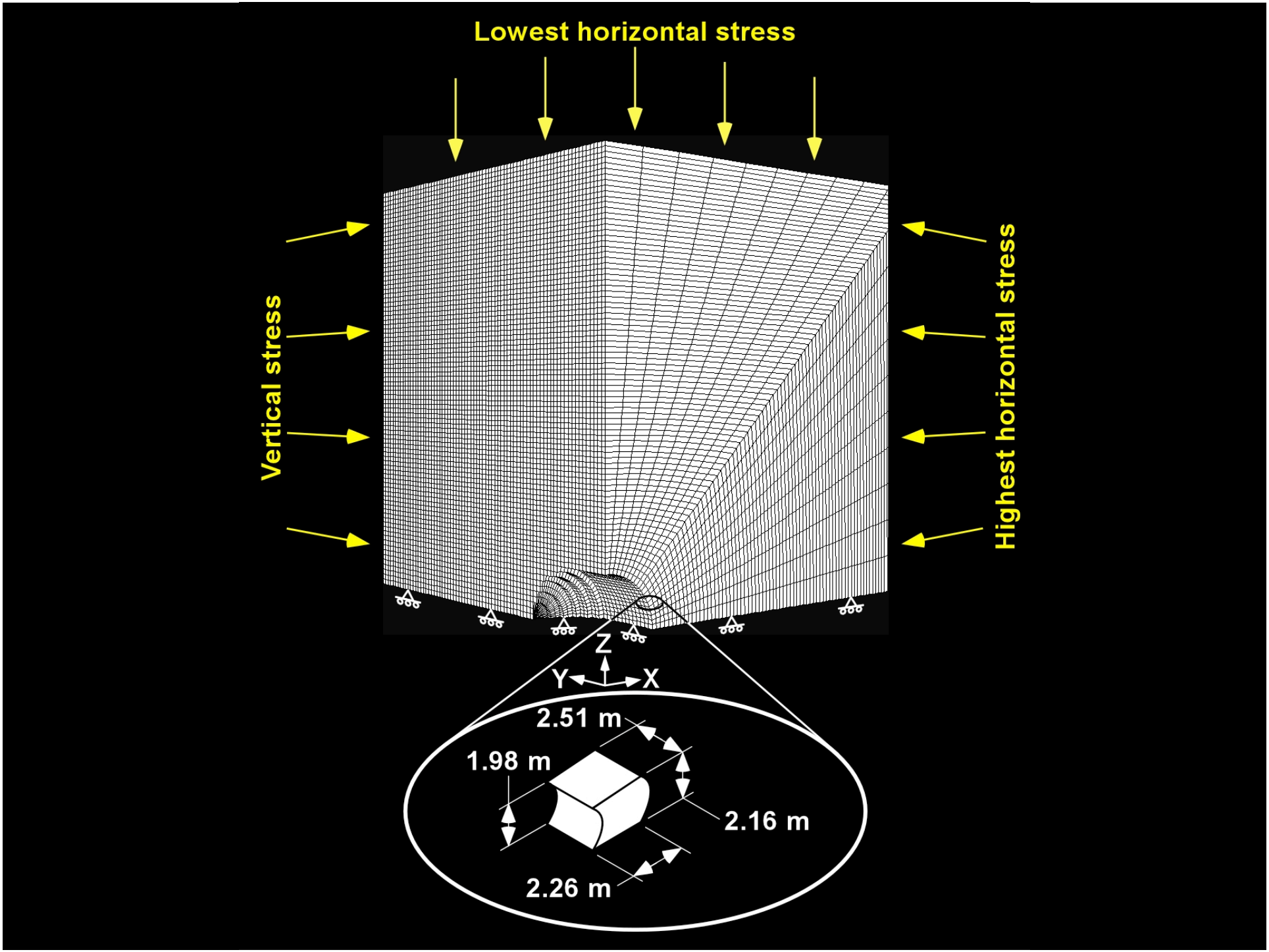
Lowest horizontal stress
Vertical stress
Highest horizontal stress
Z
Y
X
2.51 m
1.98 m
2.16 m
2.26 m

# EMPIRICAL METHODS

## Barton's Tunneling Quality Index

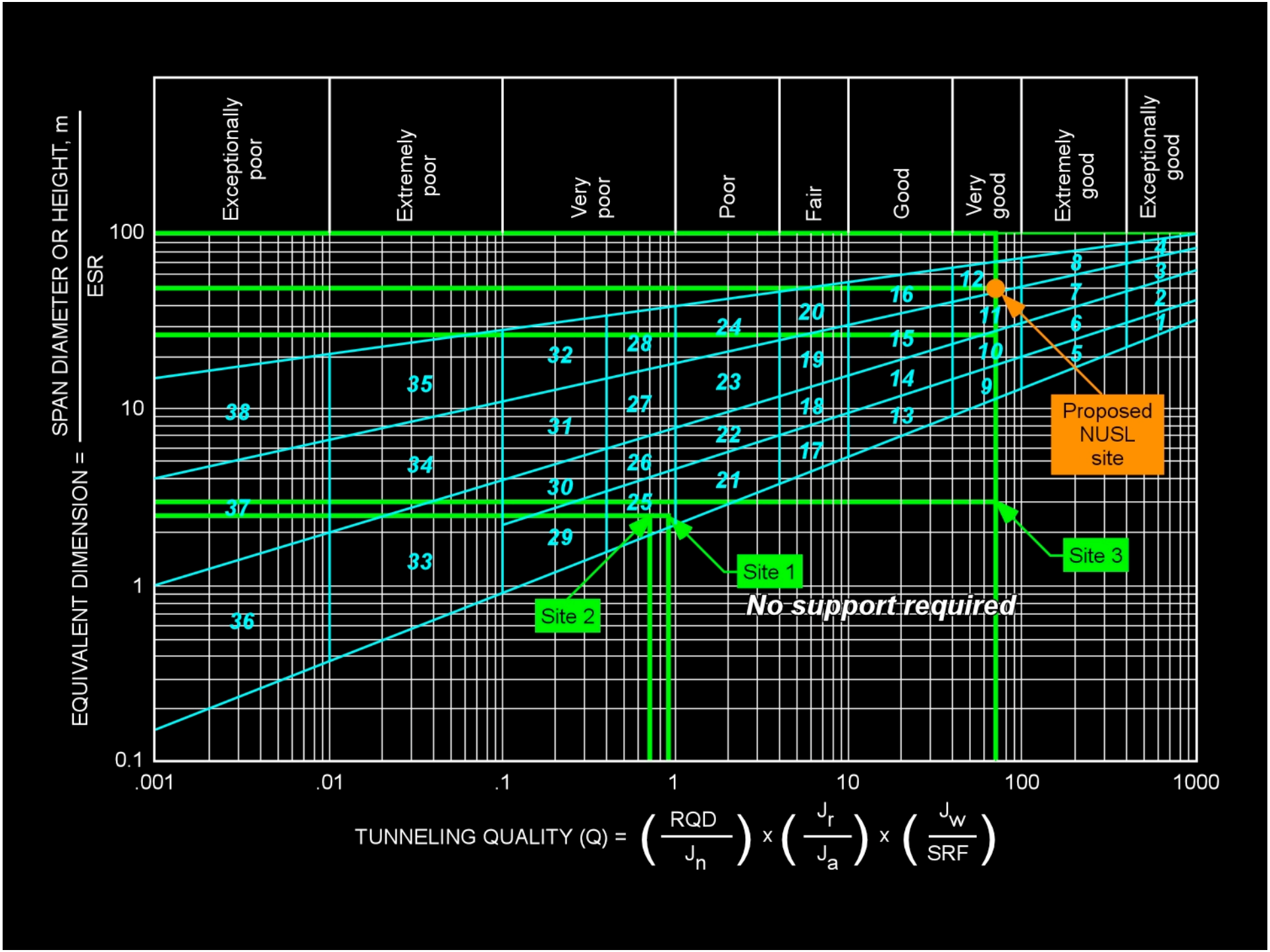
Exceptionally poor
Extremely poor
Very poor
Poor
Fair
Good
Very good
Extremely good
Exceptionally good
EQUIVALENT DIMENSION = SPAN DIAMETER OR HEIGHT, m / ESR
100
10
1
0.1
.001
.01
.1
1
10
100
1000
TUNNELING QUALITY (Q) = (RQD / Jn) x (Jr / Ja) x (Jw / SRF)
Proposed NUSL site
Site 1
Site 2
Site 3
No support required

# RECOMMENDED ROOF SUPPORT - BARTON

- TENSIONED BOLTS
- 2 – 3-m SPACING

# EMPIRICAL METHODS

GRIMSTAD AND BARTON

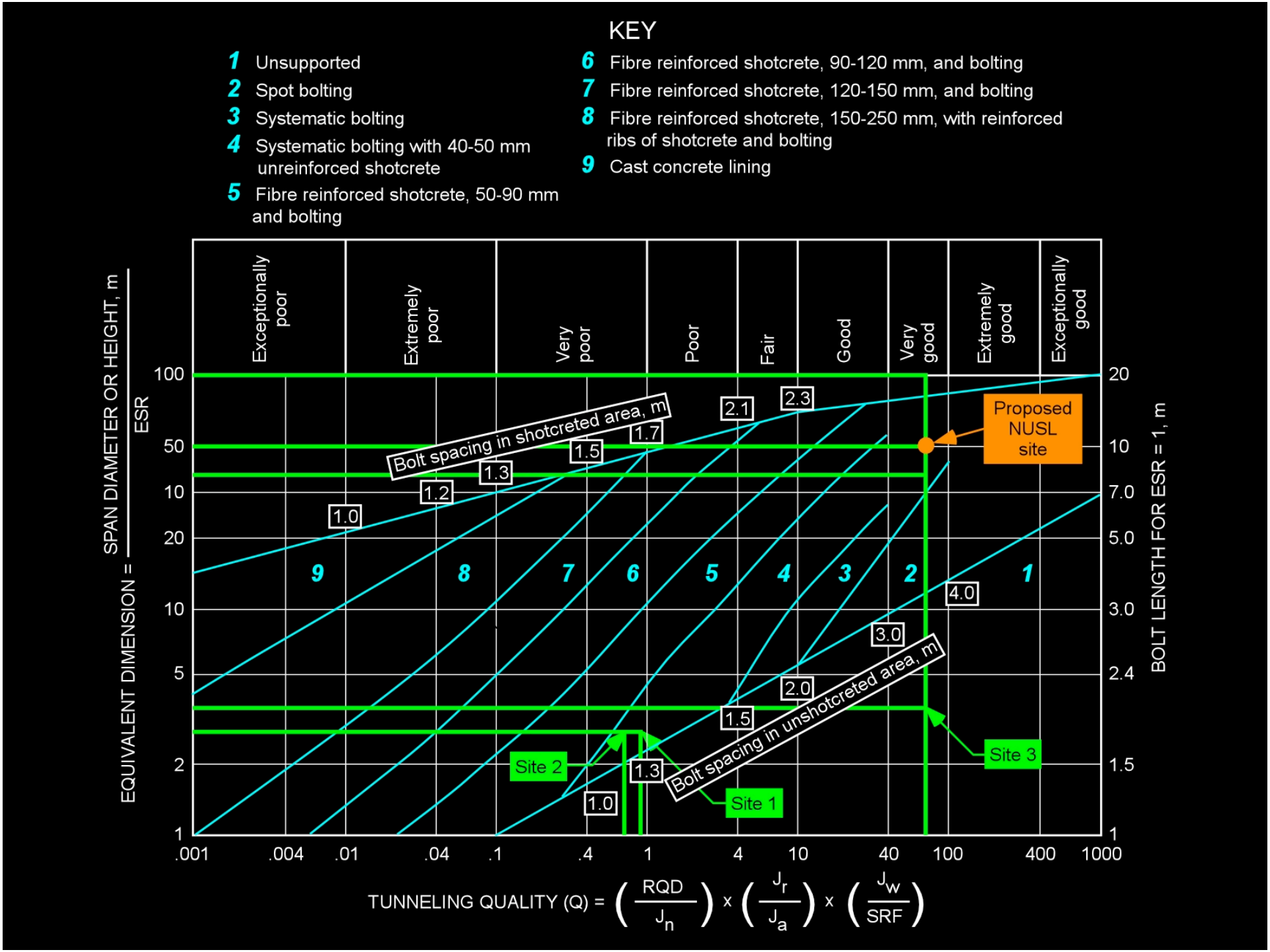
KEY
1 Unsupported
2 Spot bolting
3 Systematic bolting
4 Systematic bolting with 40-50 mm unreinforced shotcrete
5 Fibre reinforced shotcrete, 50-90 mm and bolting
6 Fibre reinforced shotcrete, 90-120 mm, and bolting
7 Fibre reinforced shotcrete, 120-150 mm, and bolting
8 Fibre reinforced shotcrete, 150-250 mm, with reinforced ribs of shotcrete and bolting
9 Cast concrete lining
Exceptionally poor
Extremely poor
Very poor
Poor
Fair
Good
Very good
Extremely good
Exceptionally good
EQUIVALENT DIMENSION = SPAN DIAMETER OR HEIGHT, m / ESR
BOLT LENGTH FOR ESR = 1, m
Bolt spacing in shotcreted area, m
Bolt spacing in unshotcreted area, m
Proposed NUSL site
Site 1
Site 2
Site 3
TUNNELING QUALITY (Q) = (RQD/Jn) x (Jr/Ja) x (Jw/SRF)

# RECOMMENDED ROOF SUPPORT – GRIMSTAD AND BARTON

- “SYSTEMATIC” BOLTING
- 5-mm SHOTCRETE

- NO “SHOWSTOPPERS”
- A COMPREHENSIVE ROCK MECHANICS STUDY IS MERITED
  - GEOLGICAL INVESTIGATION
  - ANISOTROPIC MODELING ?
  - IN SITU STRESS MEASUREMENTS

# SINGLE 100 KILOTON MODULE - HOMESTAKE

## Year One

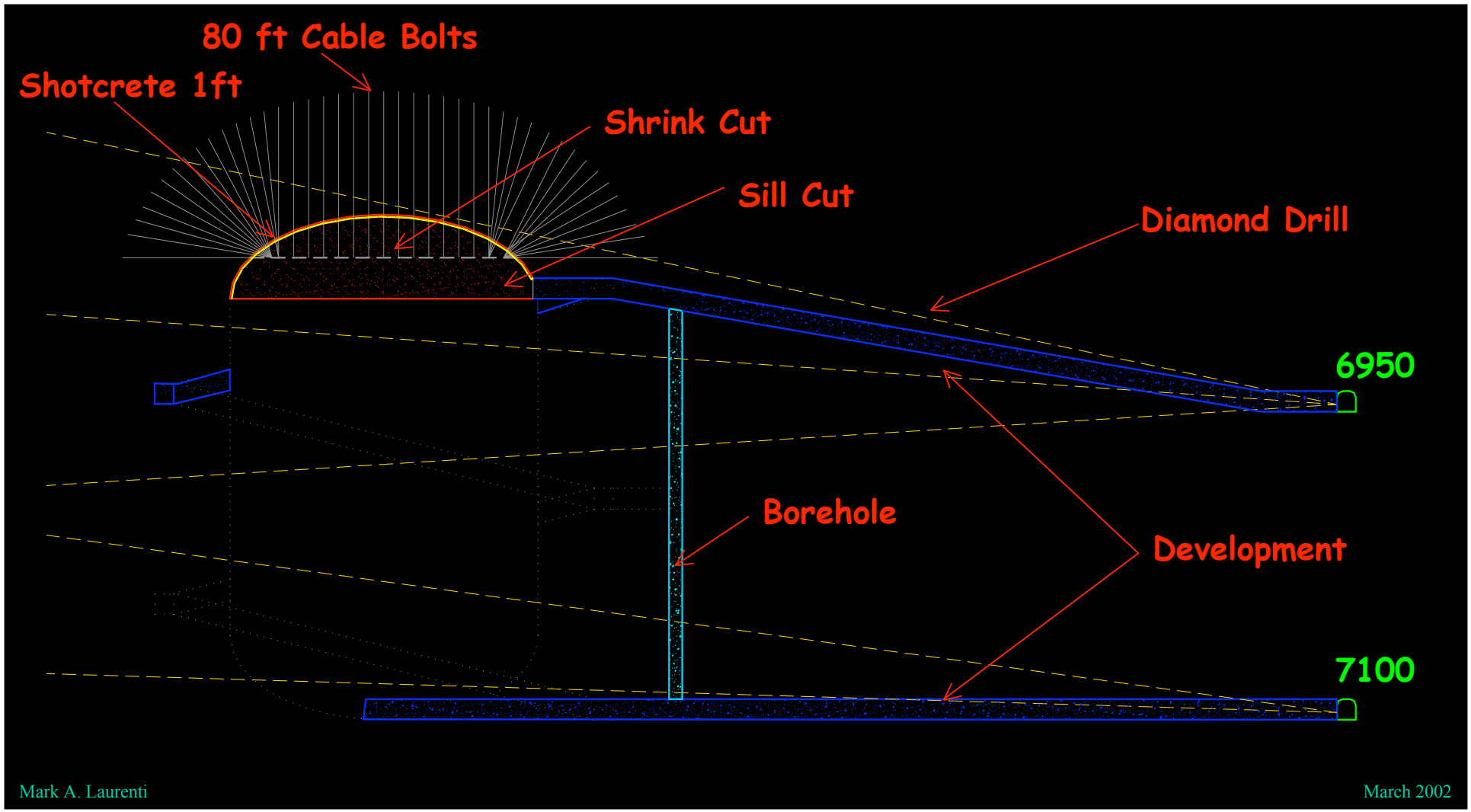

# SINGLE 100 KILOTON MODULE-HOMESTAKE

## Year Two

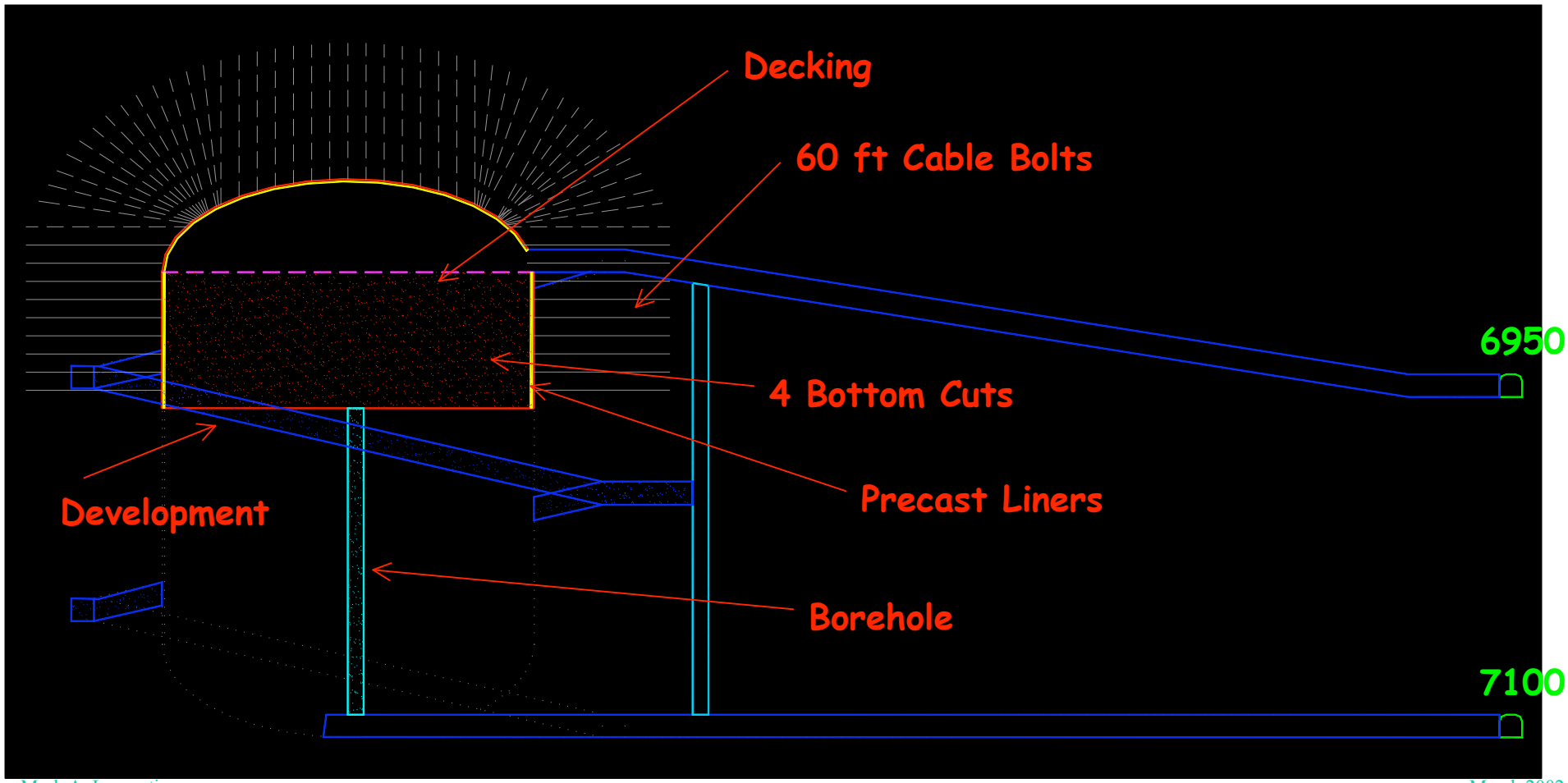

# SINGLE 100 KILOTON MODULE - HOMESTAKE

## Year Three

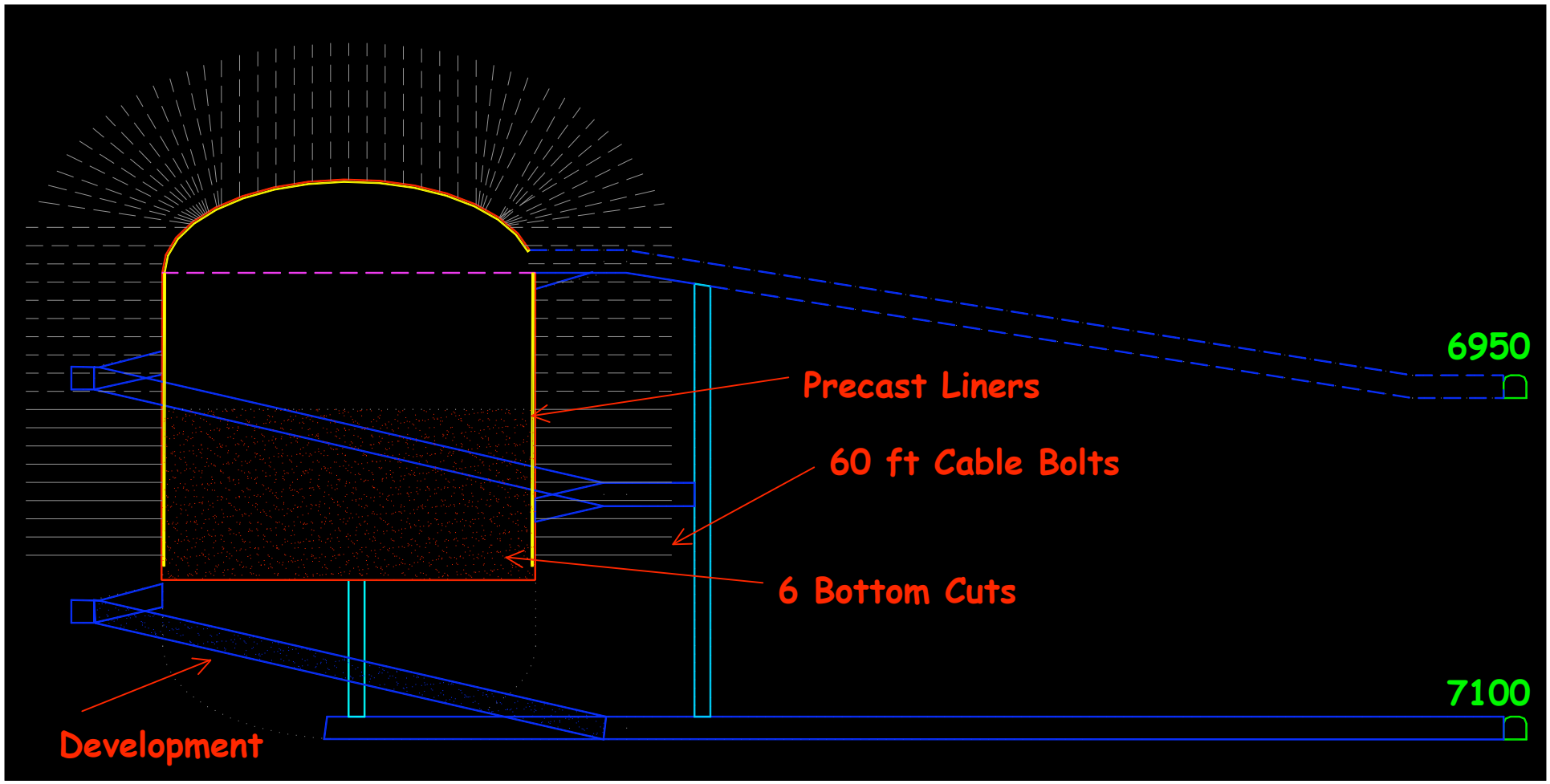

# SINGLE 100 KILOTON MODULE - HOMESTAKE

## Year Four

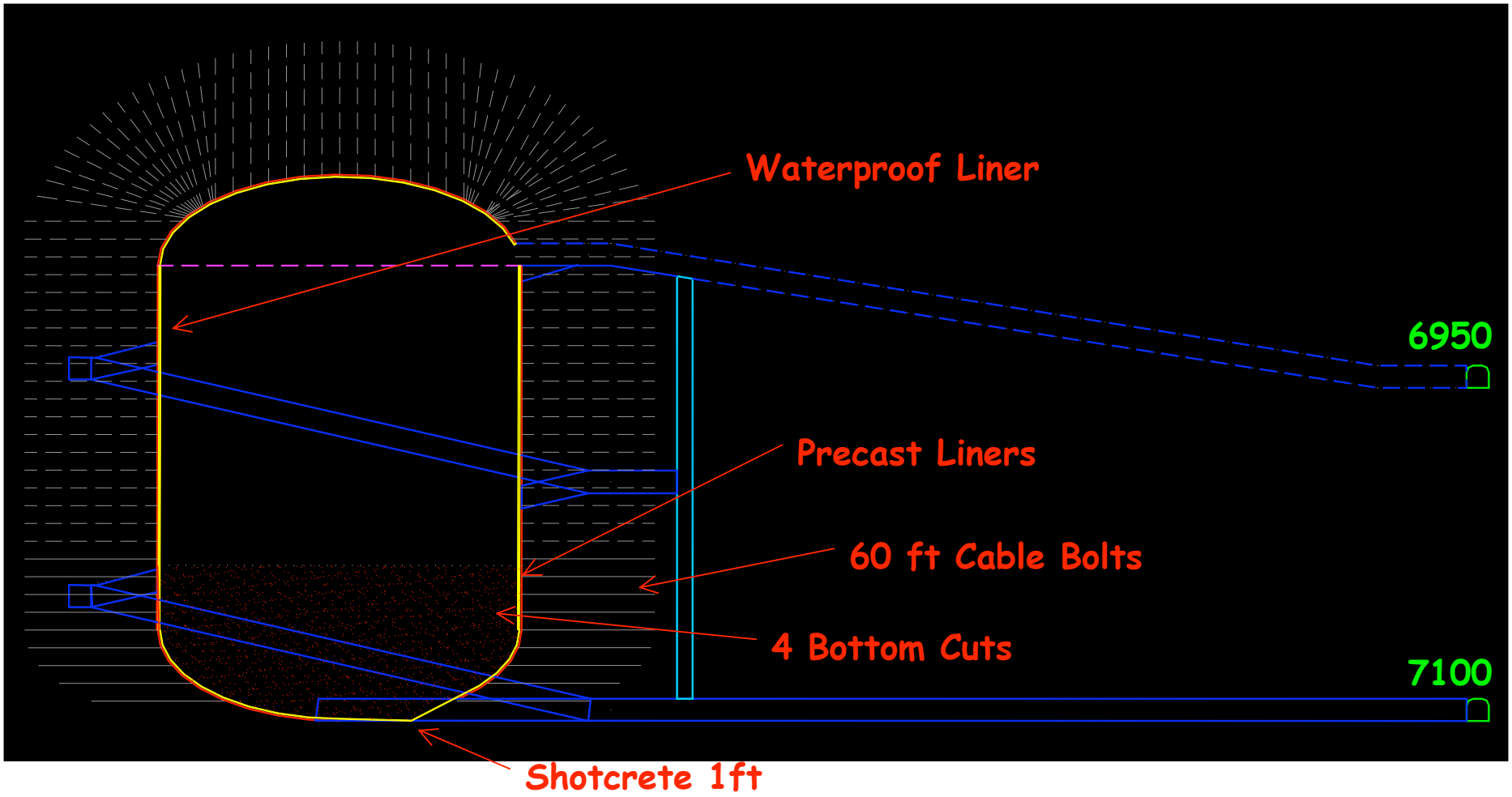

# Excavation Sequence of Super-KAMIOKANDE

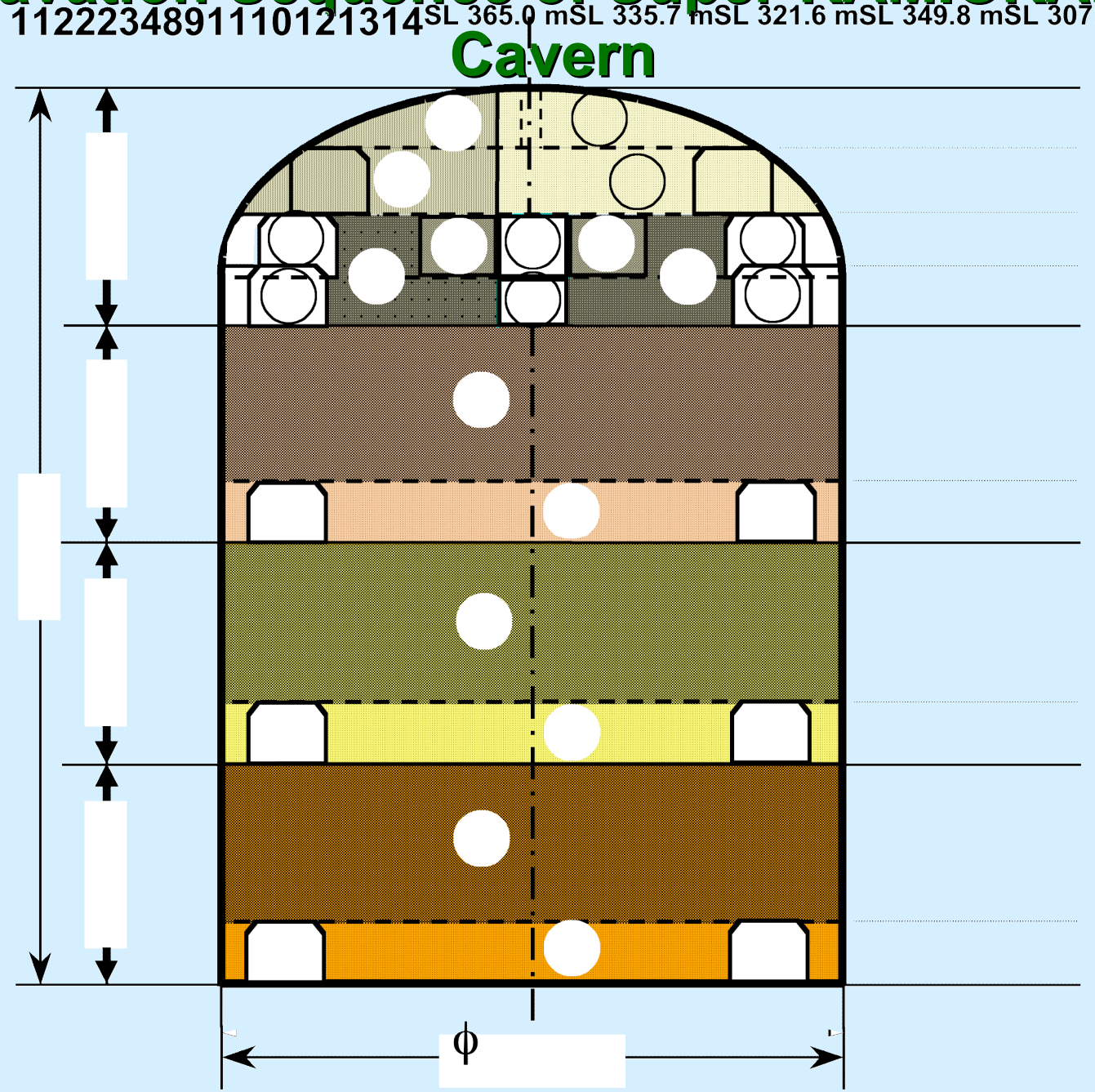

# Excavation Procedure for the Rooftop of the Cavern with Pre-Cablebolt Installation

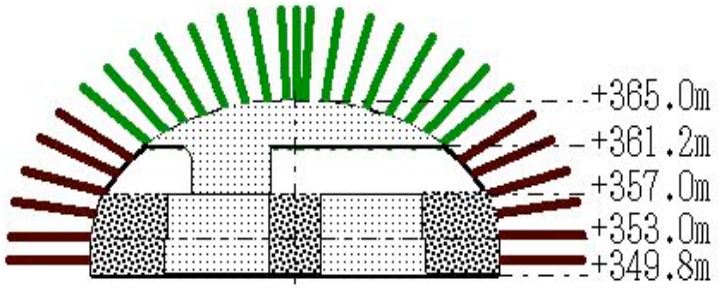


(a) Pre-cablebolting on a flat immediate roof.

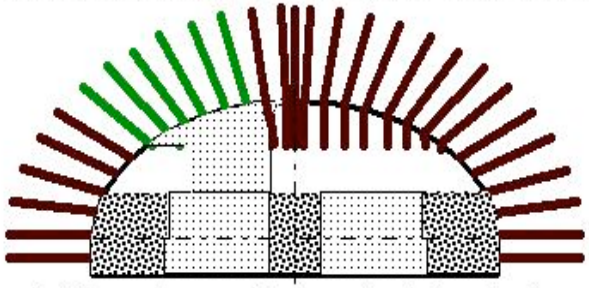

(b) Upward blasting of one half of the rooftop.

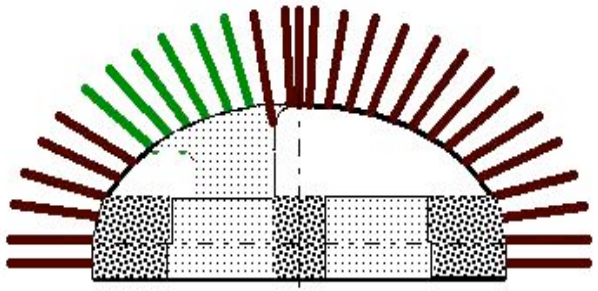

(c) Shotcreting & rockbolting on the rooftop surface.

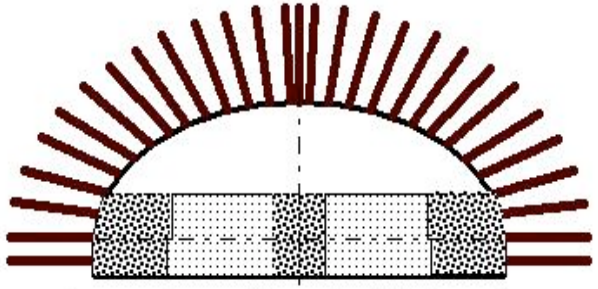

(d) Excavating the other half in the same manner.

**Long Cablebolts were Anchored Upwardly before Excavating 1st Half Sphere of the Rooftop.**

**2nd Half Sphere was Shaped in the Same Procedure.**



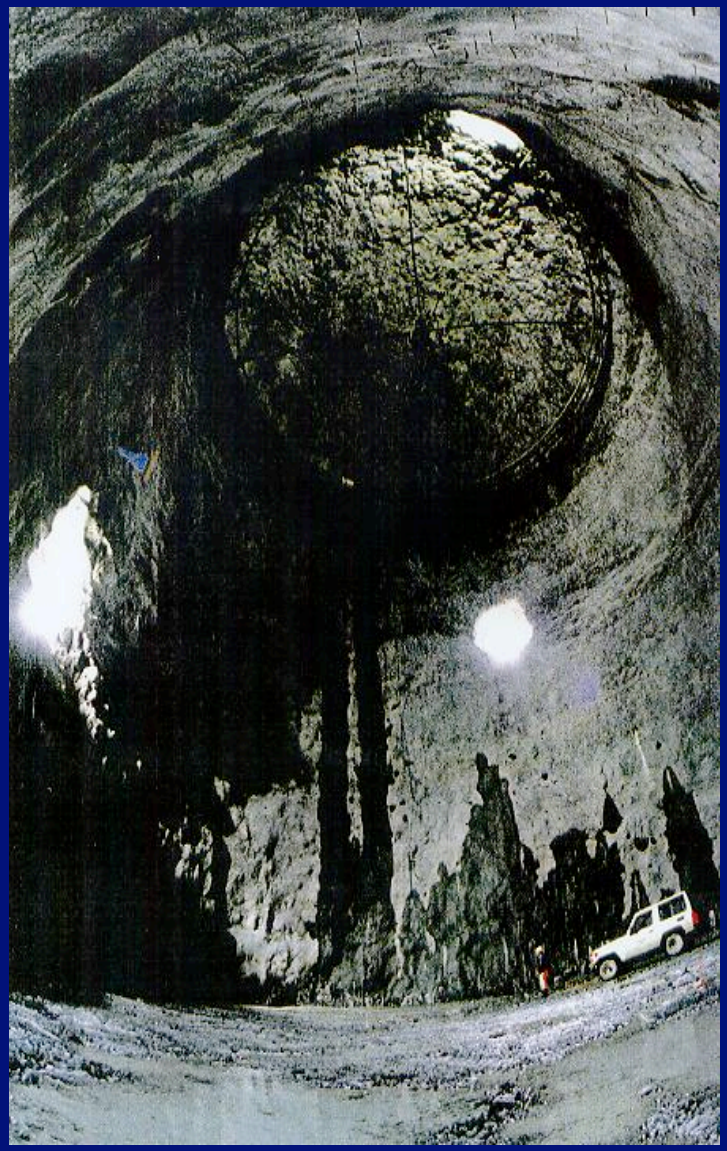

# Super-KAMIOKANDE Dome under Excavation

(since Dec. 1991 until Aug. 1994)

| | One Module | Three Modules |
|---|---|---|
| Construction (including 30% contingency) | $29.1M | $66.1M |
| Photomultipliers and Electronics | $62.1M | $186.3M |
| Other | $7.9M | $7.9M |
| Contingency (Other + PM) | $17.5M | $48.6M |
| **TOTAL** | **$116.6M** | **$308.9M** |

# Chamber Excavation

| | One Chamber | Three Chambers |
|---|---|---|
| Labor & benefits | $6.060M | $12.030M |
| Mining Equipment Operation | 1.430M | 4.279M |
| Supplies | 4.961M | 14.685M |
| Precast concrete liner | 3.575M | 10.725M |
| Outside contractor | 0.132M | 0.396M |
| Plastic liner | 0.250M | 0.750M |
| Rock removal | 1.000M | 3.000M |
| Mining Equipment-Purchase | 5.000M | 5.000M |
| Contingency-30% | 6.722M | 15.260M |
| **TOTAL** | **29.130M** | **66.125M** |

# Photomultipliers & Electronics

| | **Cost for one PM** |
|---|---|
| 28 cm dia PM tube | $880 |
| Installation/PM | $165 |
| Electronics/PM | $120 |
| Cable/PM | $77 |
| **Total per photomultiplier tube** | **$1242** |

| | |
|---|---|
| **One 100 kiloton Detector** | **$62.1M** |
| **Three 100 kiloton Detectors** | **186.3M** |

# Other items

| | |
|---|---|
| Development Labor | $3.000M |
| Water Purification System* (for 10 modules) | 4.500M |
| Calibration equipment | 0.400M |
| **TOTAL** | **$7.900M** |

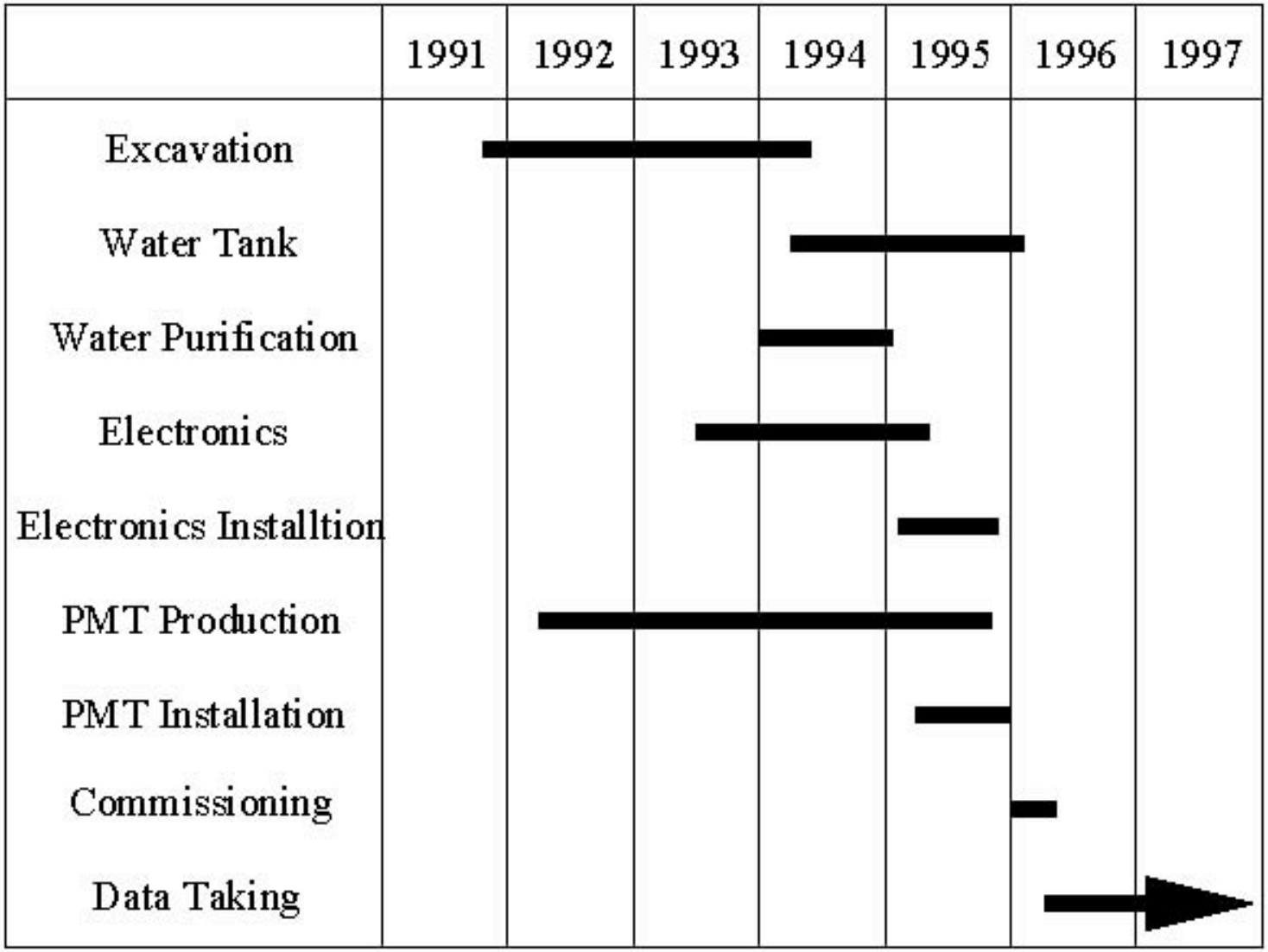


Fig. 3. Super-Kamiokande construction schedule.

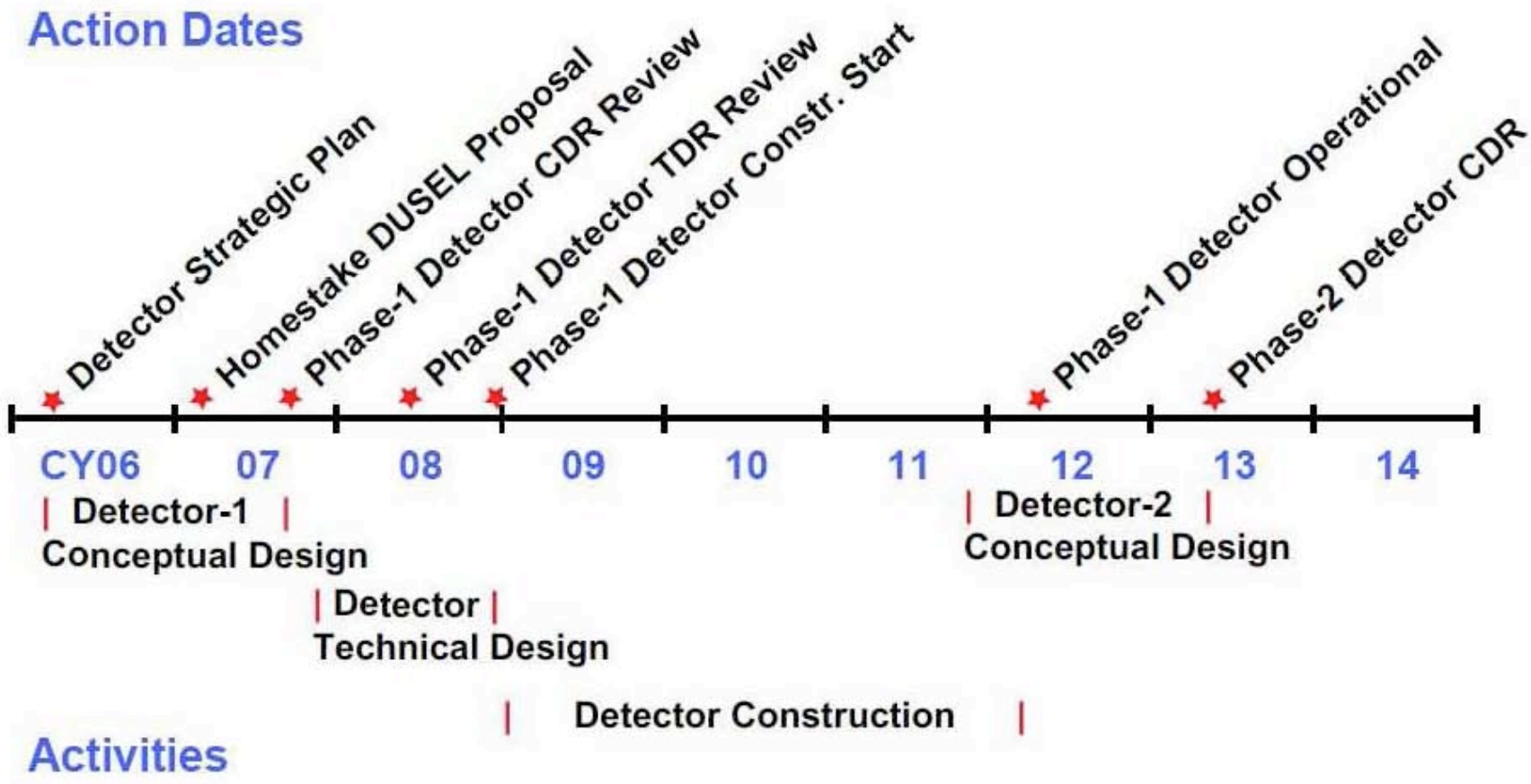
Action Dates
Detector Strategic Plan
Homestake DUSEL Proposal
Phase-1 Detector CDR Review
Phase-1 Detector TDR Review
Phase-1 Detector Constr. Start
Phase-1 Detector Operational
Phase-2 Detector CDR
CY06
07
08
09
10
11
12
13
14
Detector-1
Conceptual Design
Detector
Technical Design
Detector Construction
Detector-2
Conceptual Design
Activities

# SUMMARY

- **1) Initial Detector – Three 100 kiloton modules**
- **2) Total cost - $308M.**
- **3) Construction time – 5 years**