Detector

Phase	Mass
1	0.5 Mtons
2	1.0 Mtons

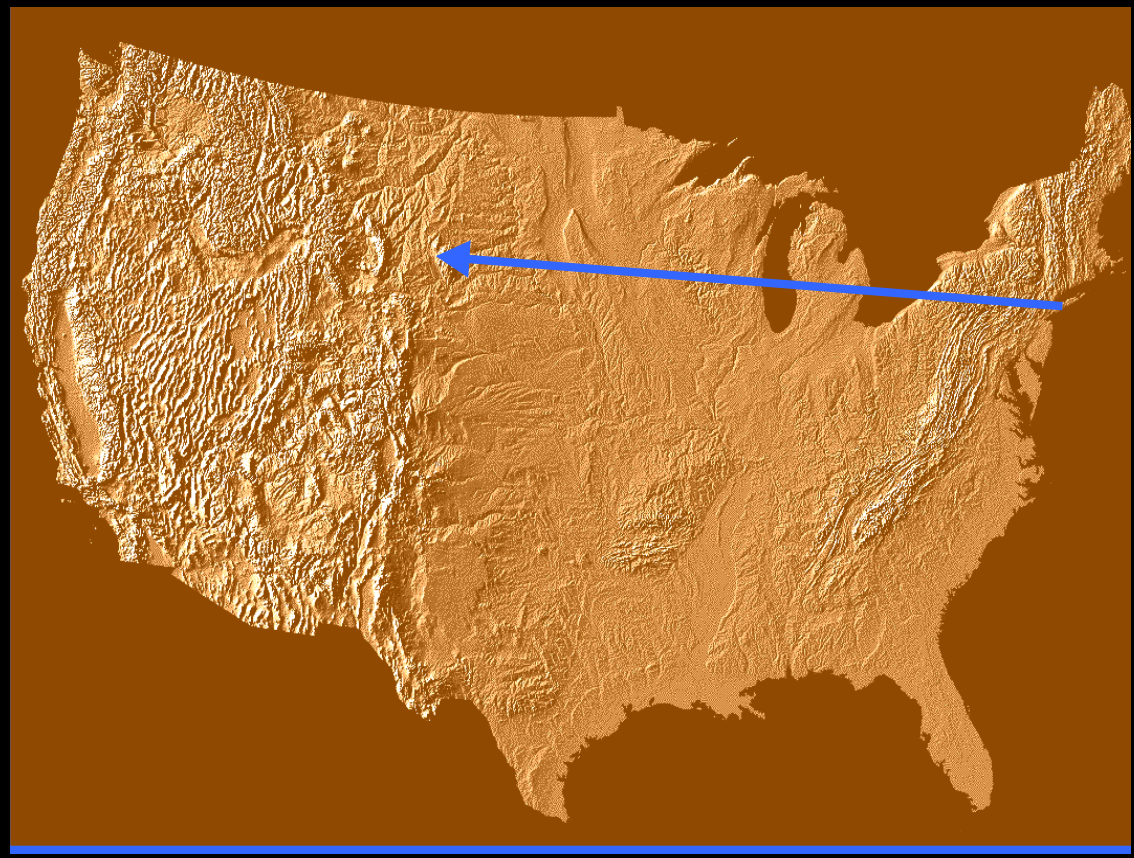

Enhanced AGS

Phase	Power
1	0.47 Mw
2	1.0 Mw

Neutrino Beam from Brookhaven National Laboratory to the National Underground Science Laboratory

Neutrino flight path – 2540 km

Construction of a Megaton Modular Multi-Purpose Detector in the Homestake Underground Laboratory

Excavation Stability

Construction Methodology

Water Tight Liner

Timeline and Estimated Costs

Goal:

Construct a ½ megaton detector in ~ 5 years.

Requirements:

1) Access to great depths
2) Known rock strength parameters
3) Rock disposal plan
4) No environmental or community issues
5) Safety – construction and utilization



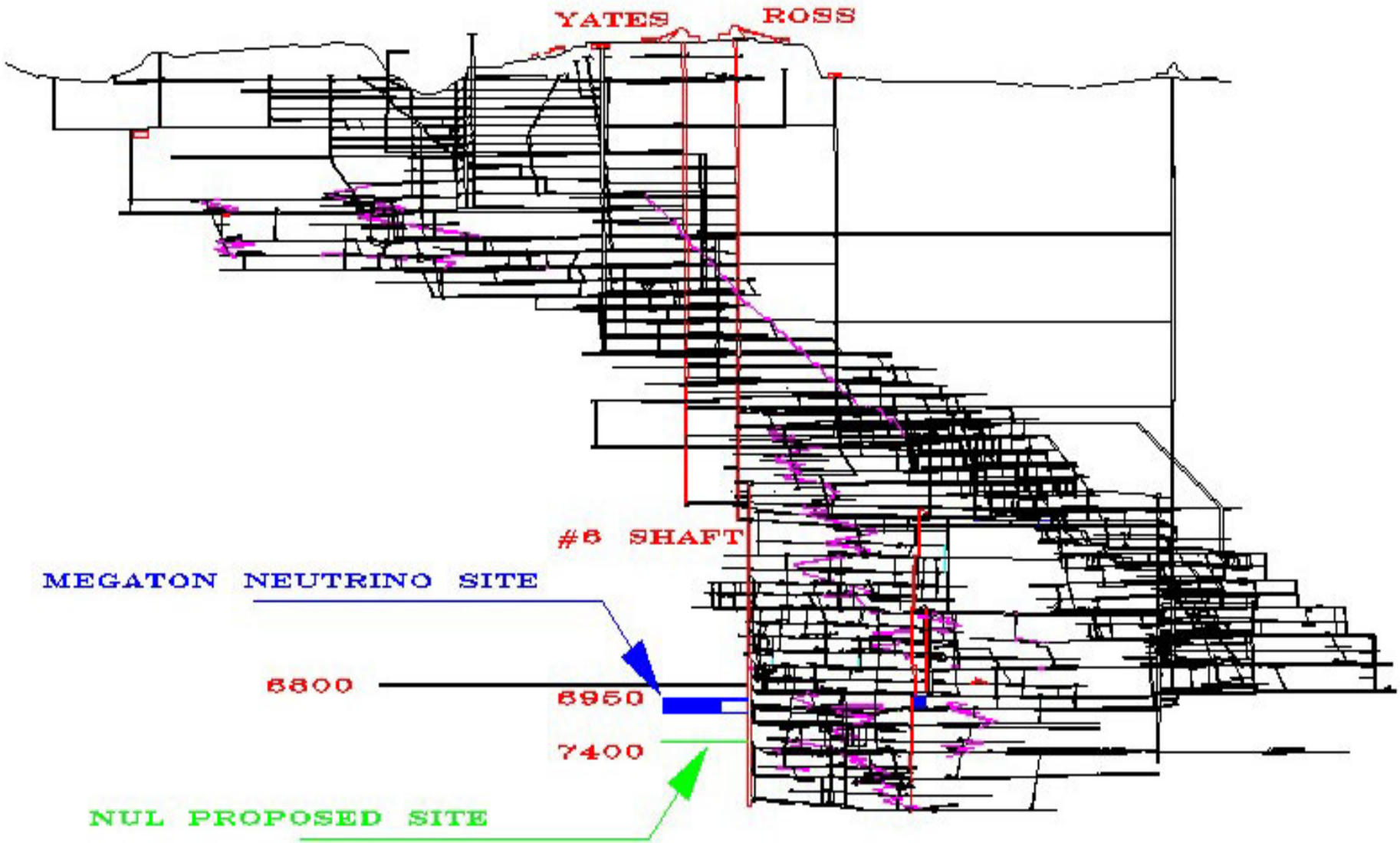
YATES
ROSS
#6 SHAFT
MEGATON NEUTRINO SITE
6800
6950
7400
NUL PROPOSED SITE

References:

1) Rock Stability Evaluation – "Initial Stability Study of Large Openings for the National Underground Laboratory at the Homestake Mine – D. Tesarik, J. Johnson, K. Zipf and K. Lande – **Proceedings of the 2002 North American Rock Mechanics Symposium**

2) Q Value System – 20 Years Application in NMT Support Selection – N. Barton and E. Grimstad – **Felsbau** 12, 428 (1994)

3) Chamber Design and Construction – Mark Laurenti (Chief Mine Engineer and Underground Superintendent – Homestake Mine)

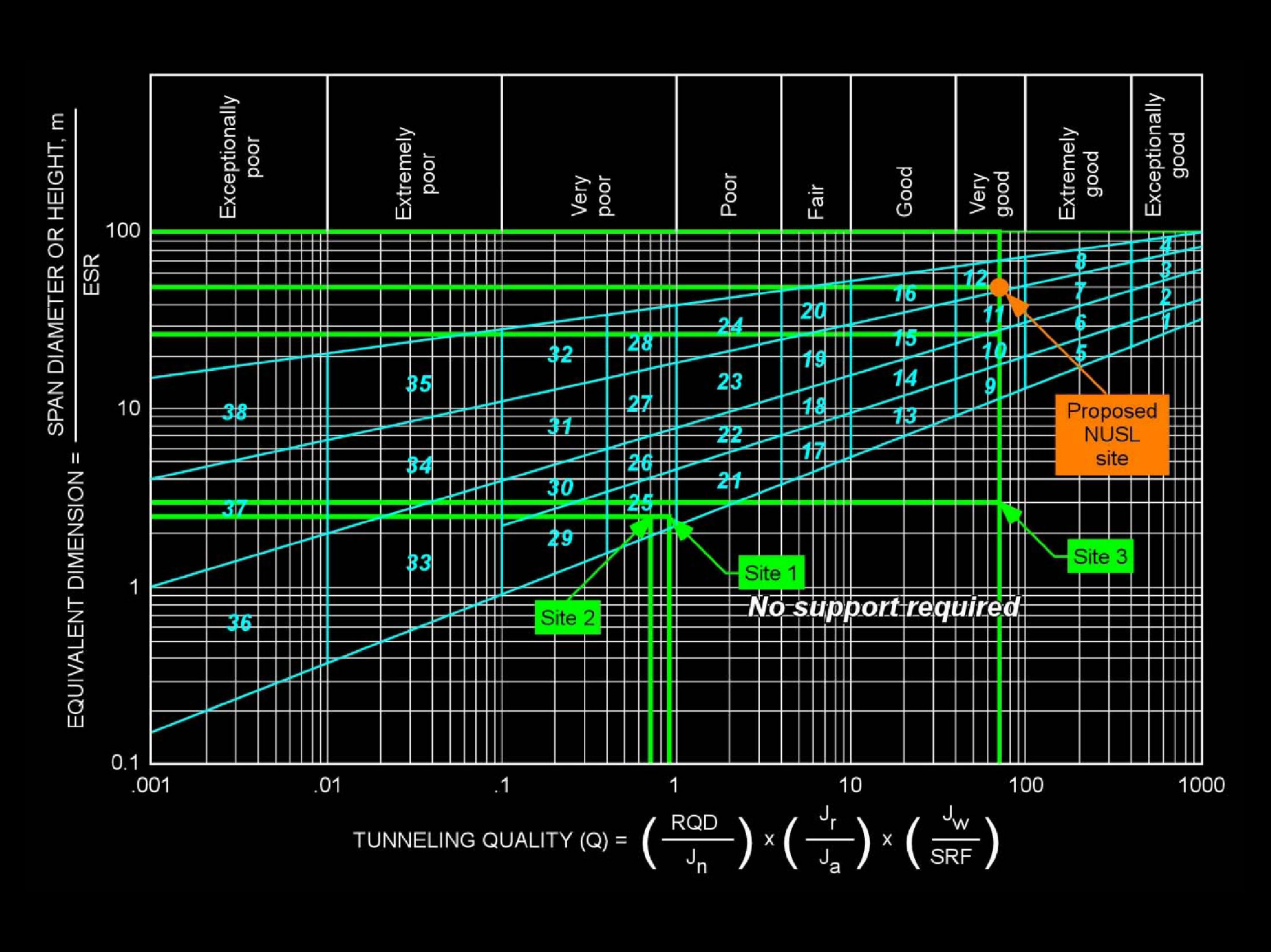
Exceptionally poor
Extremely poor
Very poor
Poor
Fair
Good
Very good
Extremely good
Exceptionally good
EQUIVALENT DIMENSION = SPAN DIAMETER OR HEIGHT, m / ESR
100
10
1
0.1
.001
.01
.1
1
10
100
1000
TUNNELING QUALITY (Q) = (RQD / Jn) x (Jr / Ja) x (Jw / SRF)
Proposed NUSL site
Site 1
Site 2
Site 3
No support required

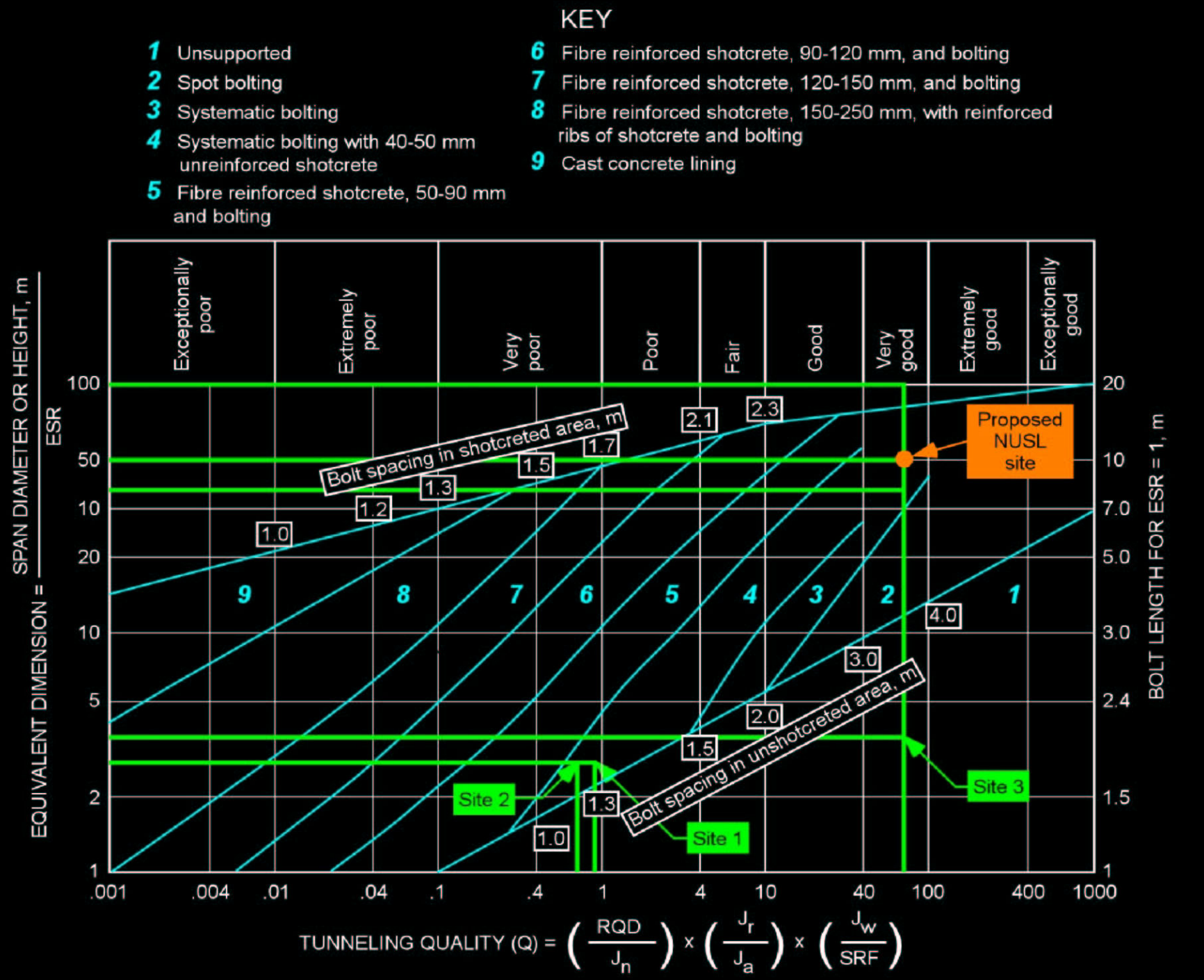
KEY
1 Unsupported
2 Spot bolting
3 Systematic bolting
4 Systematic bolting with 40-50 mm unreinforced shotcrete
5 Fibre reinforced shotcrete, 50-90 mm and bolting
6 Fibre reinforced shotcrete, 90-120 mm, and bolting
7 Fibre reinforced shotcrete, 120-150 mm, and bolting
8 Fibre reinforced shotcrete, 150-250 mm, with reinforced ribs of shotcrete and bolting
9 Cast concrete lining
Exceptionally poor
Extremely poor
Very poor
Poor
Fair
Good
Very good
Extremely good
Exceptionally good
EQUIVALENT DIMENSION = SPAN DIAMETER OR HEIGHT, m / ESR
BOLT LENGTH FOR ESR = 1, m
Bolt spacing in shotcreted area, m
Bolt spacing in unshotcreted area, m
Proposed NUSL site
Site 1
Site 2
Site 3
TUNNELING QUALITY (Q) = (RQD/Jn) x (Jr/Ja) x (Jw/SRF)

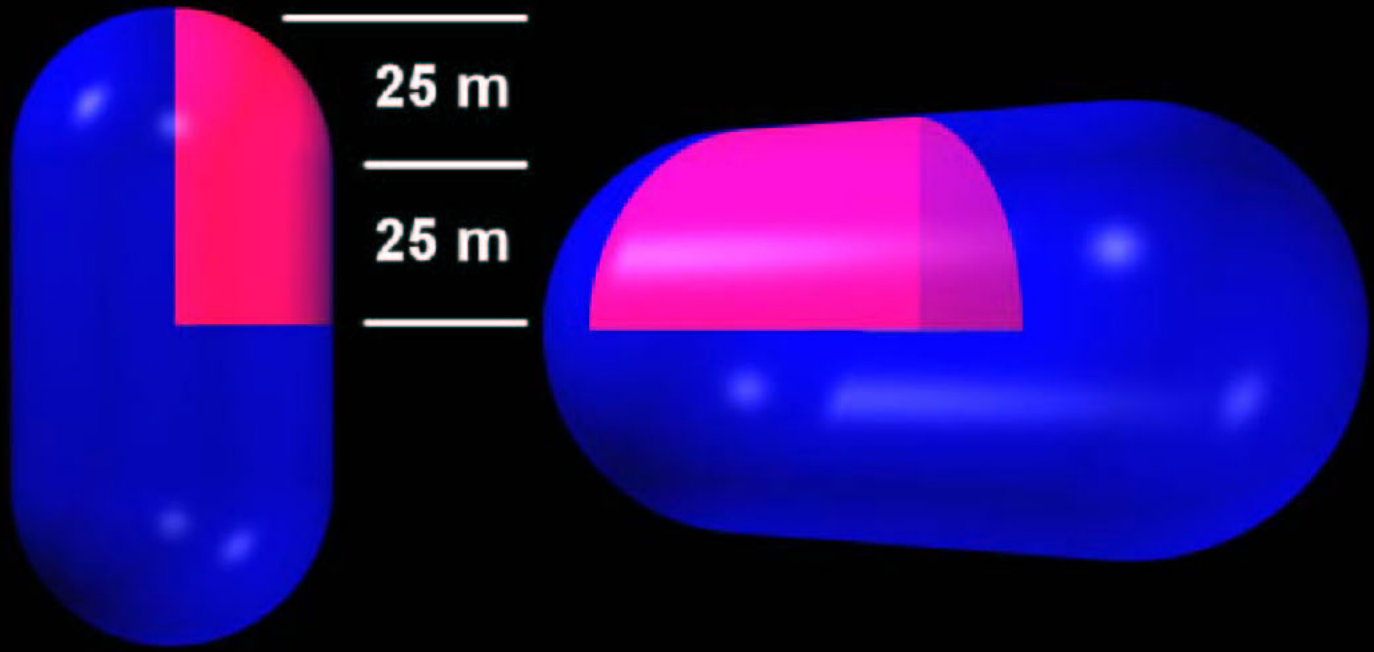
25 m
25 m

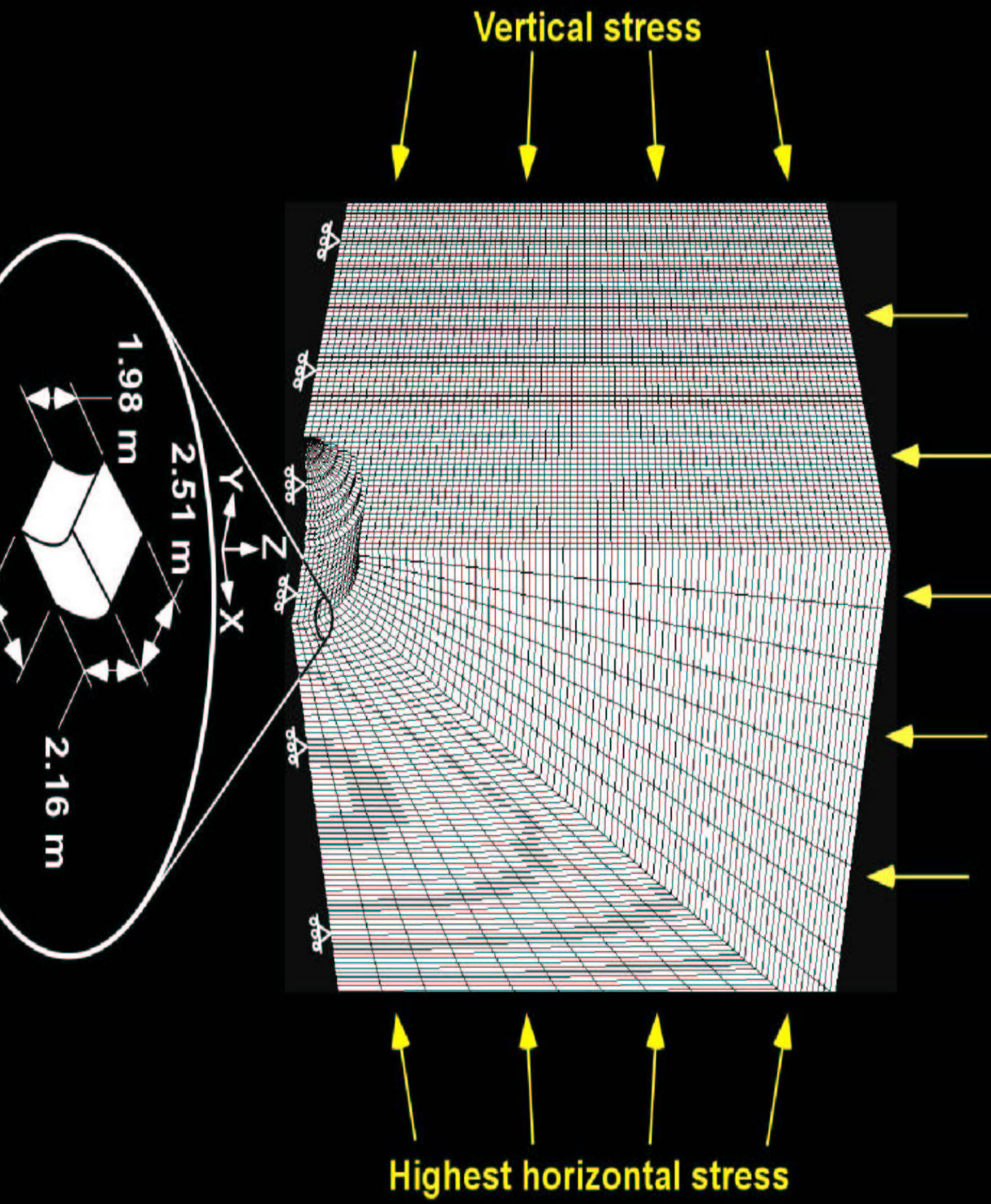
Vertical stress
1.98 m
2.51 m
2.16 m
Y
Z
X
Highest horizontal stress

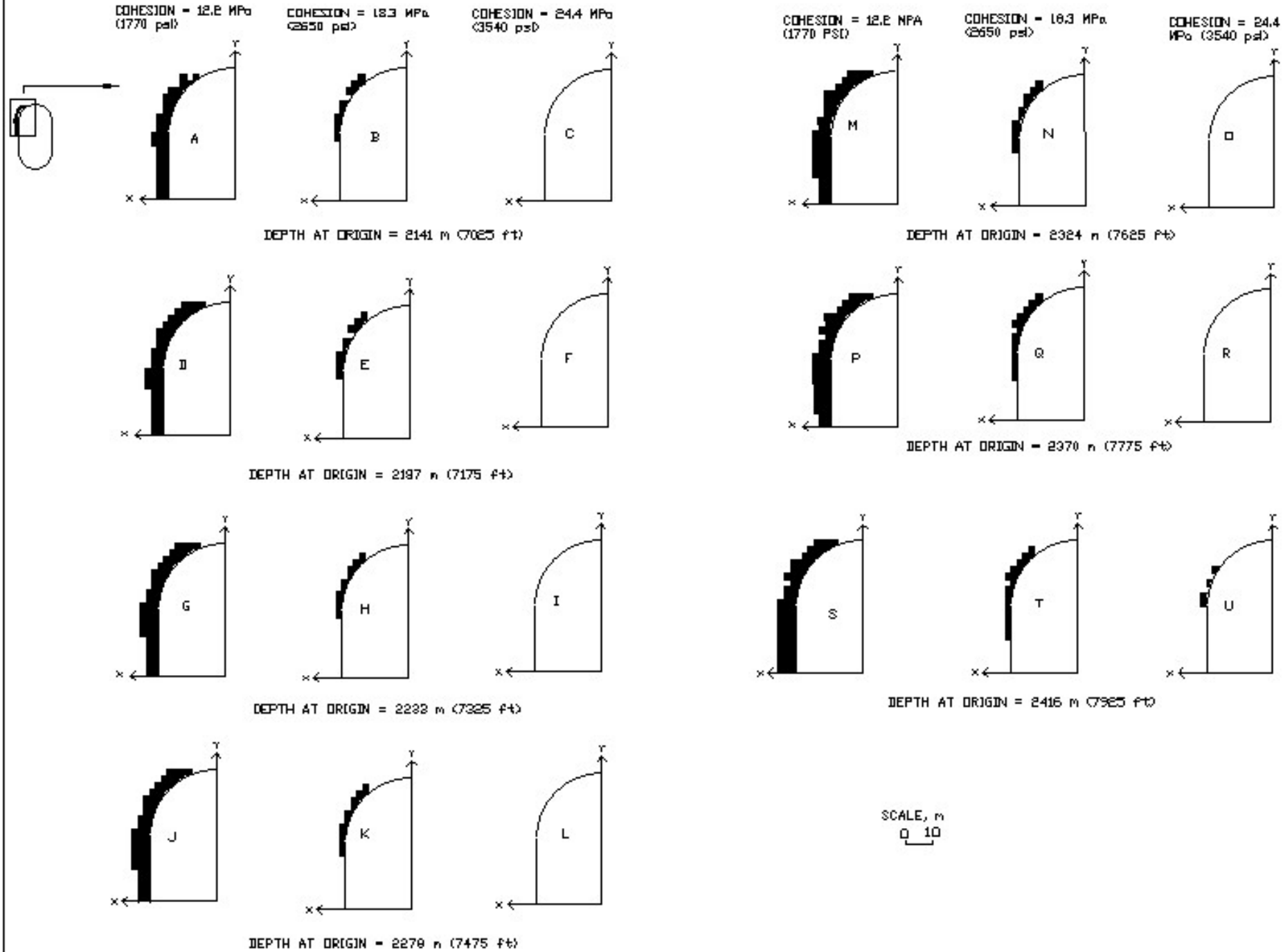
COHESION = 12.8 MPa (1770 psi)
COHESION = 18.3 MPa (2650 psi)
COHESION = 24.4 MPa (3540 psi)
A
B
C
DEPTH AT ORIGIN = 2141 m (7025 ft)
COHESION = 12.8 MPA (1770 PSI)
COHESION = 18.3 MPa (2650 psi)
COHESION = 24.4 MPa (3540 psi)
M
N
O
DEPTH AT ORIGIN = 2324 m (7625 ft)
D
E
F
DEPTH AT ORIGIN = 2197 m (7175 ft)
P
Q
R
DEPTH AT ORIGIN = 2370 m (7775 ft)
G
H
I
DEPTH AT ORIGIN = 2232 m (7325 ft)
S
T
U
DEPTH AT ORIGIN = 2416 m (7925 ft)
J
K
L
DEPTH AT ORIGIN = 2279 m (7475 ft)
SCALE, m
0 10

MEGATON MODULAR MULTI-PURPOSE DETECTOR

✓ Modular Configuration

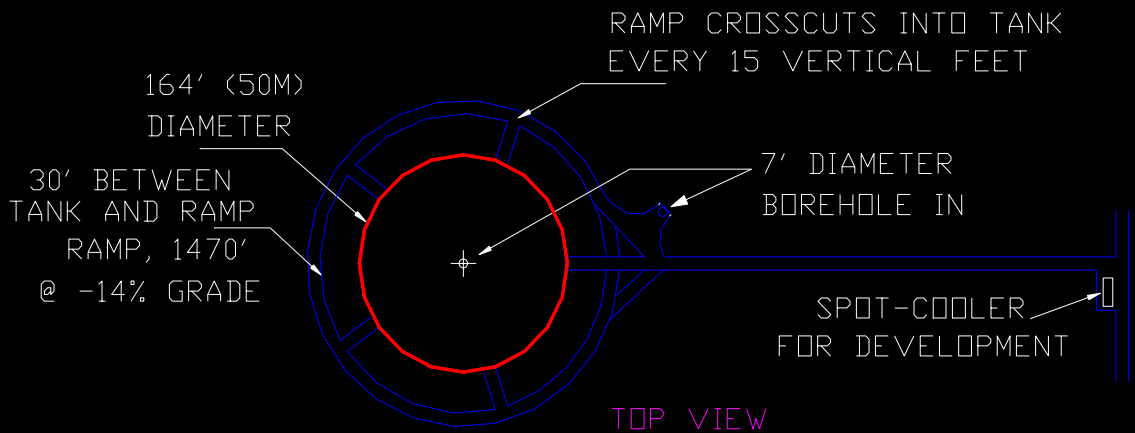

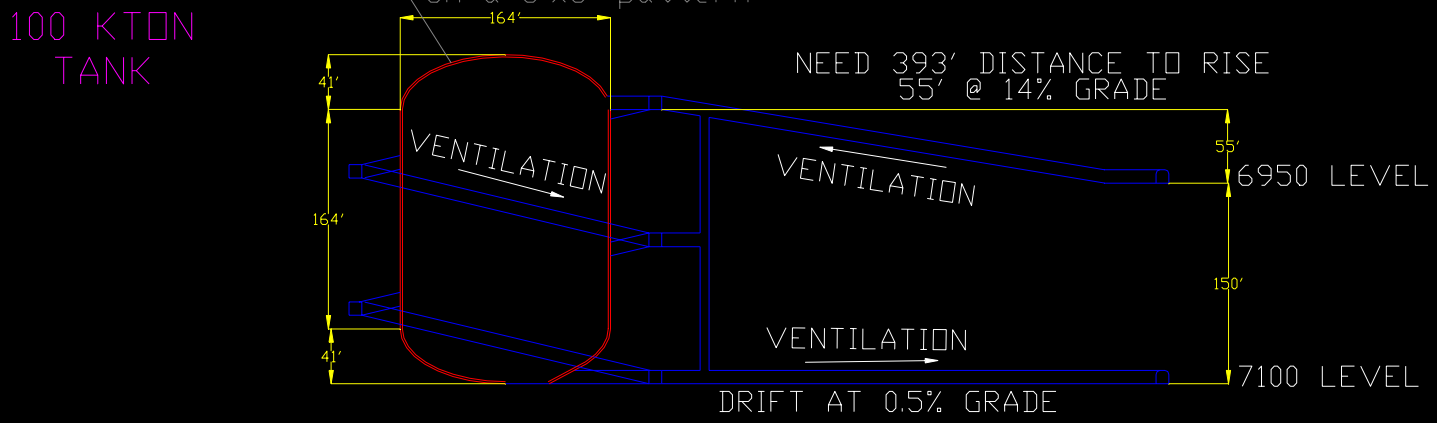

Features of the Design:

1) Module dimensions 50 m diameter x 50 m high
- 100 kilotons water

2) Parallel construction of modules – one "crew" can build 3 modules in parallel- completion in 4-5 years

3) Multiple crews can work at same time – , 2 crews can build 600 kilotons of detector in 4-5 years.

4) Concrete liner in each module provides strength and stability, smooth surface for water tight plastic inner liner, surface for photomultiplier installation guides.

5) Low construction cost

Megaton Modular Multi-Purpose Detector

✓ Estimated Timeline

Year One

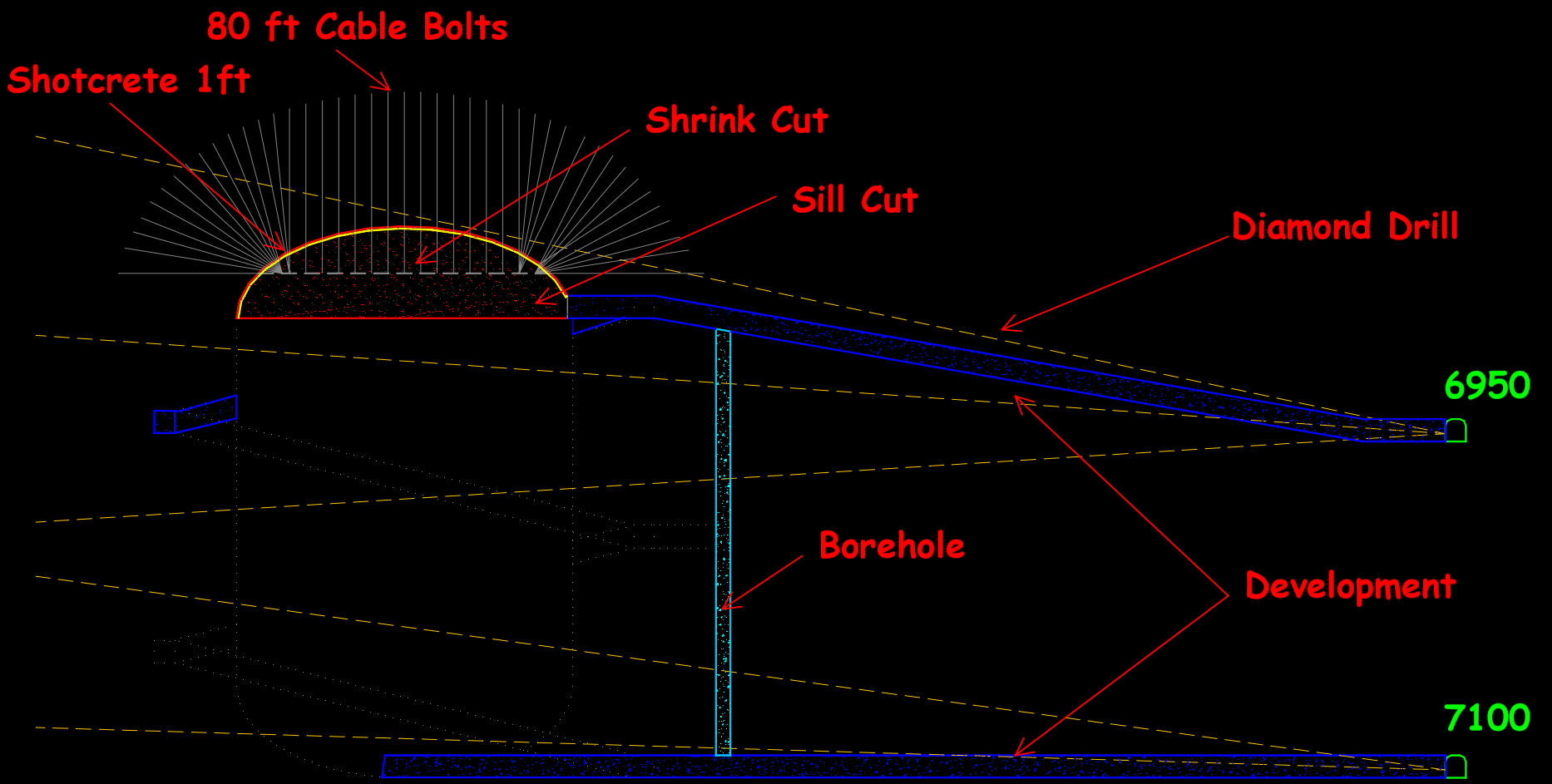

Megaton Modular Multi-Purpose Detector

✓ Estimated Timeline

Year Two

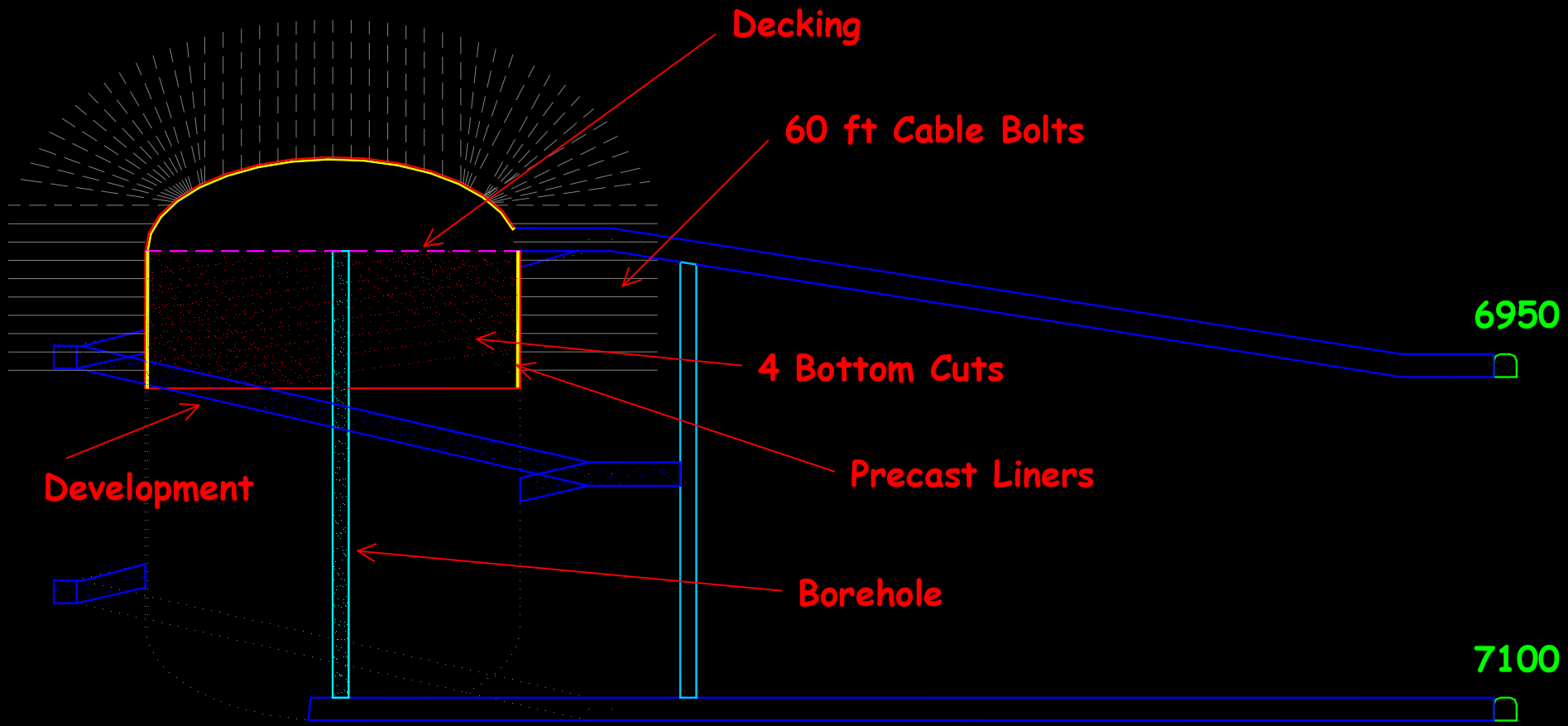

✓ Construction Methodology

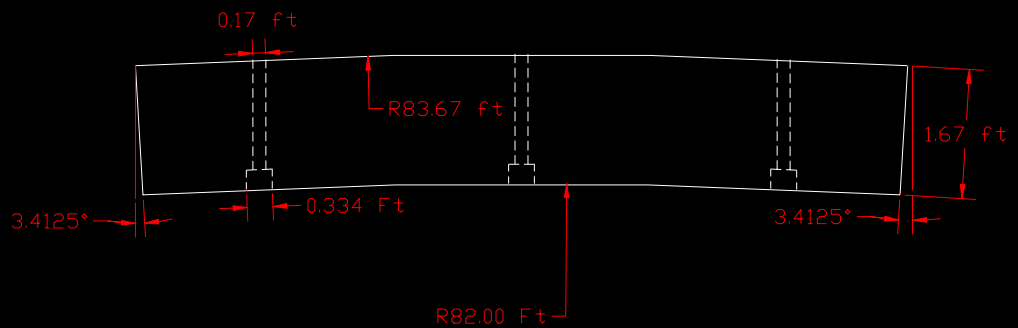

Precast Concrete Liner

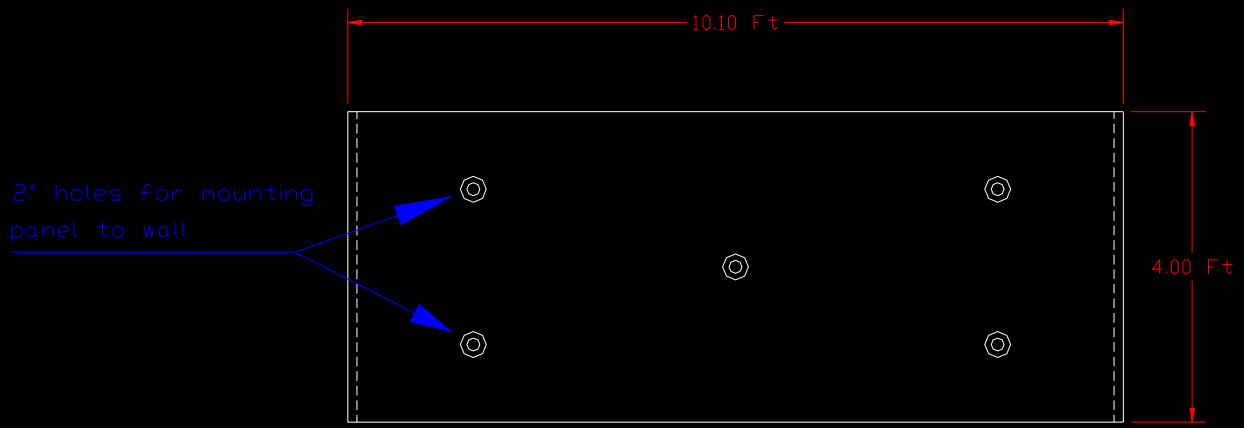

10' x 4' x 1.667' = 66.68 cuft
66.68cuft x 150lbs/cuft = 10,002 lbs

Megaton Modular Multi-Purpose Detector

✓ Modular Configuration

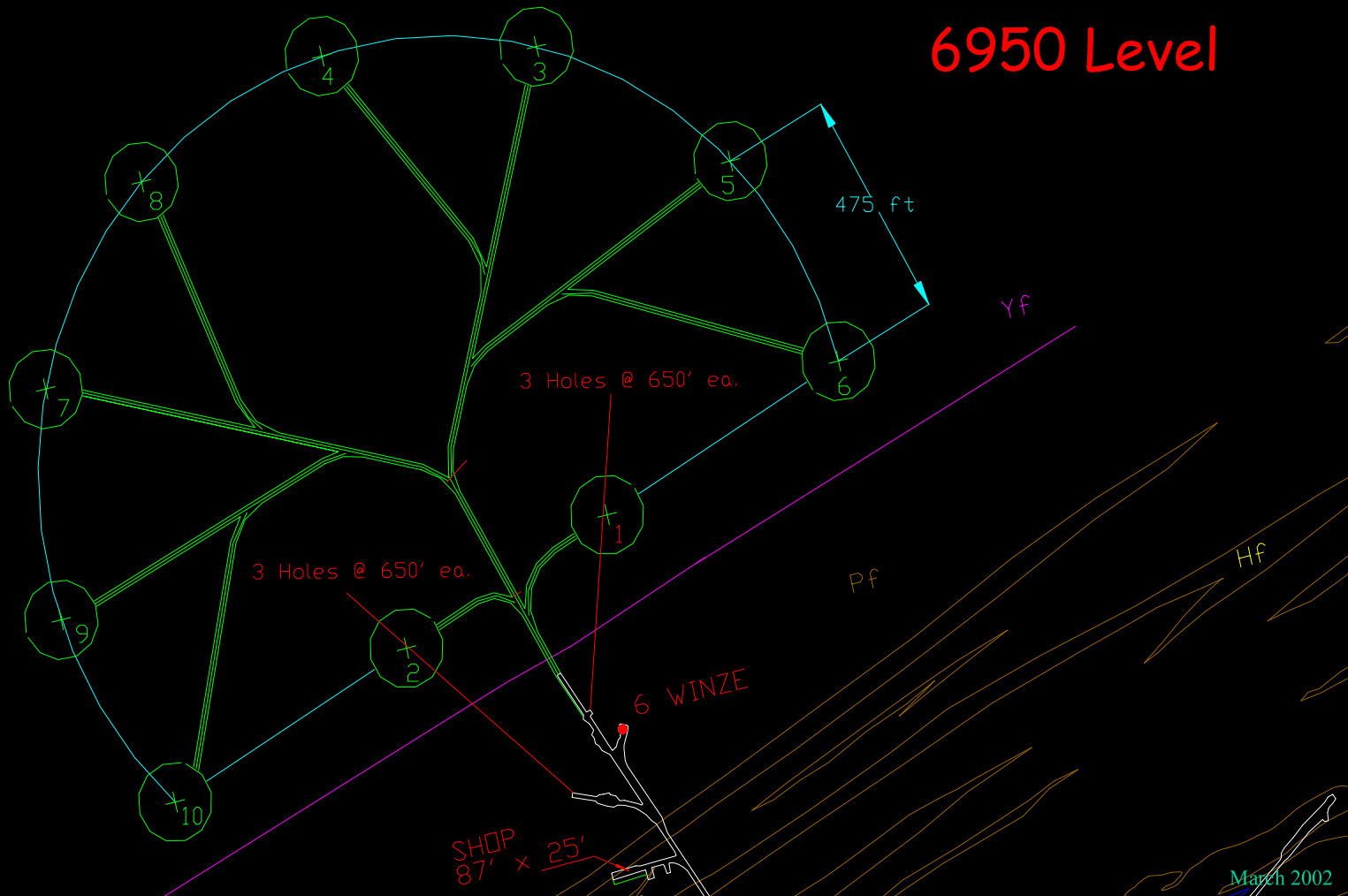

Megaton Modular Multi-Purpose Detector

✓ Estimated Timeline

Year Three

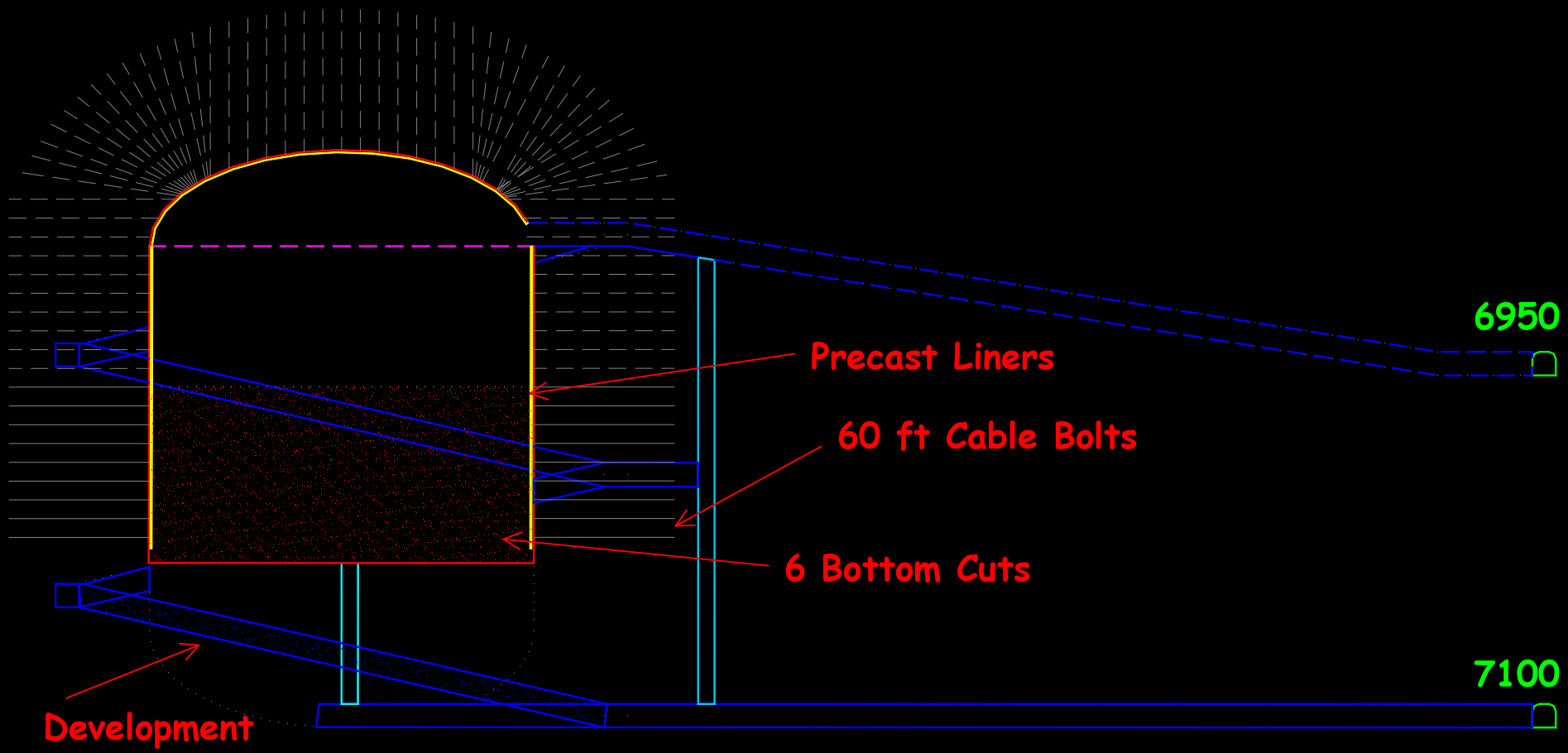

Megaton Modular Multi-Purpose Detector

✓ Estimated Timeline

Year Four

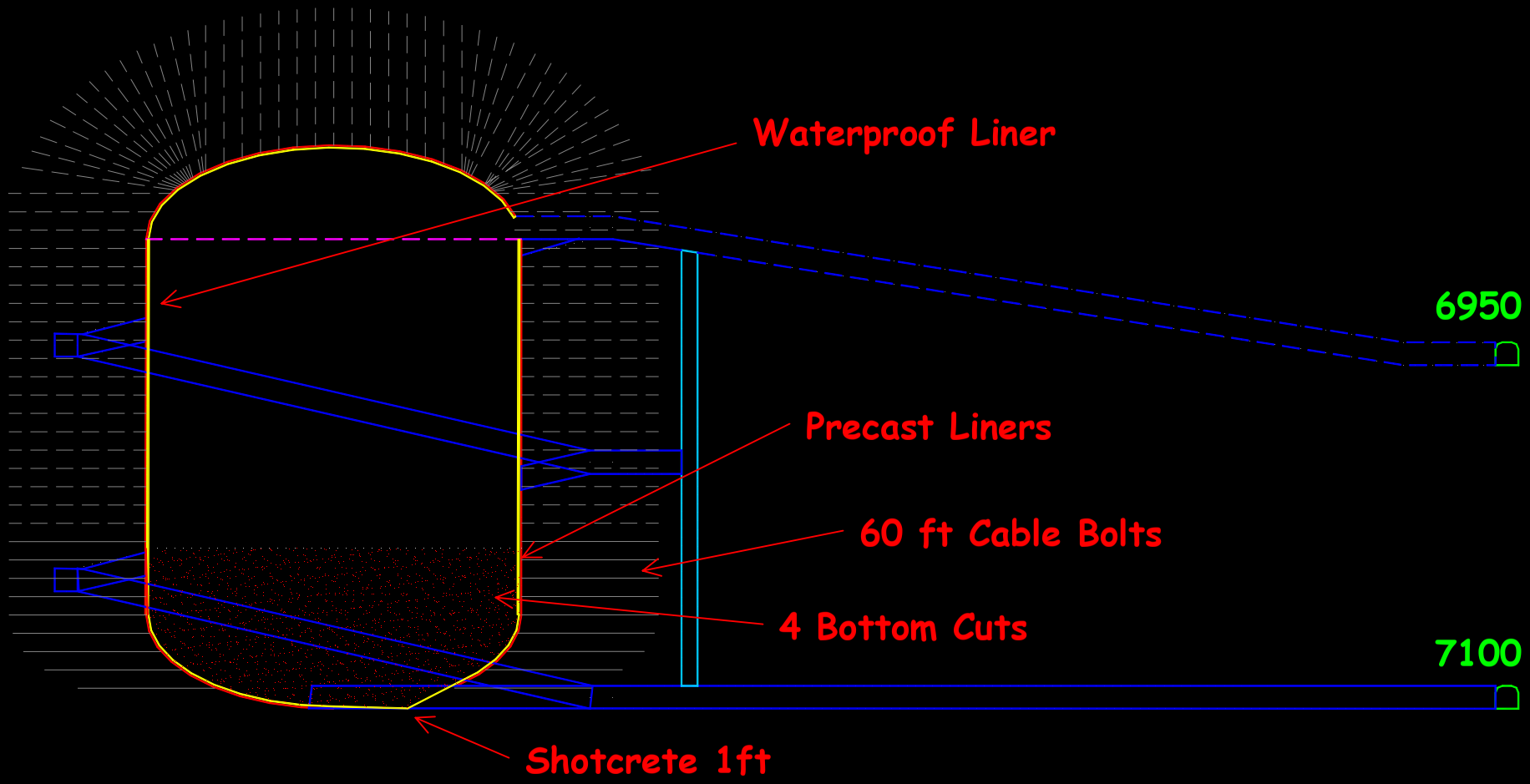

Water Containment:

double plastic liner – a geotextile layer against the concrete liner followed by a fused polyethylene liner (standard technology)

Photomultiplier Installation:

Side pms slide down along vertical guides- can be installed or removed without draining water, easy to vary pm density, guides provide “cushioned” mount in case of intense shock waves in water.

Top pms mounted under top platform– direct access

Bottom pms mounted on neutral buoyancy frame that can be raised to the top platform for access.

Megaton Modular Multi-Purpose Detector

✓ Estimated Timeline

Total time for excavation and construction

208 Weeks

or

4 Years

Megaton Modular Multi-Purpose Detector

✓ Estimated Excavation Costs ($MM)

# Of Chambers	1	3
⇨ Labor & Benefits	$ 5.51	$ 10.94
⇨ Mining & Construction		
★ Equipment Operation	$ 1.30	$ 3.89
★ Supplies	$ 4.51	$ 13.35
★ Precast Concrete Liner	$ 3.25	$ 9.75
⇨ Other (Outside Contractor)	$ 0.12	$ 0.37
⇨ 15% Contingency	$ 2.20	$ 5.74
TOTAL	$ 16.89	$ 44.04

Megaton Modular Multi-Purpose Detector

General Parameters Used for Schedule & Cost

- ☆ Work Schedule
  - 3 Shifts / Day x 5 Day / Week
- ☆ Manpower -3 Supervisors
  - 24 Hourly Employees For One Chamber
  - 41 Hourly Employees For Three Simultaneous Chambers
- ☆ Hoisting Capacity For Mined Material Is 750,000 Tons / Year To The Surface From The 8000 Level
- ☆ A System Is In Place On The Surface For Handling The Mined Material Hoisted To The Surface
- ☆ Equipment For Construction Of 1 or 3 Simultaneous Chambers

4 LHD's	1 Long Hole Drills	2 Support Vehicles
2 Bolters	2 Bench Drills	
2 Face Jumbos	2 Lift Trucks	

Megaton Modular Multi-Purpose Detector

✓ Estimated Costs

⇨ Operating Costs Not Included In Estimate

★ Equipment Purchase or Lease

✓ Cost ~ $5.00MM

✓ 5 Year Life

★ Cost of Waste Handling

★ General Operation of the Mine

★ Engineering, Geology

★ Power and water Consumption

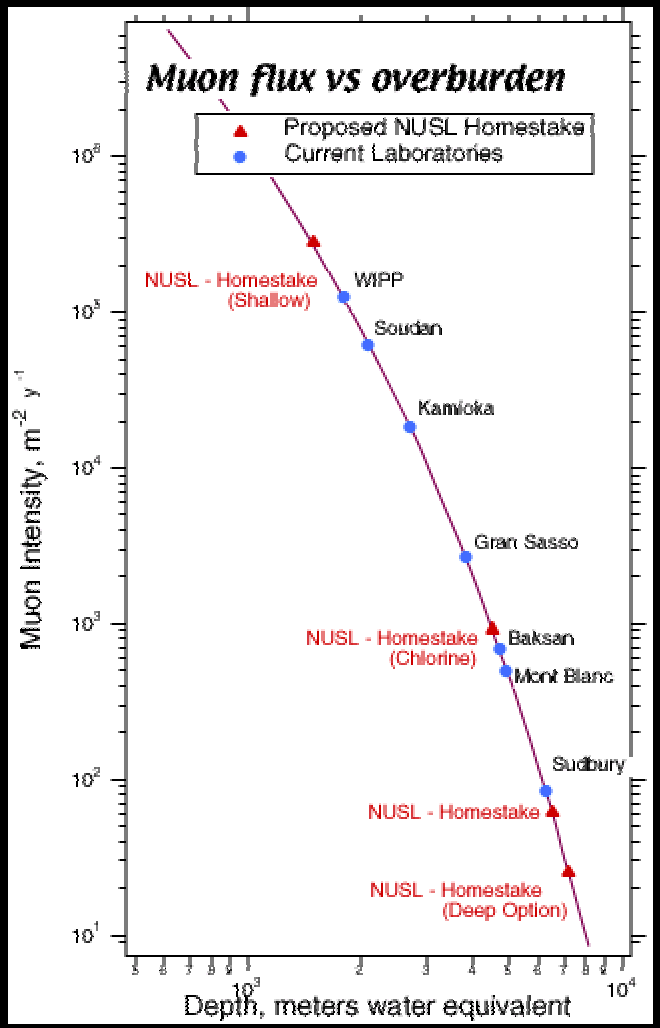

Cosmic ray flux at depth of 3M Detector = 0.2 muons/m^2, day

Each 100 kT module has an area of 2000 m^2 and thus 800 muons/day

Assuming a neutrino pulse width of one microsecond/sec gives **≈ 1 cosmic ray events per year** in the 10 module Megaton detector during the AGS neutrino pulses

Detector Depth:

Greater depth gives lower background - we set a goal of **less than one cosmic ray background event per year** during the time window, ~1μsec/sec, when the neutrino beam from the AGS is on target.

The resultant depth, **6950 ft**, is the same as that of the SNO detector.

Rock stability evaluations based on actual rock samples from the proposed detector location indicate large safety factor for 100 kiloton modules.

Construction cost differential between 4850 ft and 6950 ft is less than 3%.

Megaton Modular Multi-Purpose Detector

✓ Summary

- ⇨ Estimated construction time for one chamber is four years
- ⇨ Estimated construction time for three chambers is five years
- ⇨ Estimated cost for one chamber is $17.0MM
- ⇨ Estimated cost for three chambers is $44.0MM