Antineutrino Detector

Outline

1. Requirements
2. Overall Design
3. Mechanics
4. Liquid Scintillator
5. PMTs
6. Electronics
7. Calibration
8. Performance

Antineutrino Detector Requirements

- Large, homogeneous detectors → sufficient statistics, minimize edge effects
- Clean IBD signature, with good background separation → Gd-loaded LS (8 MeV release and 30μs capture time)
- Well determined fiducial volume/mass and hydrogen density
- Low threshold (<1 MeV) to efficiently detect e^+ at rest → reduce single γ rate, good p.e. yield, L_{attn}, and uniformity
- Well-defined neutron detection efficiency → γ-catcher, calibration of energy scale, identical detectors, simulation
- Good energy resolution → energy scale, spectral distortion (want high scintillation output, long L_{attn}, good photocathode coverage)
- Moderate size → enable swapping, manageable muon flux

Antineutrino Detector Design

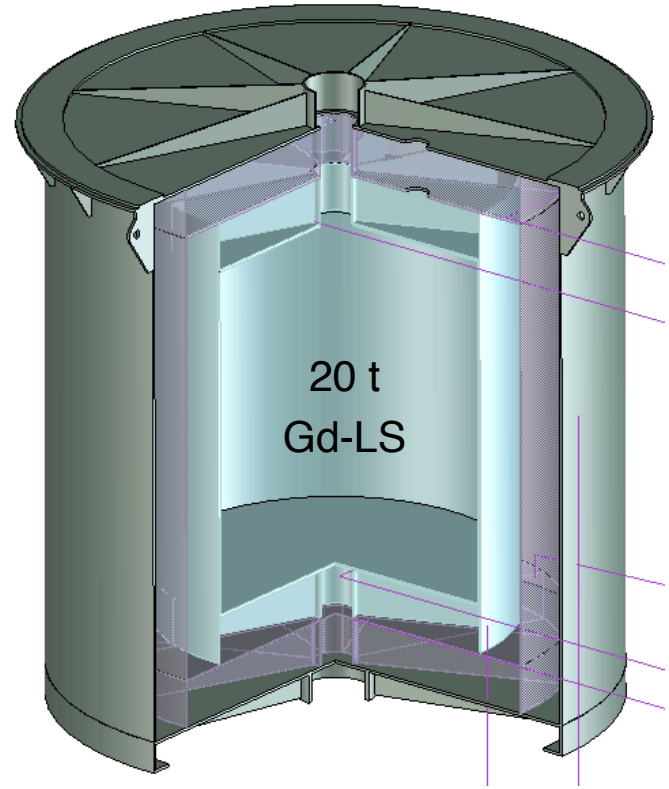

Three-Zone Structure:

I. Target: 0.1% Gd-loaded liquid scintillator
II. γ-catcher: liquid scintillator, 45cm
III. Buffer shielding: mineral oil, ~45cm

Diffuse reflector at ends. For 224 PMT's on circumference:

$$\frac{\sigma}{E} \sim \frac{14\%}{\sqrt{E(\mathrm{MeV})}}, \quad \sigma_{\mathrm{vertex}} = 14\mathrm{cm}$$

Oil buffer thickness

Rate from PMT glass

Isotopes (from PMT)	Purity (ppb)	20cm (Hz)	25cm (Hz)	30cm (Hz)	40cm (Hz)
^{238}U(>1MeV)	40	2.2	1.6	1.1	0.6
^{232}Th(>1MeV)	40	1.0	0.7	0.6	0.3
^{40}K(>1MeV)	25	4.5	3.3	2.3	1.2
Total		7.7	5.6	4.0	2.1

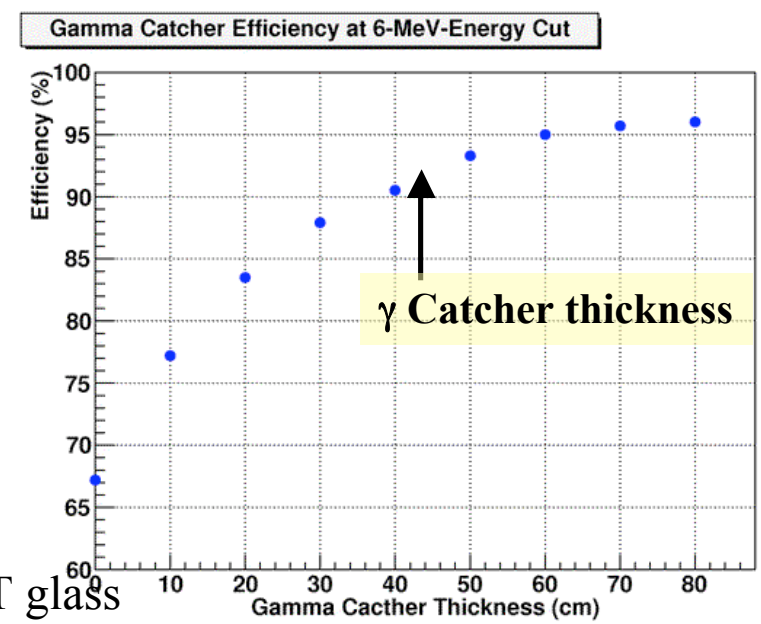

A 45cm buffer provides 20cm of shielding against PMT glass

Antineutrino Target Mass

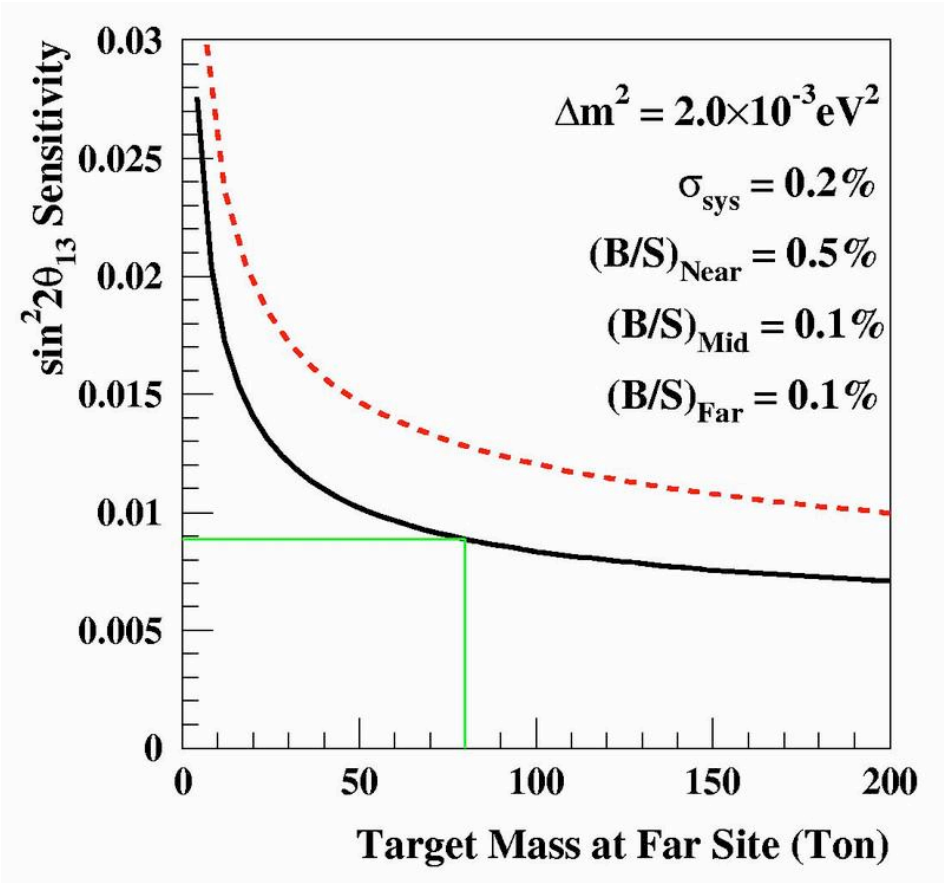

Sensitivity after 3 years.

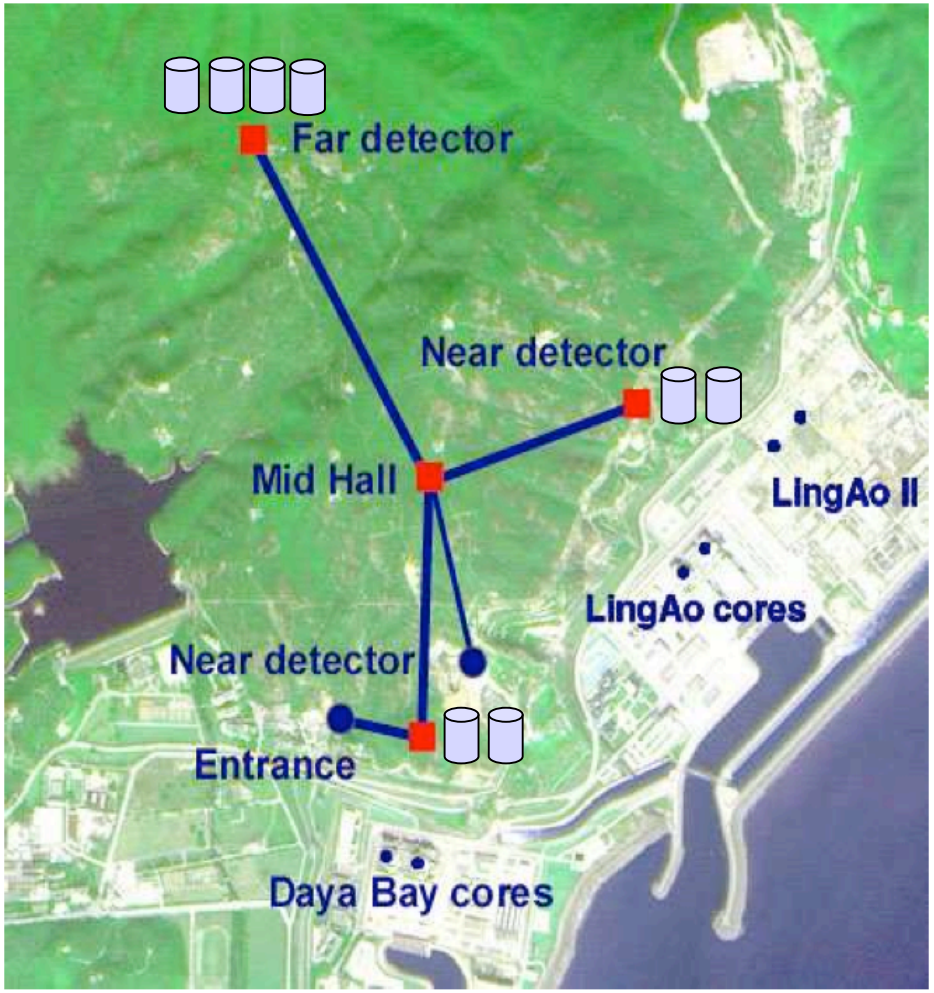

Three zone detector

- 2 zones implies simpler design/construction, some cost reduction but with increased risk to systematic error (neutron ε and E_ν spectrum)
- 3 zones provides increased confidence in systematic error associated with detection efficiency and fiducial volume, but smaller volume

n capture on Gd yields 8 MeV with 3-4 g's

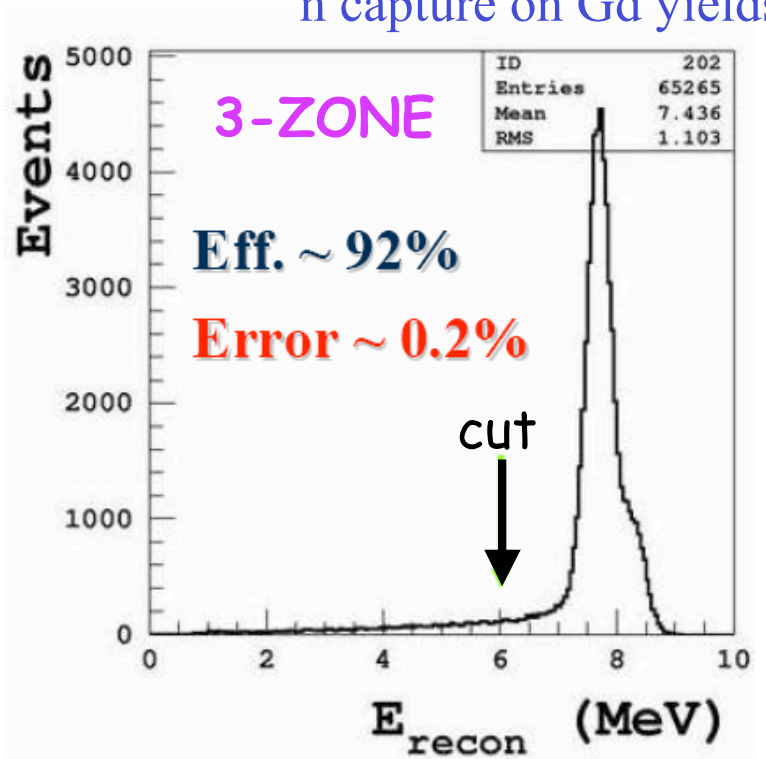

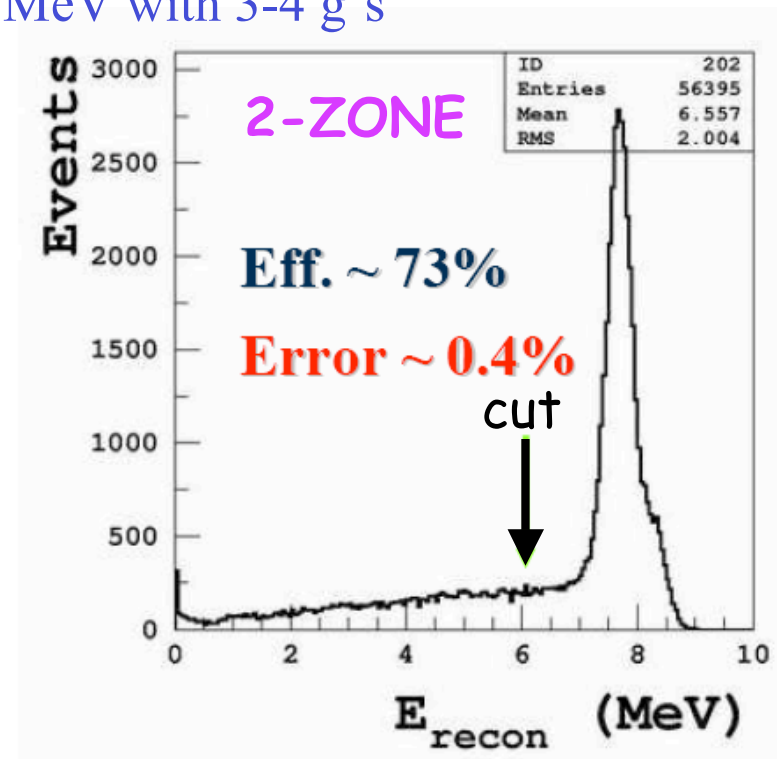

4 MeV cut can reduce the error by x2, but low-energy γ rate does not allow us to do so

Rates

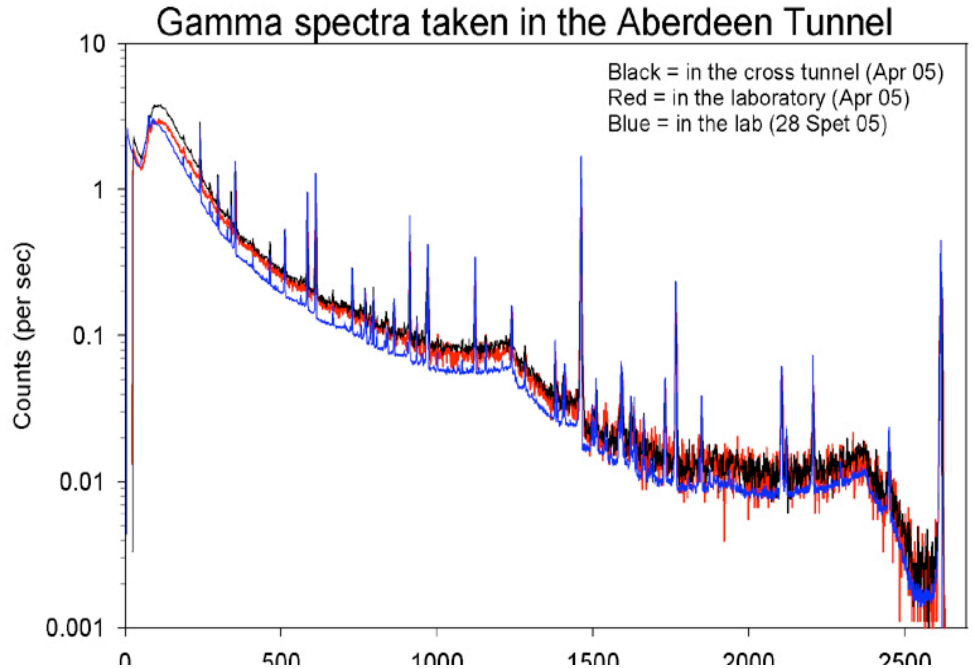
Gamma spectra taken in the Aberdeen Tunnel
Black = in the cross tunnel (Apr 05)
Red = in the laboratory (Apr 05)
Blue = in the lab (28 Spet 05)
Counts (per sec)
10
1
0.1
0.01
0.001
0
500
1000
1500
2000
2500

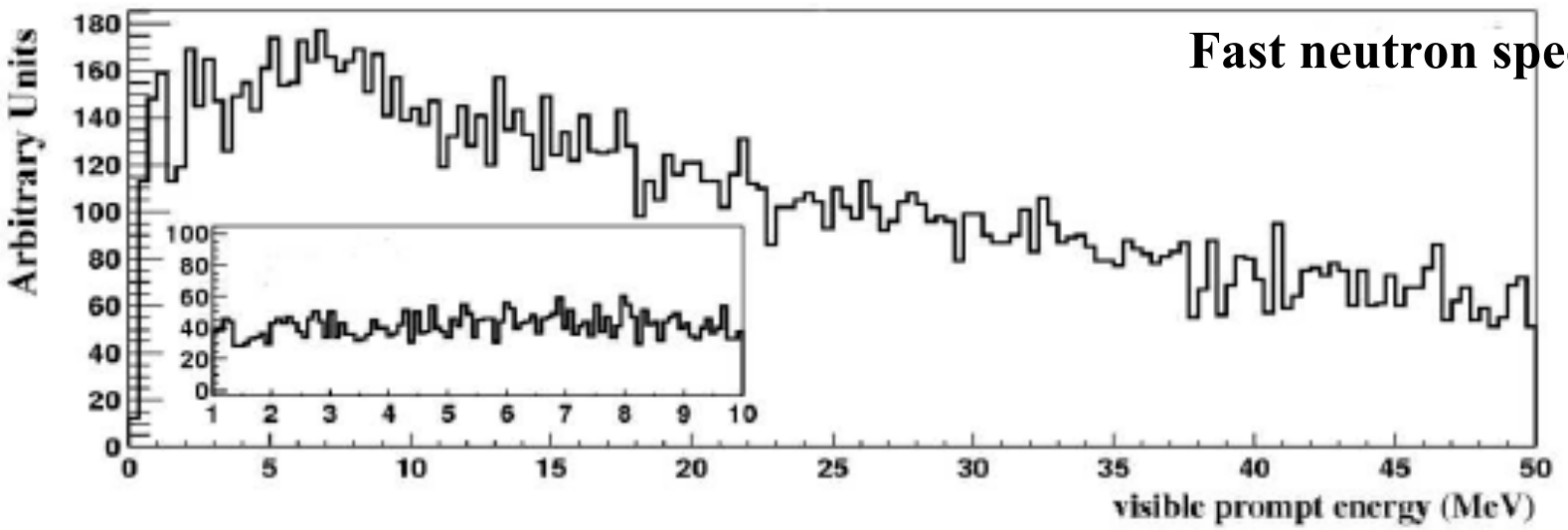
Fast neutron spectrum
Arbitrary Units
visible prompt energy (MeV)

Rates (GEANT)

	DB	LA	far
Neutrino signal rate	930	760	90
Radioactivity (Hz)	35	35	35
Rock (Hz)	**4**	**4**	**4**
PMT glass (Hz)	**8**	**8**	**8**
other materials (Hz)	**18**	**18**	**18**
Gd contamination (Hz)	**1**	**1**	**1**
Muons (Hz)	24	14	1
Tagged fast neutron	20	13	2
β emitters (6-10 MeV)	210	140	15
^{12}B	400	270	28
$^{8}He+^{9}Li$	4	3	0

Rates are per 20 ton module per day, unless otherwise noted

Mechanical Design

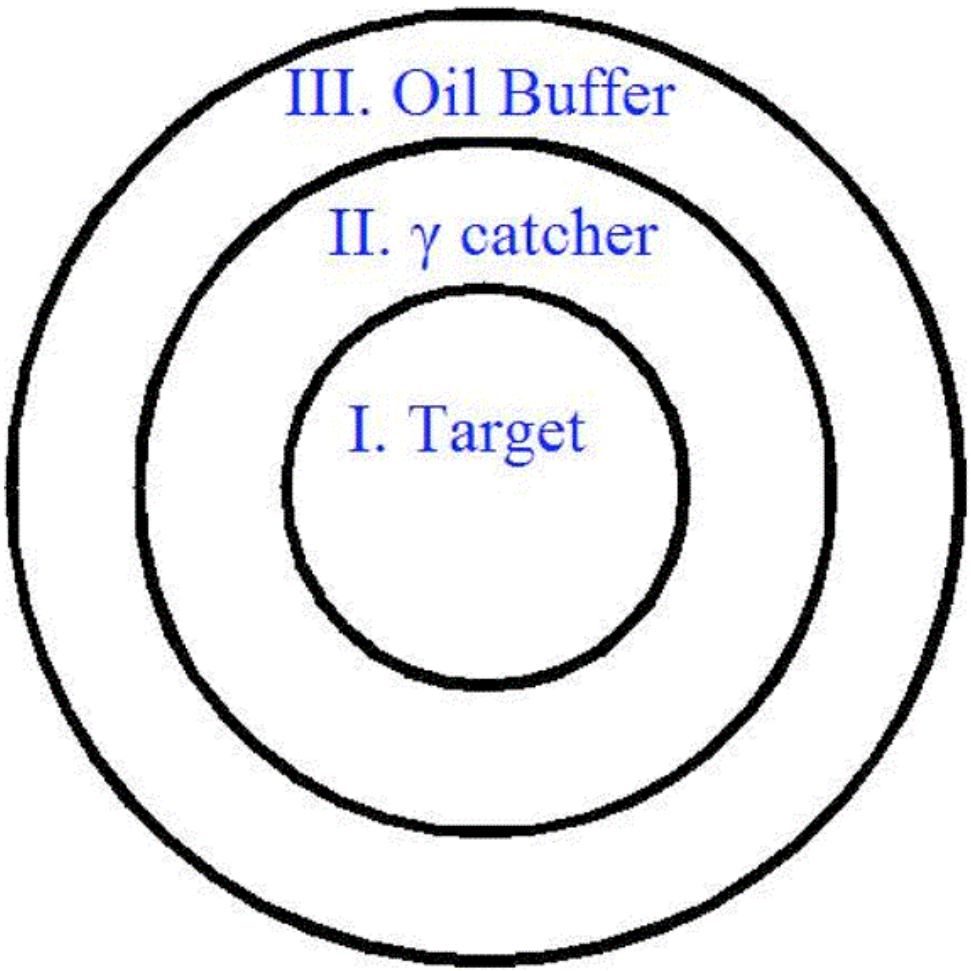

- Gd-LS Target: 3.2m (Φ) x 3.2m (L) – ~20 tons
- LS γ-catcher: 4.1m (Φ) x 4.1m (L) – ~20 tons
- Mineral oil buffer: 5m (Φ) x 5m (L) – ~40 tons

~~Mechanics~~ of the detector

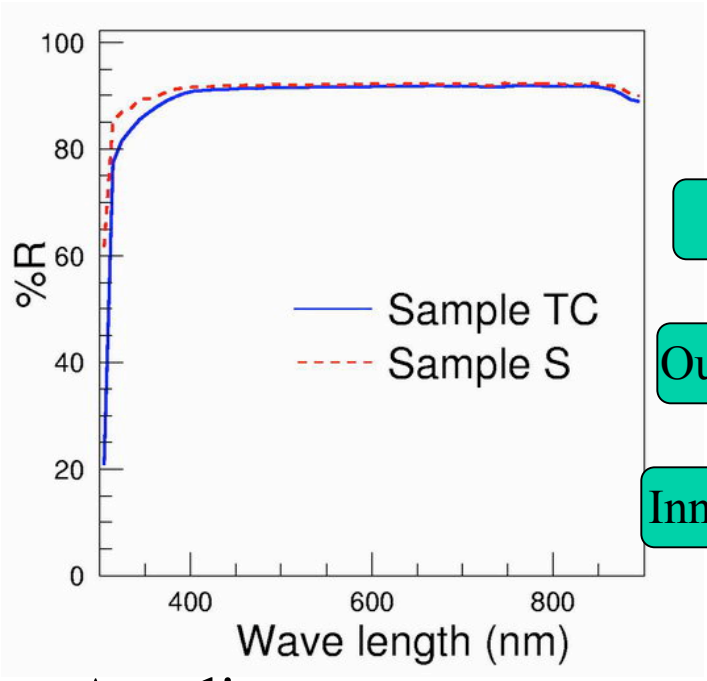

Acrylic transparency

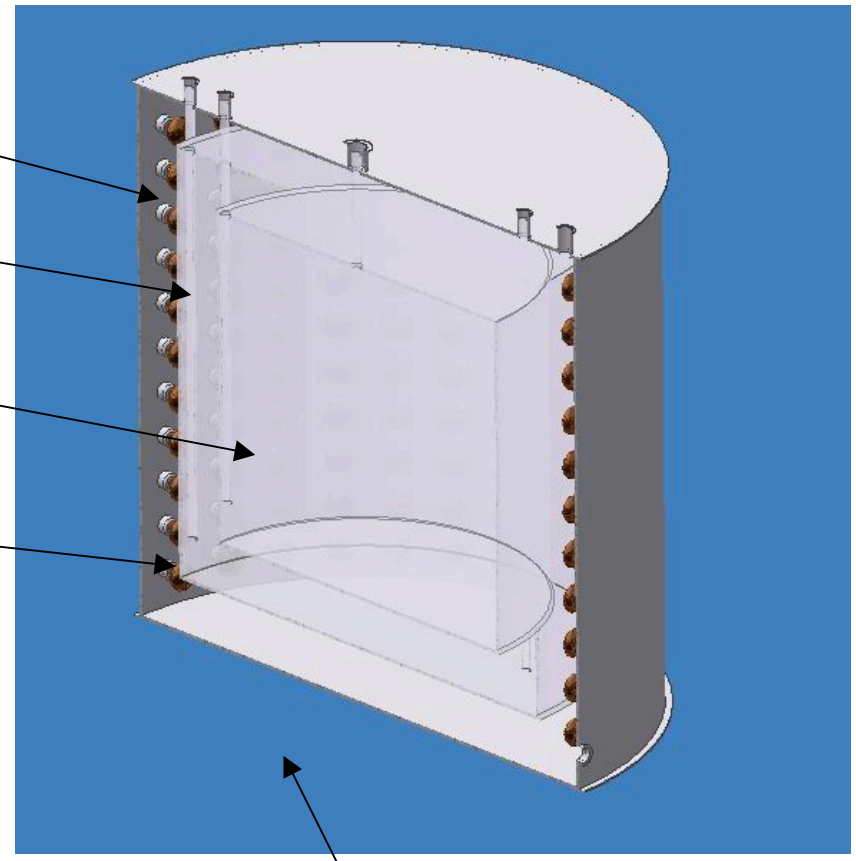

Dimensions	**inner**	**outer**	**steel**
Diameter (mm):	3200	4100	5000
Height (mm):	3200	4100	5000
Wall thickness (mm):	10	15	100
Top/bot. thick (mm):	15	15	
Weight (ton):	0.9	1.4	

Finite Element Analysis for steel tank

Load condition: tank structure filled with liquids
Constraint condition: bottom annular surface was constrained

The max. stress: 108 MPa
The max. deformation: 2.8 mm

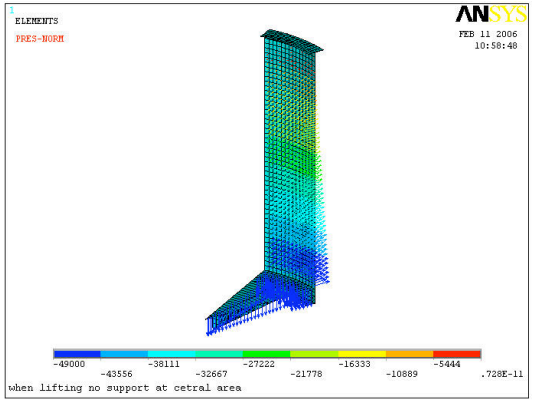

Stress result Unit:Pa

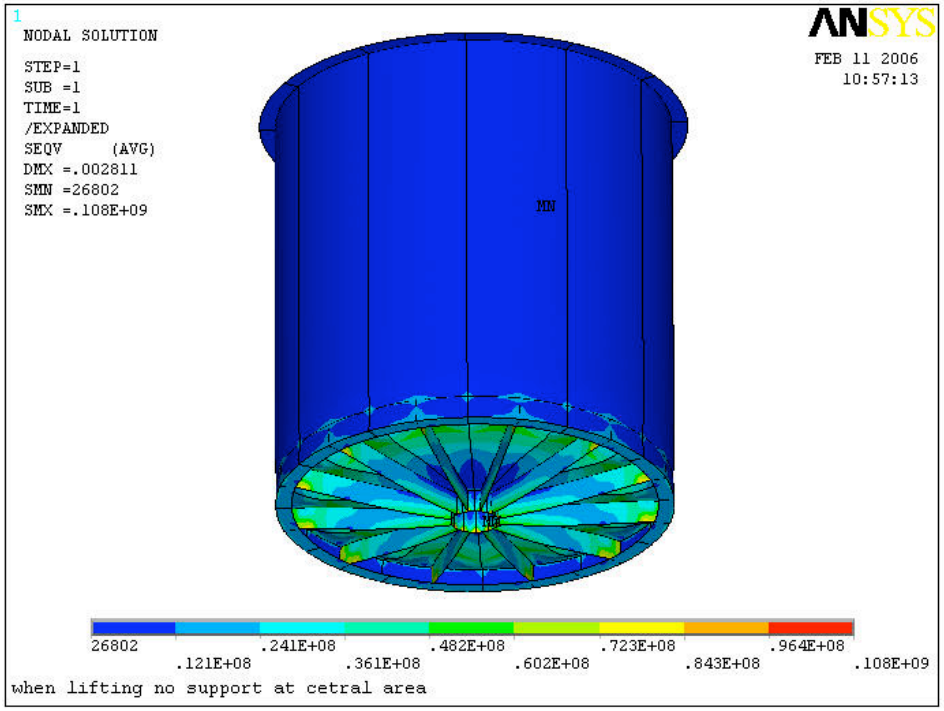

Deformation result Unit:m

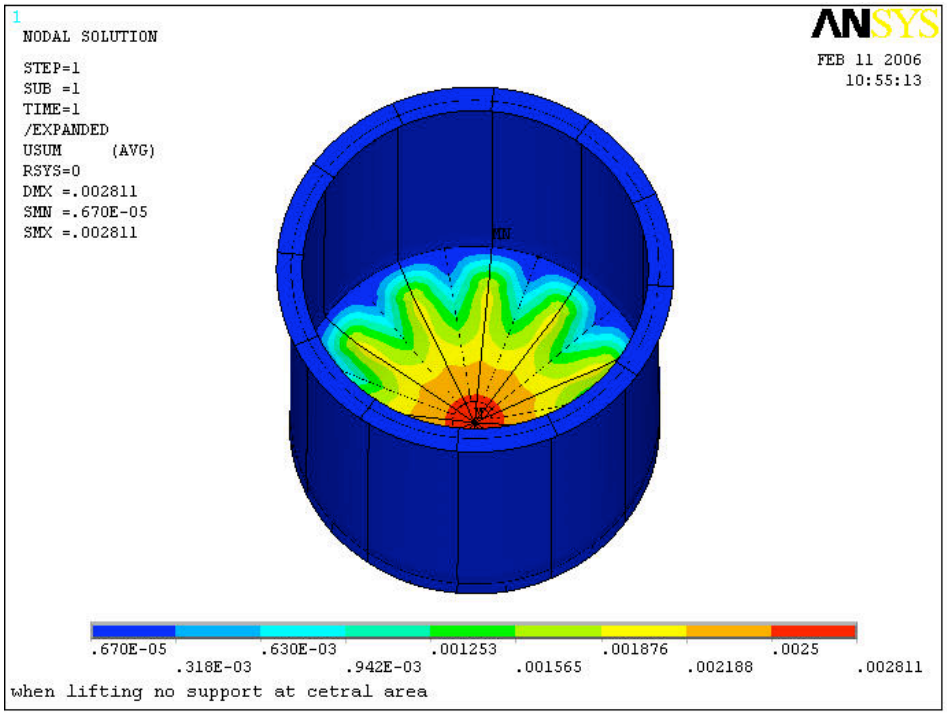

Detector Instrumentation

Monitoring Goals: - mechanical stability during filling, transport, and movement

- liquid levels during filling

- acrylic vessel positions

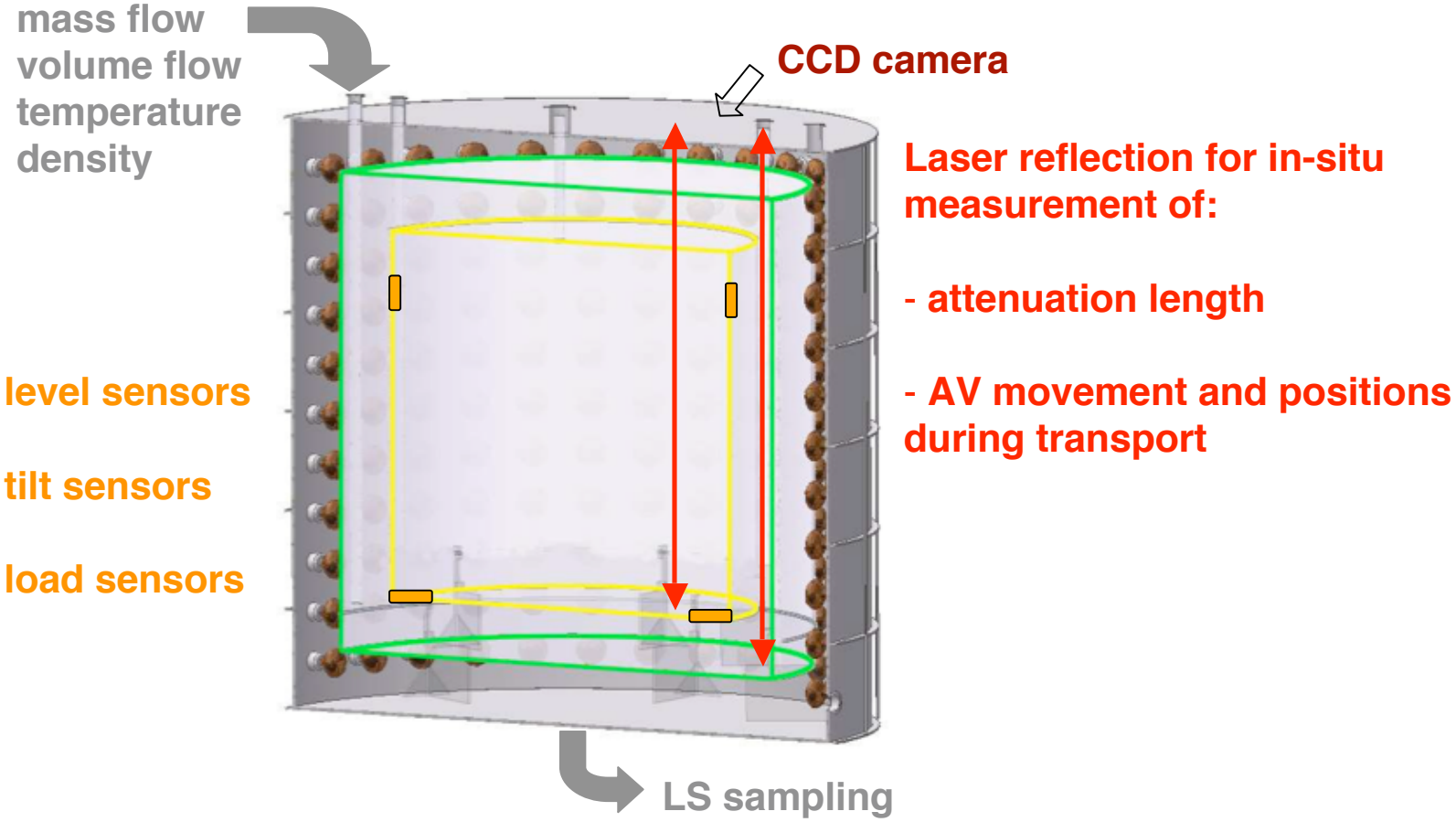

Filling of the Detector

Three Liquids:

I. Target: 0.1% Gd-loaded liquid scintillator
II. Gamma catcher: liquid scintillator, 45cm
III. Buffer shielding: mineral oil, ~45cm

Mass Measurements: mass + volume flow
load sensors

Example: Coriolis Mass Flow Measurements

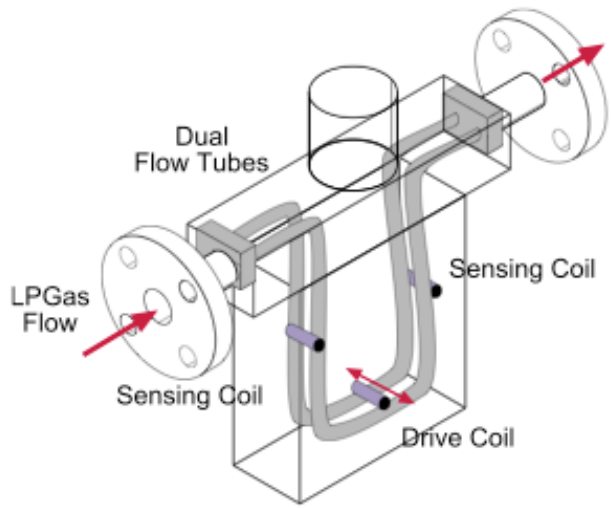

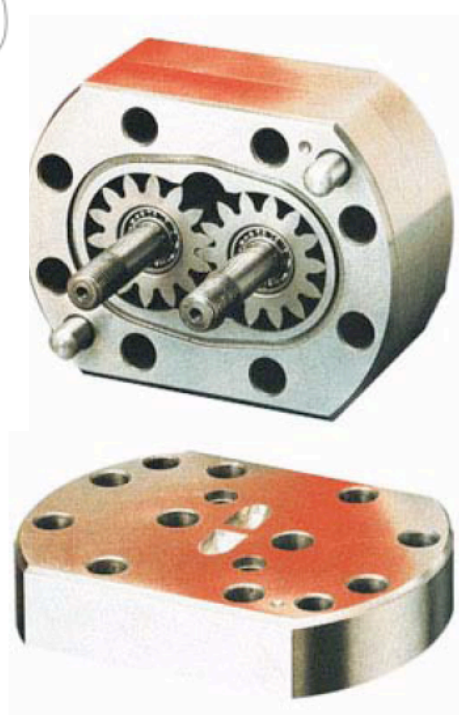

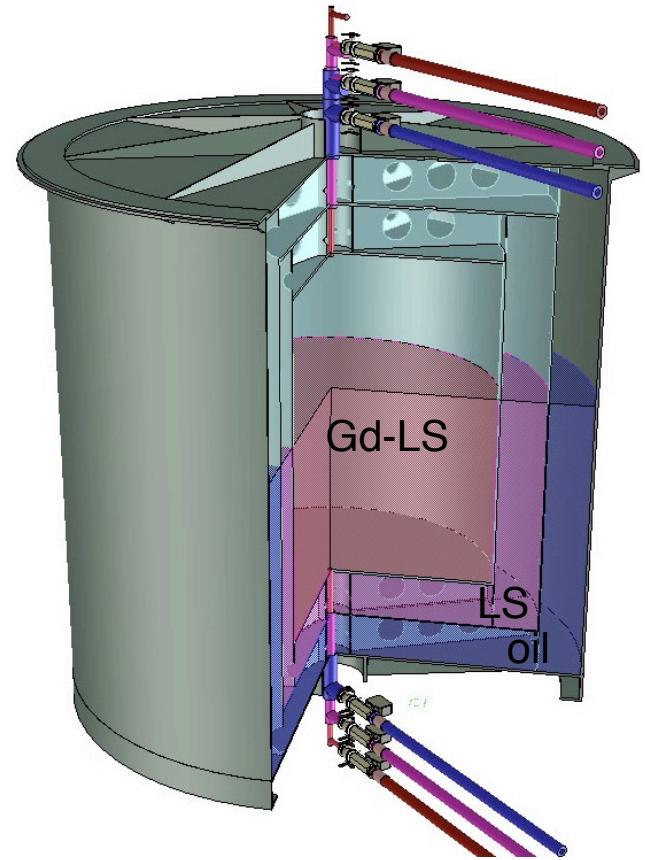

Possible mass flow rates of 1g/hr - 8000kg/hr with <u>0.1% repeatability.</u>

- Flowmeters – 0.02% repeatability

→ Baseline = 0.2%
→ Goal = 0.02%

Liquid Scintillator

- Gd loading significantly reduces background due to the short capture time and high capture energy
- Require **stable** Gd-loaded liquid scintillator with
  - high light yield
  - long attenuation length

Gd-LS Optical Attenuation: Stable ~700 days

- R&D effort:

- Gd (carboxylate ligands) in PC and dodecane
- all stable for a year
- att. Length > 15m
- promising new scintillator: LAB

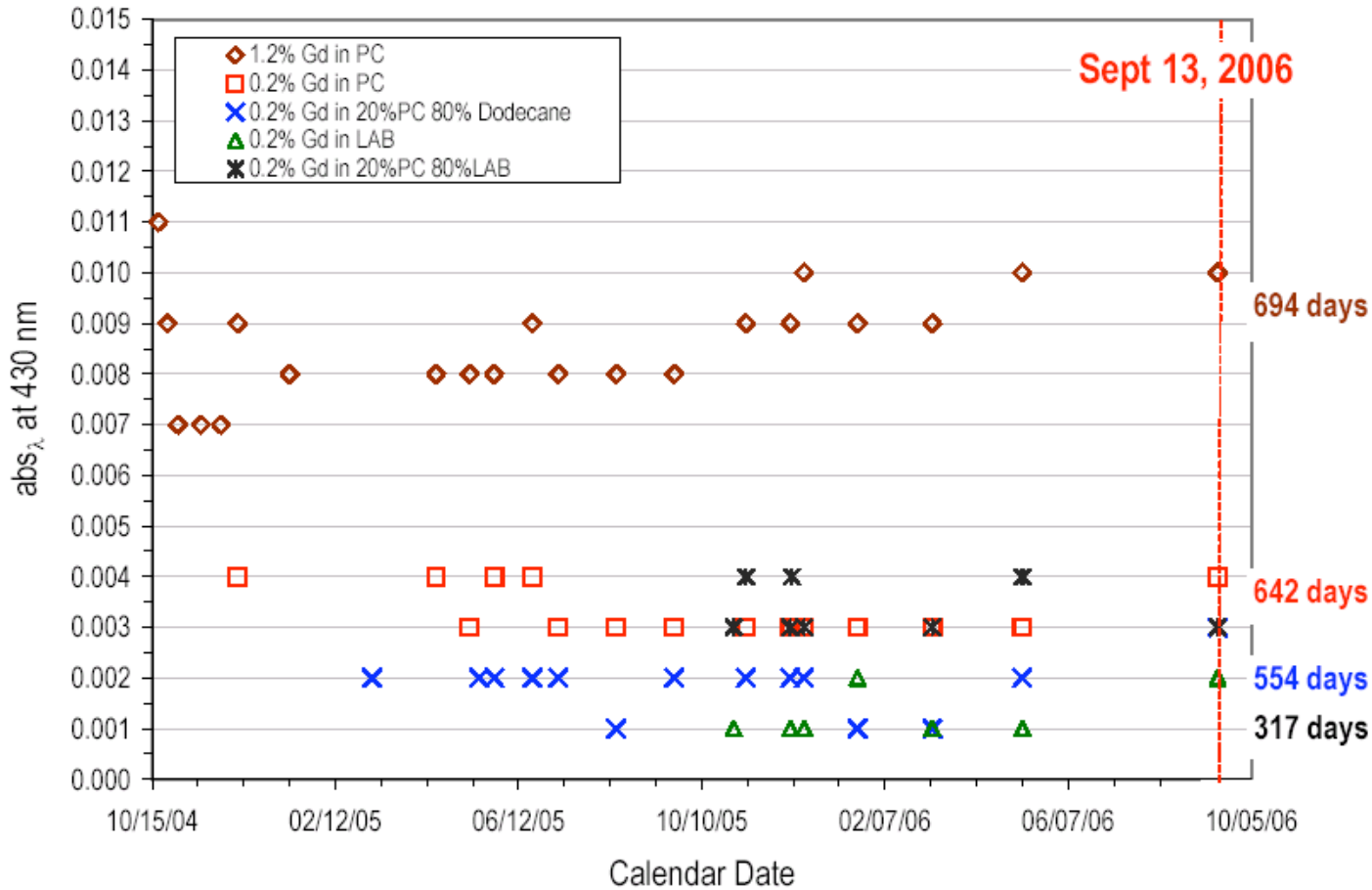

Determine H and Gd in LS

Combustion Analysis

Gd-LS decomposition in O_2:

LS: $C_xH_y + (x + y/4).O_2 \rightarrow x.\ CO_2 + y/2.H_2O$

Gd: $2.Gd + (3/2).O_2 \rightarrow Gd_2O_3$

1. Potential of measuring C, H and Gd simultaneously in good precision.
2. Samples were measured by certified, commercial laboratory; achieved C/H measurements at 0.3%. This precision can be improved further.

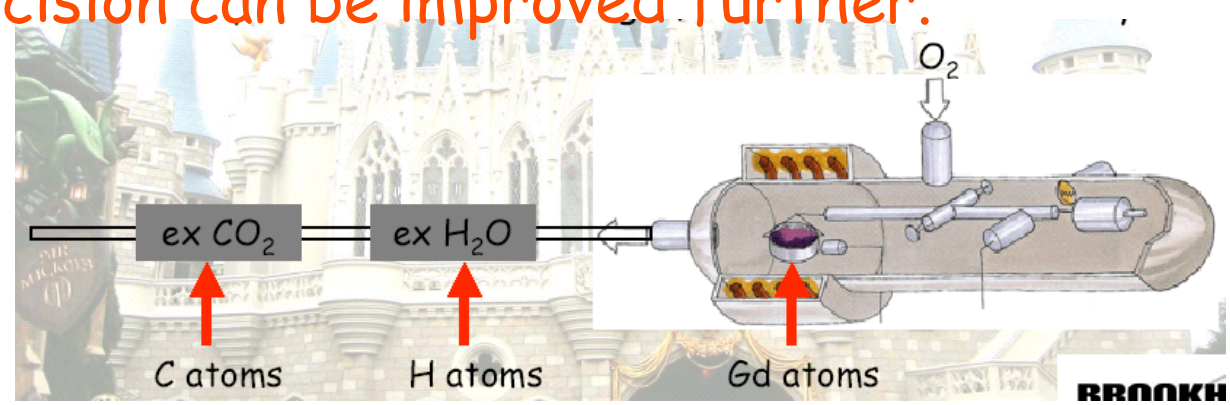

Determine H and Gd in LS

Prompt Gamma Activation Analysis

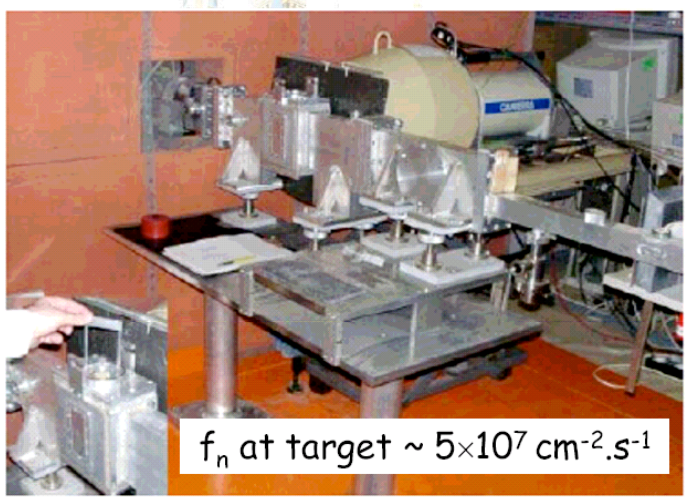

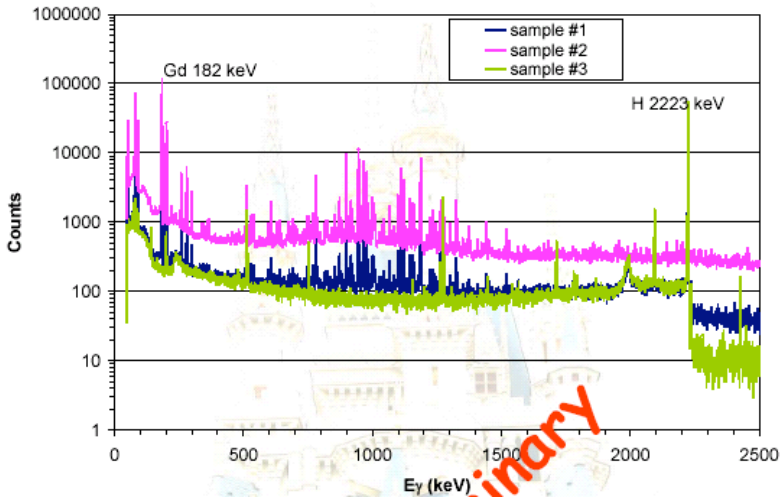

1. See 2.2-MeV γ from H; 0.18-MeV and other γ's from Gd from thermal neutron capture.
2. Samples were measured by the Institute of Isotopes, HAS; achieved Gd and H measurement at 1%; the precision needs to be improved.

Performance of Gd in PC and LAB

Optical Spectra

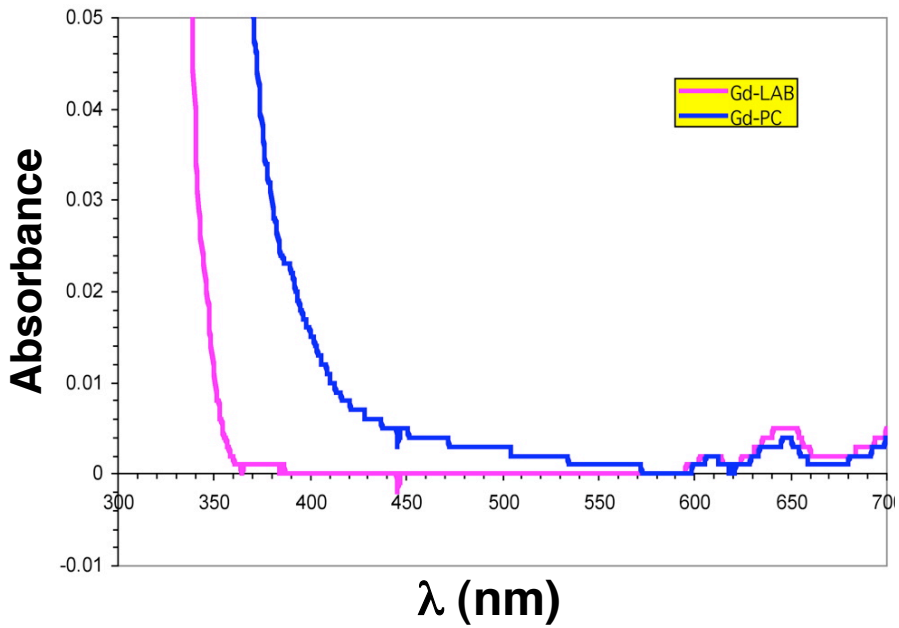

Light Output Spectra

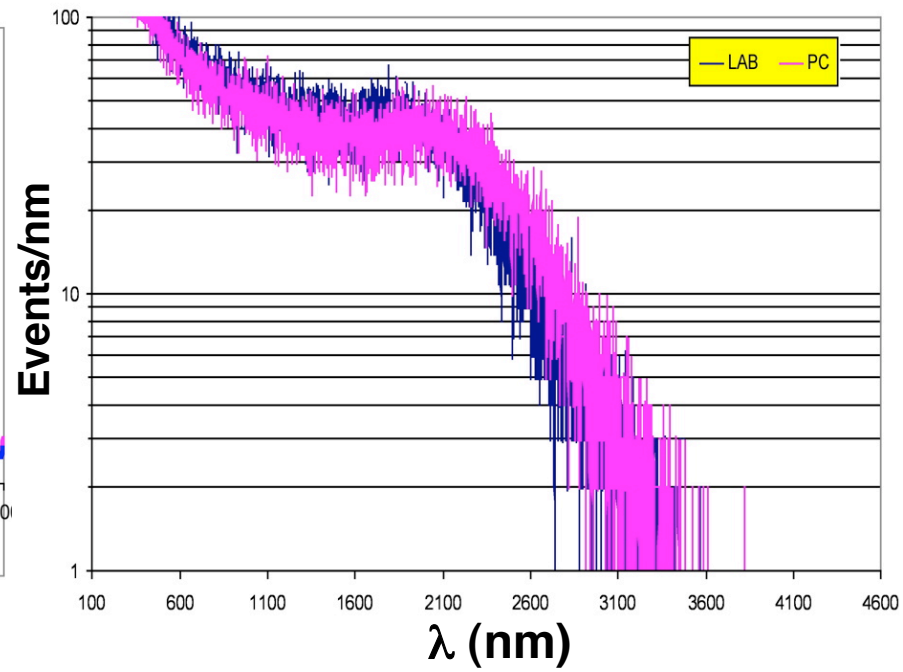

- Have produced ~1% Gd in LAB and PC. Will dilute to ~0.1% Gd in Daya Bay experiment.
- Graph above demonstrates LAB's lower optical absorption (longer attenuation length). LAB has better chemical and ESH properties.
- Graph shows LAB and PC have very similar light output efficiency

PMTs

- 224 8” PMTs in 7 rings of 32
- Low-radioactivity glass
- Two candidates
  - Hamamatsu R5912
  - Electron Tubes 9354KB
- Magnetic shielding under investigation

Electronics

Charge Specifications:

Dyn. Range 0.025-500p.e.
Noise < 0.1p.e.
Shaping time: 300ns
Sampling freq: 40MHz

Time Specifications:

Resolution <500ps

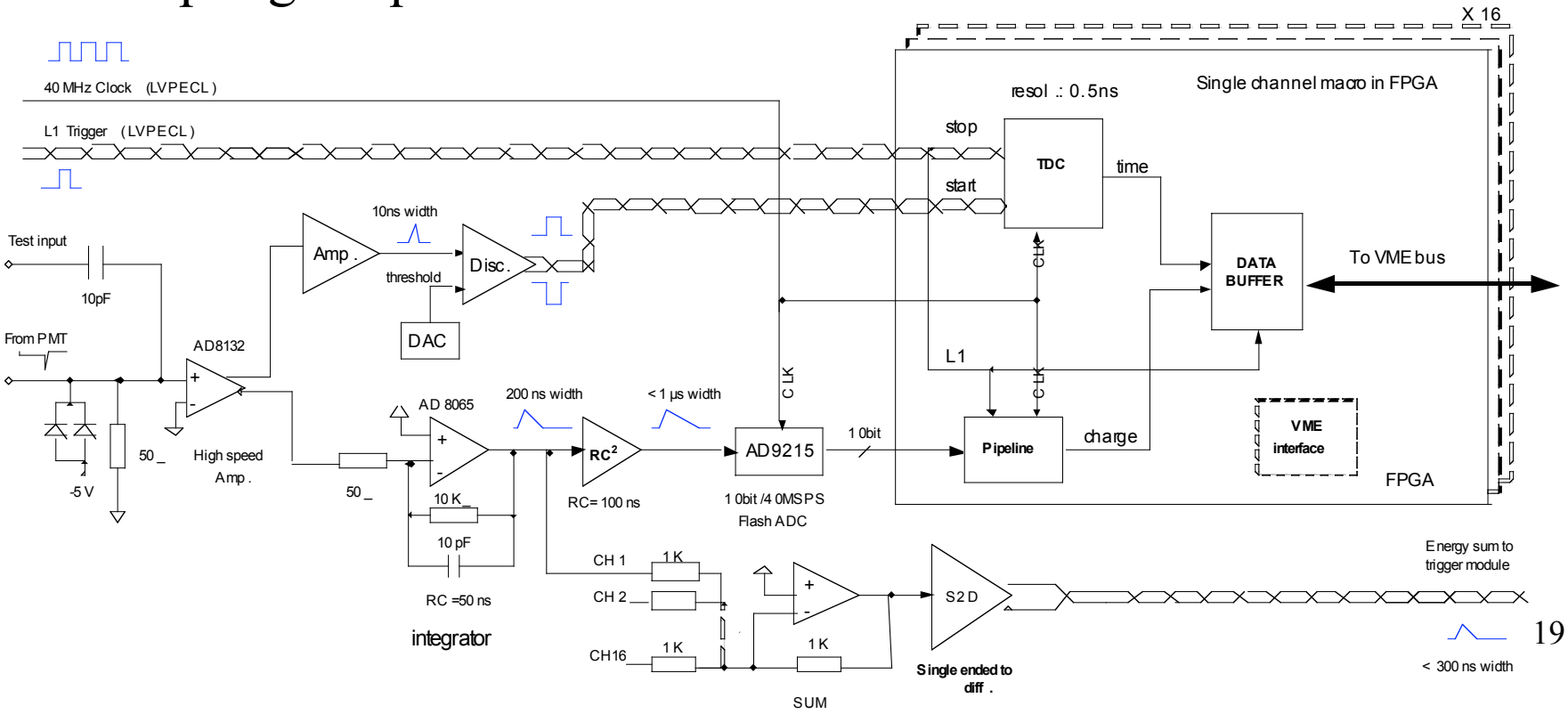

Electronics (Trigger)

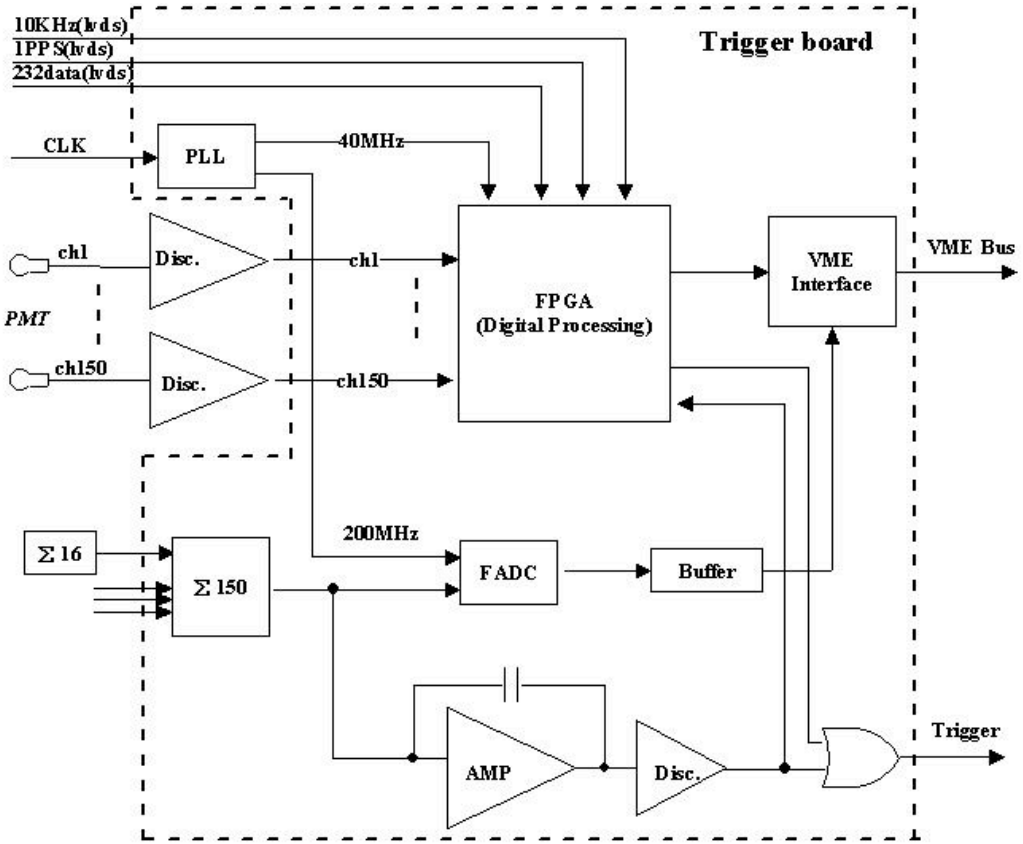

Calibration

- Load sensors, level sensors, thermometers, flow meters, mass flow meters
- LED
- Radioactive sources: ^{68}Ge (1.022 MeV), ^{60}Co (2.5 MeV), ^{252}Cf
  - 3-4 locations (with full z travel)
- Data (^{12}B, neutrons, Michel electrons)
- Determine/maintain energy scale to 1% throughout detector volume

Calibration

LED Calibration

Calibration Goal: PMT gains

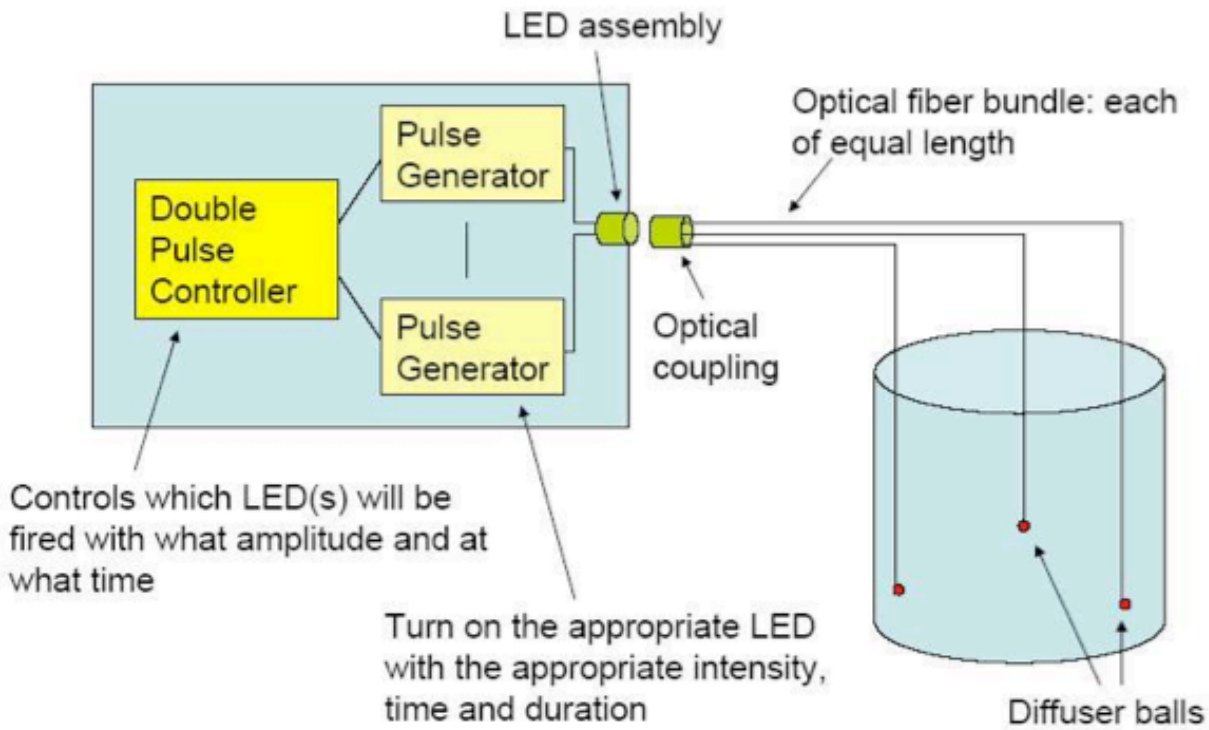

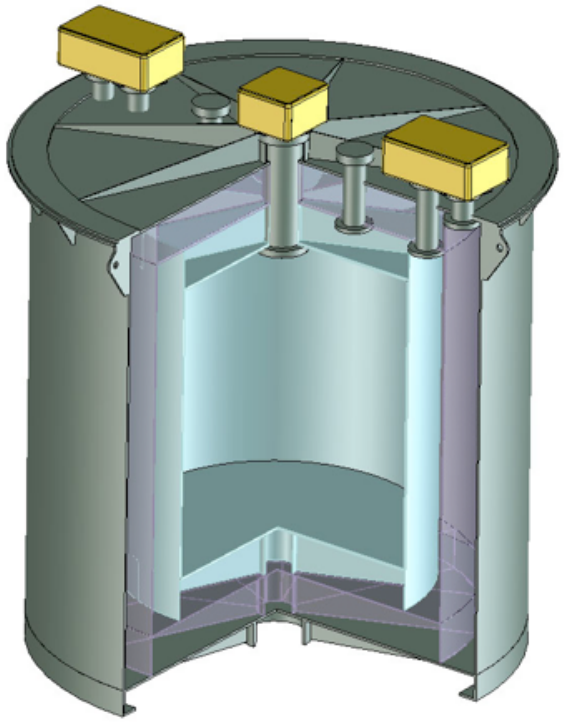

Performance

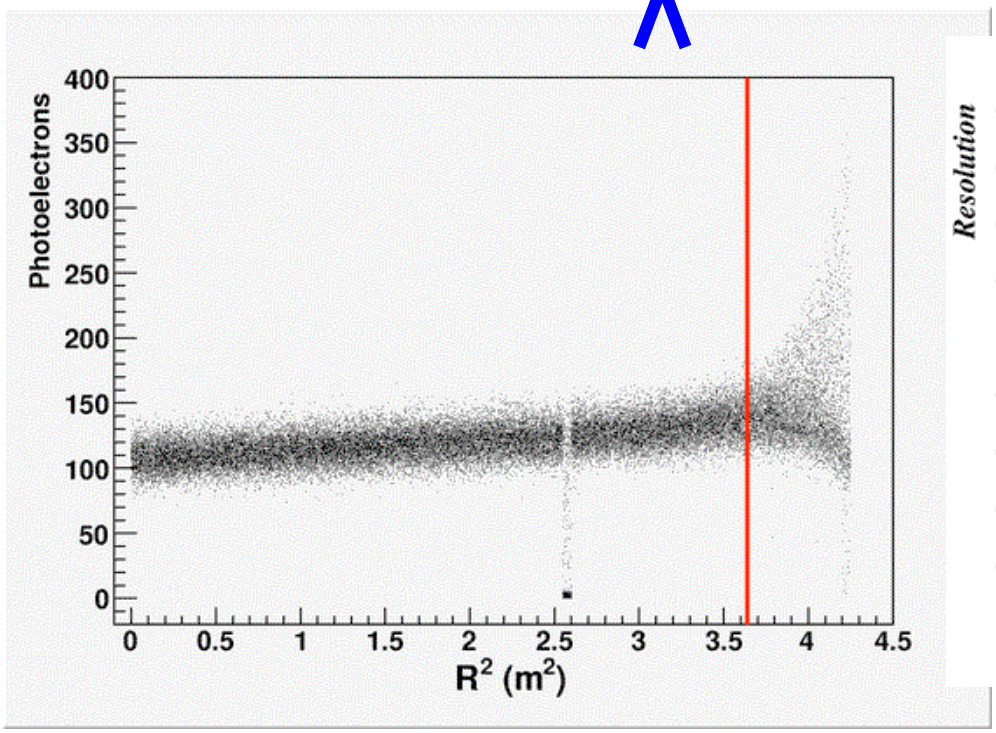

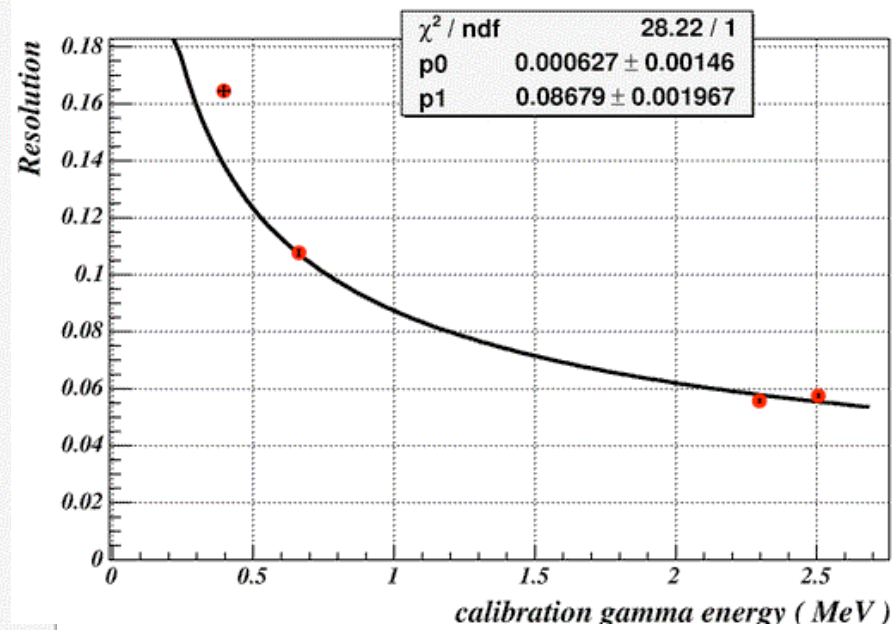

- 224 PMTs with 12% effective photocathode coverage
- ~100 p.e./MeV: 12.5%/√E

Performance (2)

- 0.5 ton prototype at IHEP (currently unloaded LS)
- 45 8” R5912 PMTs with 14% effective photocathode coverage
- ~240 p.e./MeV and 9%/√E

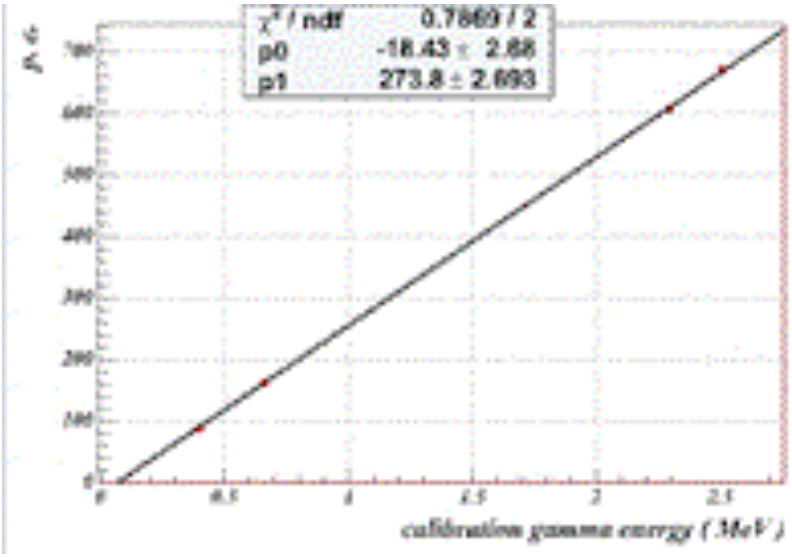

Linearity

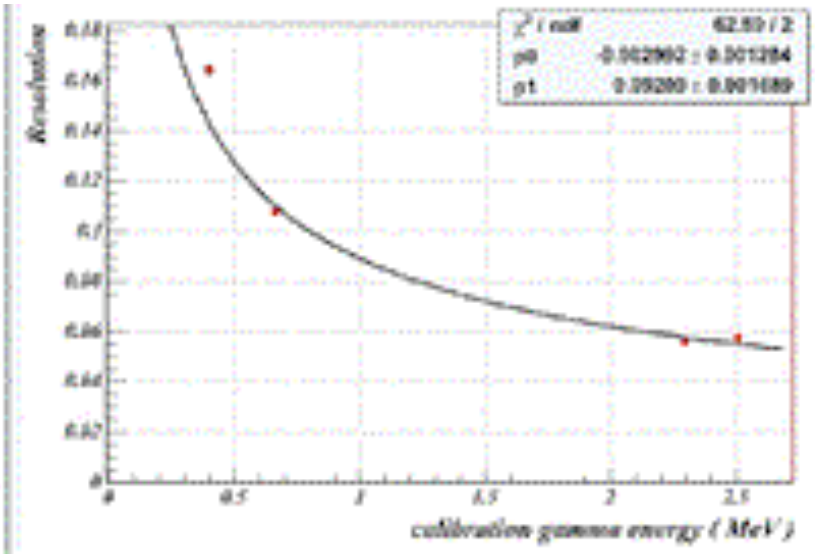

Energy Resolution

- CHOOZ = 0.8% absolute
- Baseline 0.2%
- Goal = 0.05% for 2% energy calibration

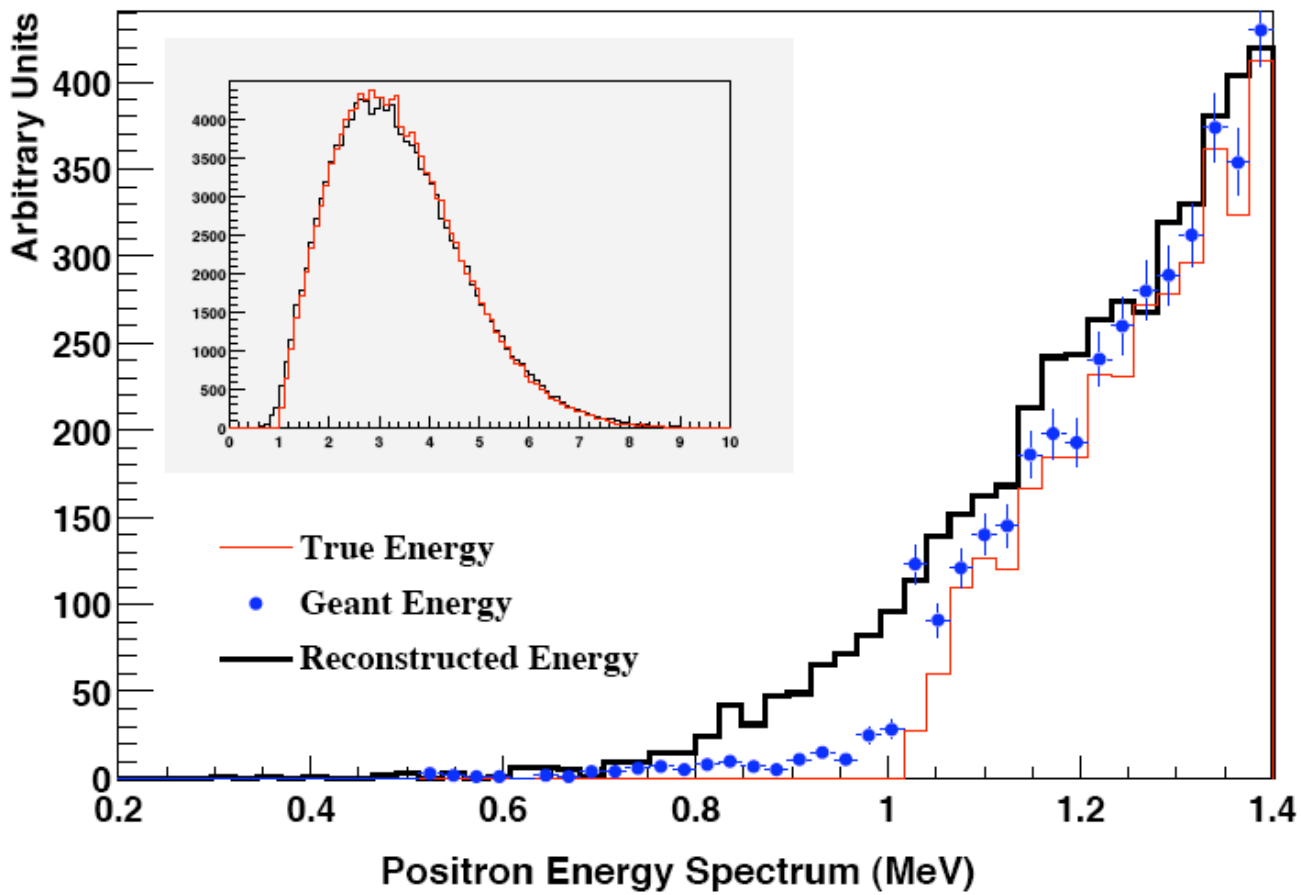

One Possible Deployment and Commissioning Scenario

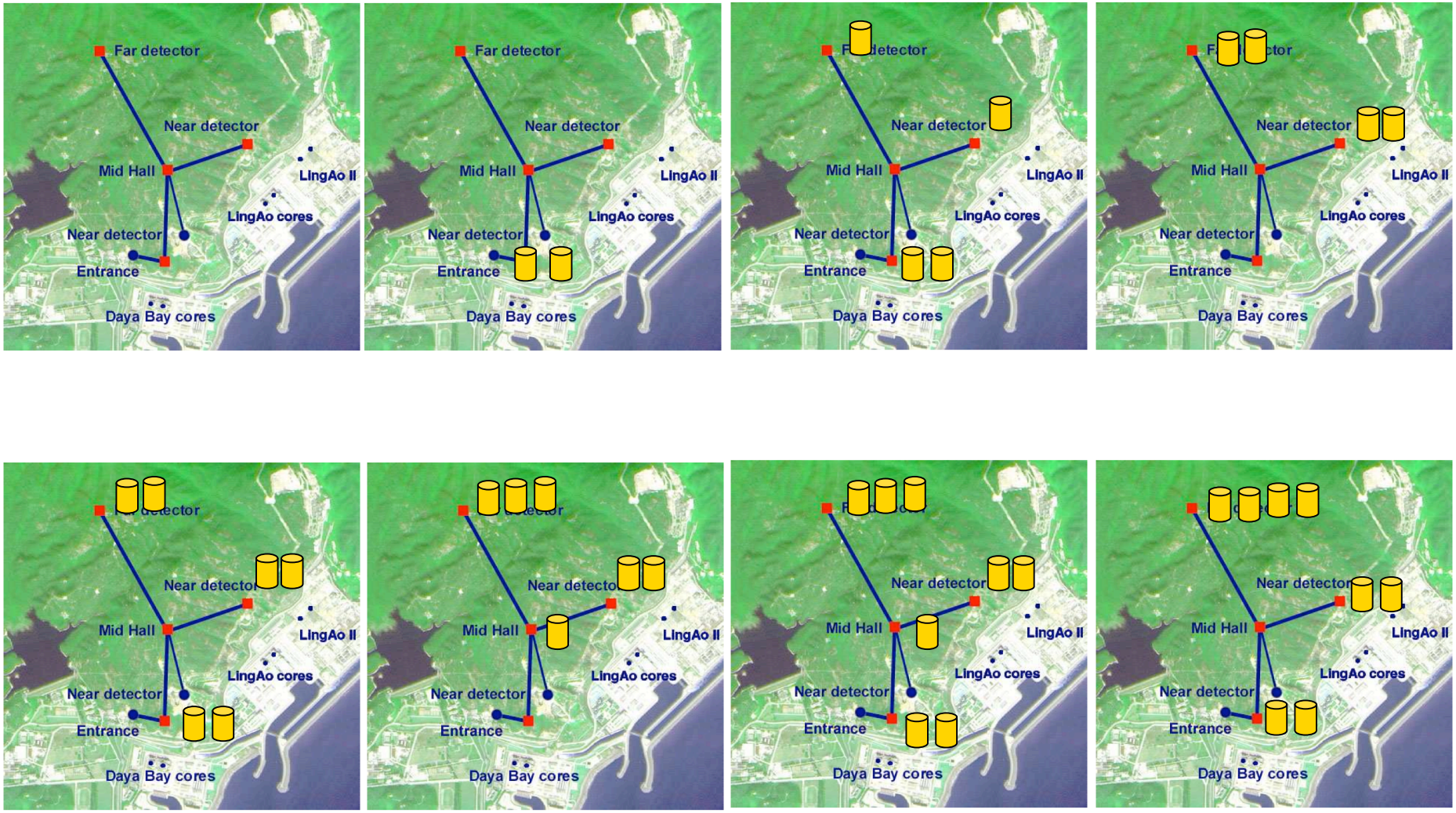

Summary