REVISION HISTORY			
Rev	Description	Date	Appd
A	RELEASED	8/26/09	R.Duffin

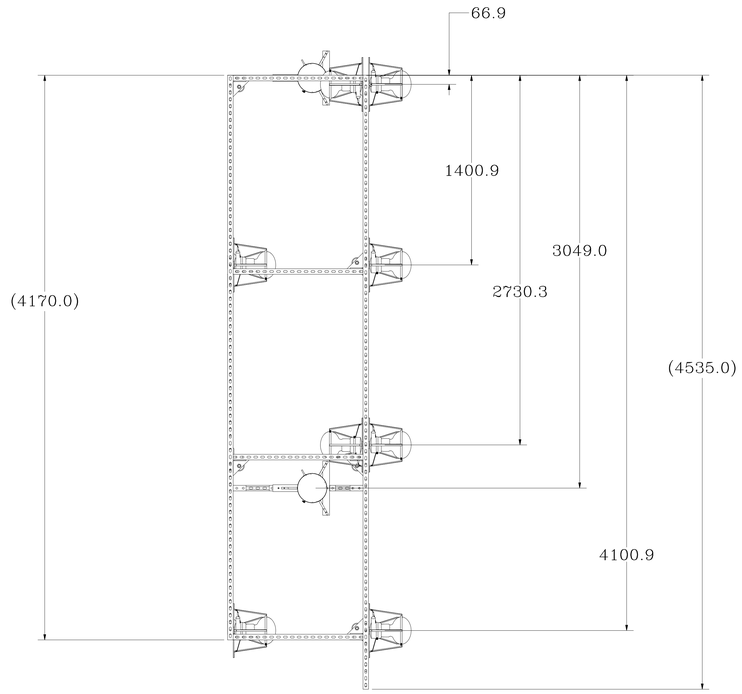

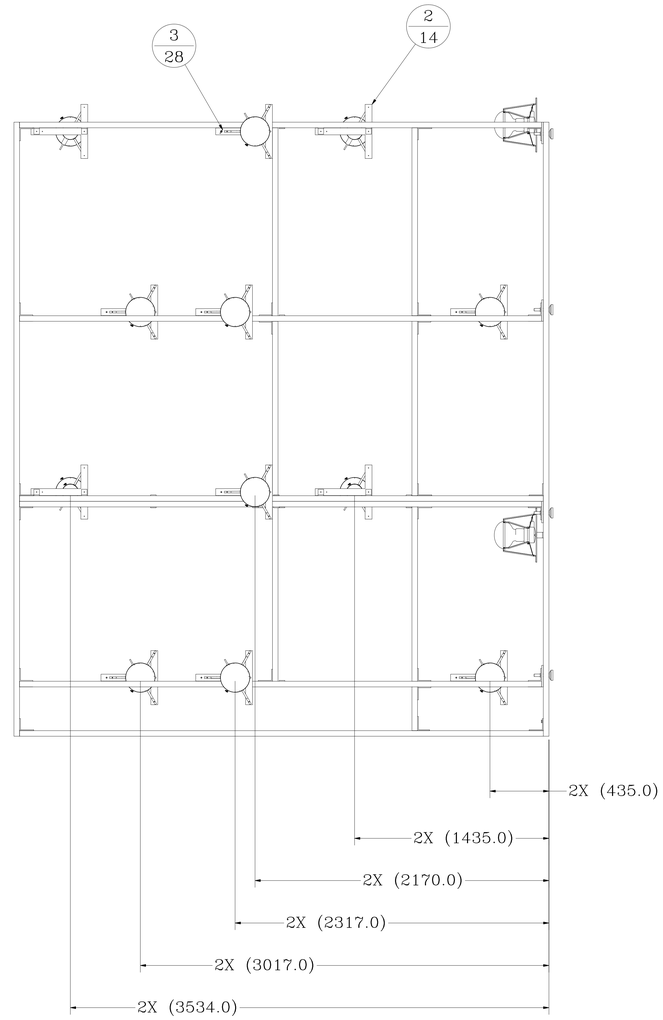

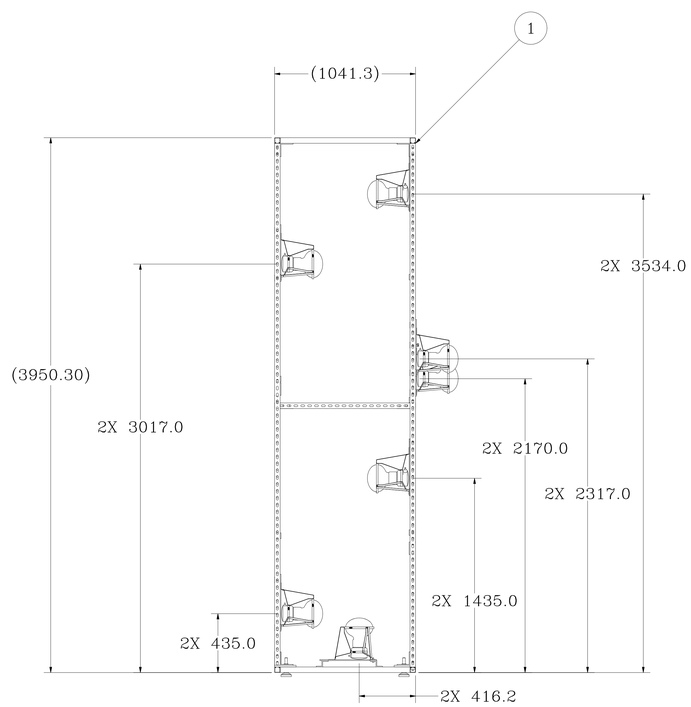

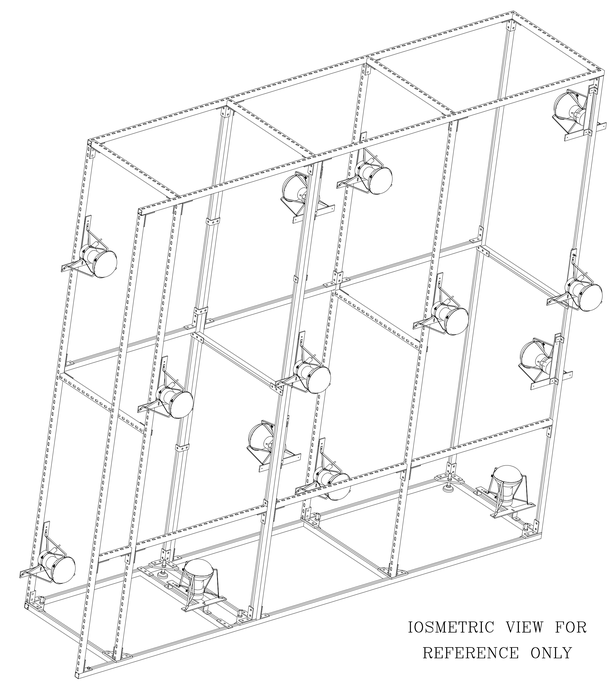

IOSMETRIC VIEW FOR
REFERENCE ONLY

ITEM	QTY	PART NUMBER	DESCRIPTION	VENDOR
3	28	93575A030	WING NUT, SST, 5/16-18	McMASTER CARR OR EQUIV.
2	14	DB-MS-2-0132	PMT ASSY	
1	1	DB-MS-2-0019	5 METER LEFT FRAME, No.3 (FLOOR)	

Parts List

QTY	DRAWING NO.
4	DB-MS-2-0135
2	DB-MS-2-0048

USED ON

REVISION STATUS OF SHEETS

REV | SHEET

THIRD ANGLE PROJECTION

INTERPRET IN GENERAL ACCORDANCE WITH ASME Y14.5M-1994
UNLESS OTHERWISE SPECIFIED ALL DIMENSIONS ARE IN MILLIMETERS
DECIMAL TOLERANCE
.X ± 0.5
.XX ± 0.40
.XXX ± 0.130
ANGLES ± 0°

Daya Bay Dwg No.

Drawn by	A. Rega	8/26/09
Engineer	R. Duffin	8/26/09
Production Approval	C. Pearson	8/26/09
Project Office	R.L.Brown	8/26/09

BROOKHAVEN NATIONAL LABORATORY
Upton, NY 11973

DAYA BAY
MUON PMT SUPPORT
5 METER, LEFT, No.3 (FLOOR)

SIZE A0 | DRAWING NUMBER DB-MS-2-0075 | REV A

CATEGORY: | SCALE 1/16 | WEIGHT: | SHEET 1 OF 1