Homestake DUSEL

Large Cavity Preconstruction Update

Syd De Vries, P.Eng

Underground Construction Project Manager

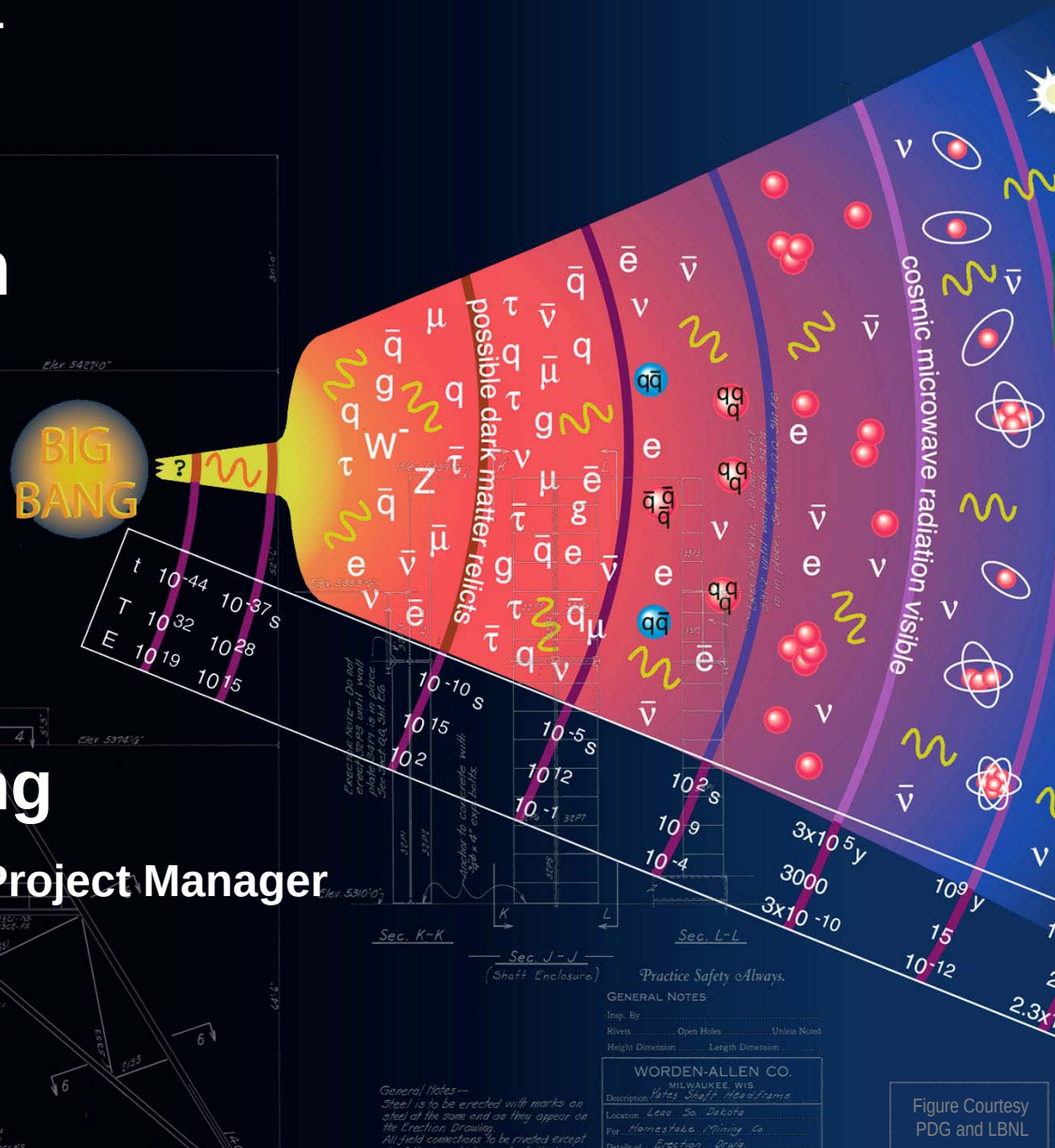

Figure Courtesy PDG and LBNL

LBDUSEL Meeting
UC Davis, 26 February 2009

Large Cavity Preconstruction Update

Topics

1. Large Cavity Advisory Board
   - NSF Review Presentation
   - Recommendations - Highlights
2. Preliminary Geotechnical Site Investigation Plan
3. Current Excavation Plans
4. Large Cavity Design Issues

Large Cavity Advisory Board

Ed Cording Evert Hoek John MacDonald Derek Martin

The Large Cavity Advisory Board (LCAB) was established in January 2008 to provide technical expertise and advice to the DUSEL project directorate on issues of siting, excavation, excavation stabilization and monitoring of large-scale excavations at significant depth in Homestake. All members have experience in the design and construction of large underground cavities in a wide range of rock mass and in situ stress conditions.

The LCAB will report to Kevin Lesko in his capacity as DUSEL Principal Investigator, UC Berkeley.

Structural geology at 4850 level

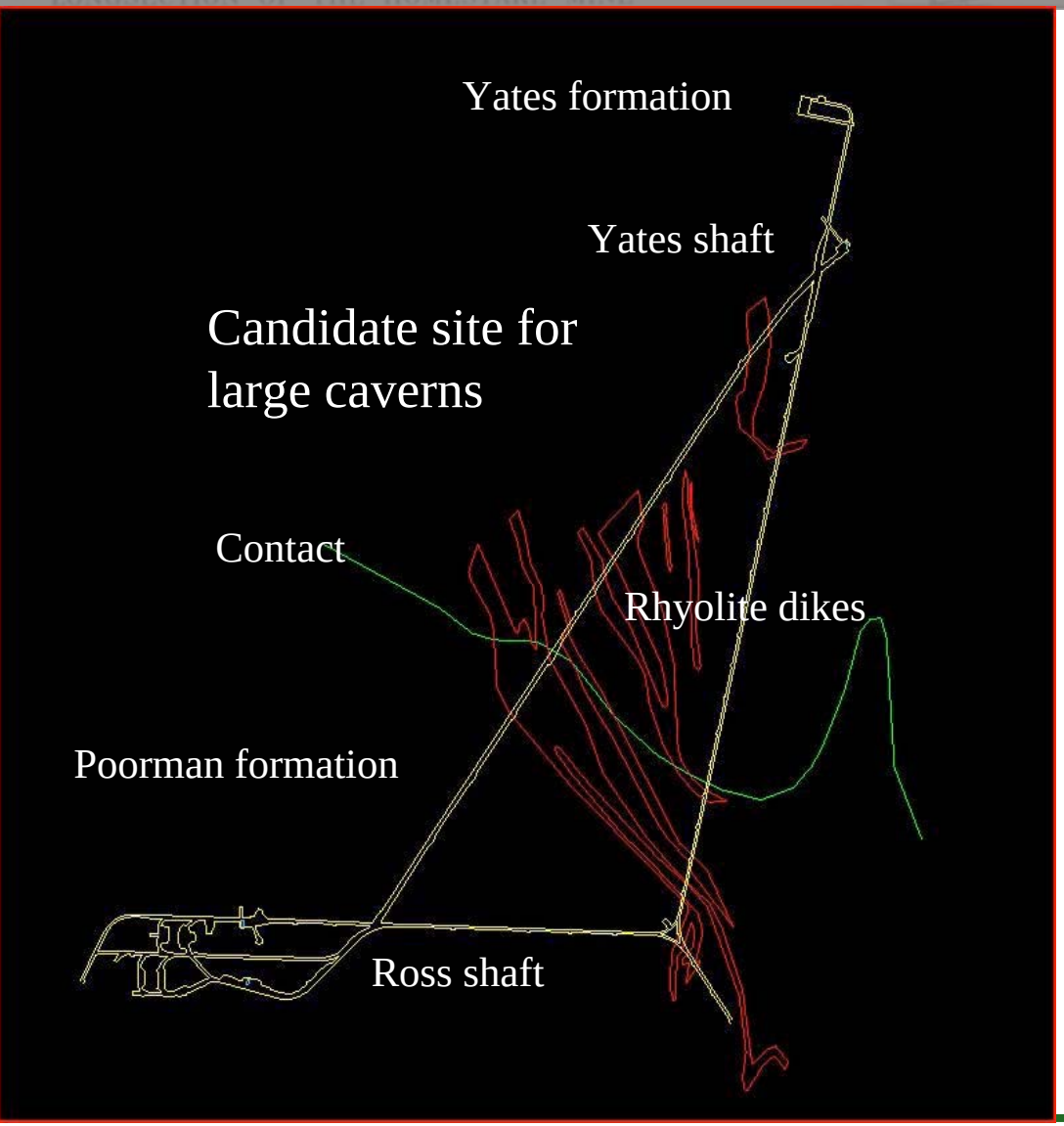

The candidate site for the large caverns is in the Yates formation to the west of the drift connecting the Yates and Ross shafts. The geology of this area is largely unknown since it is in waste rock and therefore of little interest to mine geologists. However, there is ample evidence to suggest that there are several joint sets, through-going rhyolite dikes and possible some faults in the area. **It is probable that these structural features, rather than the properties of the intact rock, will dominate the design of the caverns.**

LCAB suggested exploration sequence

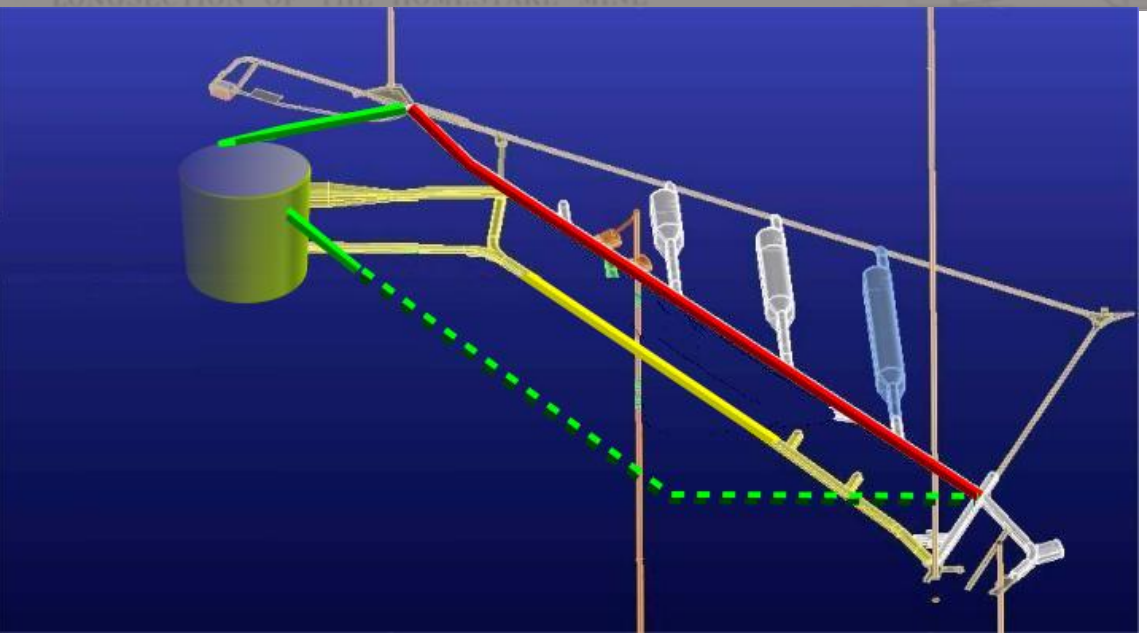

1.Create a detailed structural geology map along the drift between the Yates and Ross shafts (shown in red).

2. Combine this mapping with mapping along drifts on levels above 4850 and use Vulcan to create a 3D map of joints, dikes and faults in the target rock mass.

3.Based on this 3D model, carry out an optimization of cavern location(s).

4. Mine an exploration drift (shown in green) into the top of the proposed cavern location and extend it, in a direction crossing major geological features, far enough to provide sufficient information for a reliable structural model. This drift can be extended later (shown dashed) to investigate alternative or additional cavern locations.

5. Short hole diamond drilling can be carried out for sample collection, stress measurements or other studies from this exploration drift.

6. Locate the first cavern and carry out detailed studies on optimum shape, support requirements, excavation method and sequence.

LCAB Report

Recommendations - Highlights

- The construction of large cavities - with spans in the order of 60 m, at the 4850 level at the chosen location - is feasible.
- The optimum siting for the caverns within the current target location has to be based on currently available information, supplemented by mapping and interpretation of structural features in the existing drifts. There is an urgent need to create an engineering-geological model for use in the selection of an optimum site for the first large cavern.
- The stability of the proposed caverns will be controlled by structural features, such as the rhyolite dikes, rather than the intact rock properties. The properties of the intact materials, while still important, will play a secondary role.
- Construct an exploration drift to the target location to identify the relevant geology that can impact the construction of the large cavities

LCAB Report

Recommendations – Highlights

- Move the cavities approximately 100 to 150 m offset from the current access drift, rather than the proposed 300 m.
- Provide a single top access drift for all 3 cavities
- Provide a single bottom access drift to all three cavities for muck removal.
- Remove the spiral ramp from the cavern
- Evaluate the logistics for two caverns rather than 3

Large Cavity Preliminary Geotechnical Site Investigation Plan

Planned Sequence of Events

1. Develop a preliminary three dimensional model of structural geology in the Large Cavity Area using existing geological data. Start Date: March 15.
2. Perform detailed structural geology mapping at the 4100 L: completion date by 15 June.
3. Agree on the scope of geological mapping, laser scanning and interpretation for both the Lab Modules and Large Cavities with RESPEC. Completion date: 31 April, including contract extensions.
4. Map the 4850 level. Begin mapping ~15 May and complete mapping by 30 July. Approximately of 2.5 km of drift should be mapped.
5. Incorporate geological mapping and laser scanning data into Structural Geology Model. Target completion by 30 August.

Large Cavity Preliminary Geotechnical Site Investigation Plan

Planned Sequence of Events

6. Confirm optimum location of first Large Cavity by drilling one or two horizontal holes from the 4850 L to extract core. Compare results from core to Structural Geological Model. Determine optimum plan for obtaining necessary geotechnical information. Target completion date - 30 September
7. Complete Preliminary Geotechnical Site investigation program incorporating Core Drilling, Testing, Exploration Excavation. Target Completion – August, 2010

Large Cavity Preliminary Excavation Design

Excavation Options

1. Benching Method

- Top Access at 4850 L, Bottom Access at 5000 L
- Spiral ramp around Perimeter for Horizontal Accesses every 20 ft
- 20 ft Vertical Benches excavated from the top down.

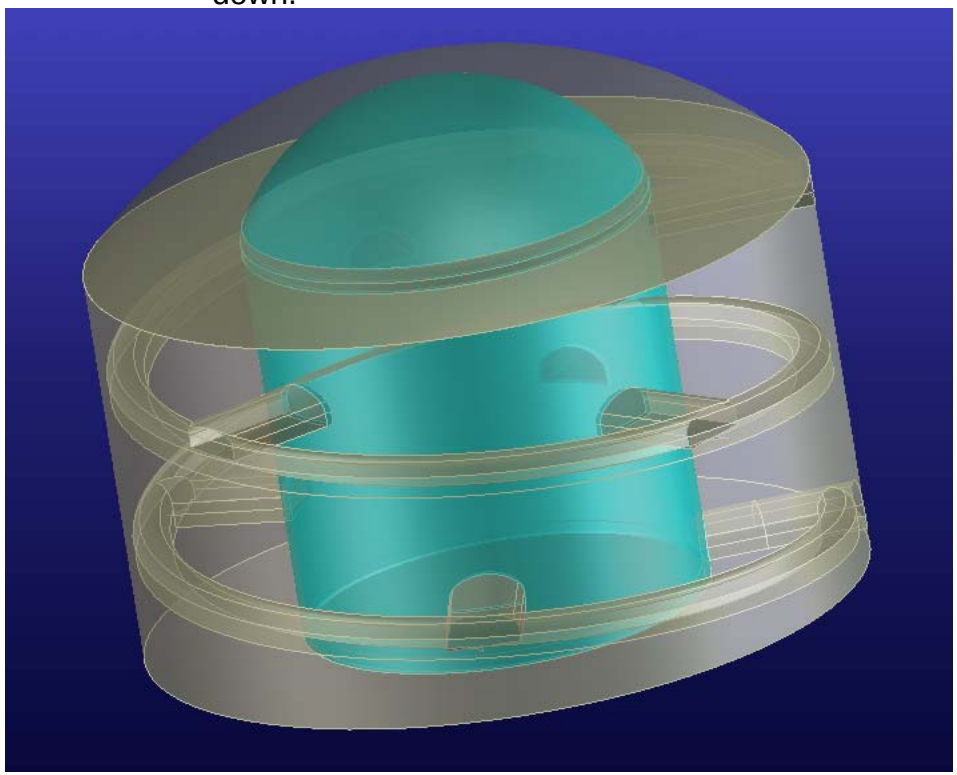

2. Bulk Excavation Method

- Top Access at 4850 L, Bottom Access at 5000L, Center Access at 4925L
- Long hole drilling from 4850L, 4925L, and 5000L
- Blasting from 4850L and 4925L
- Waste rock removal from 4925L and 5000L

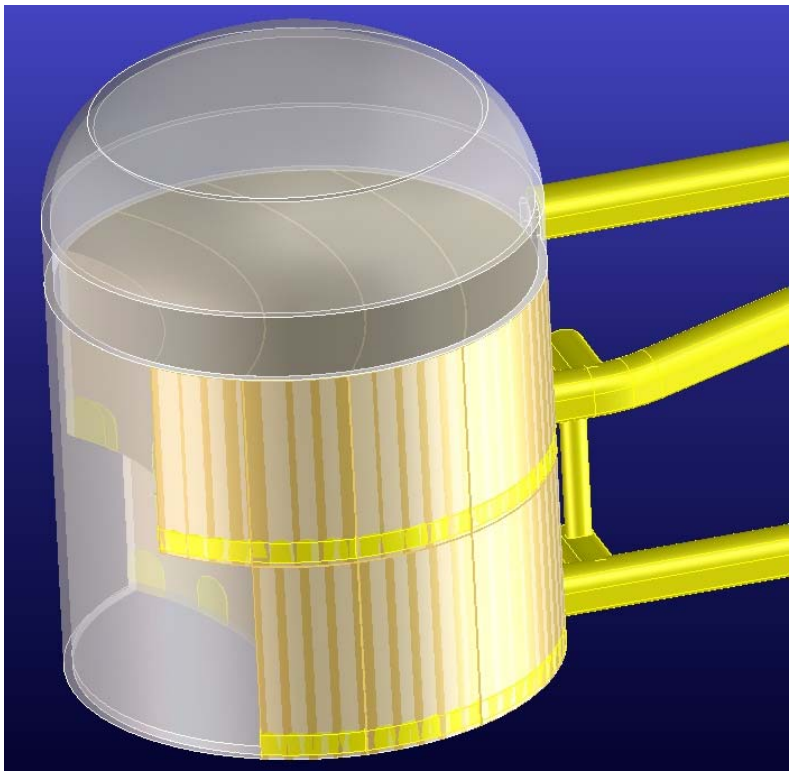

Bulk Excavation Method

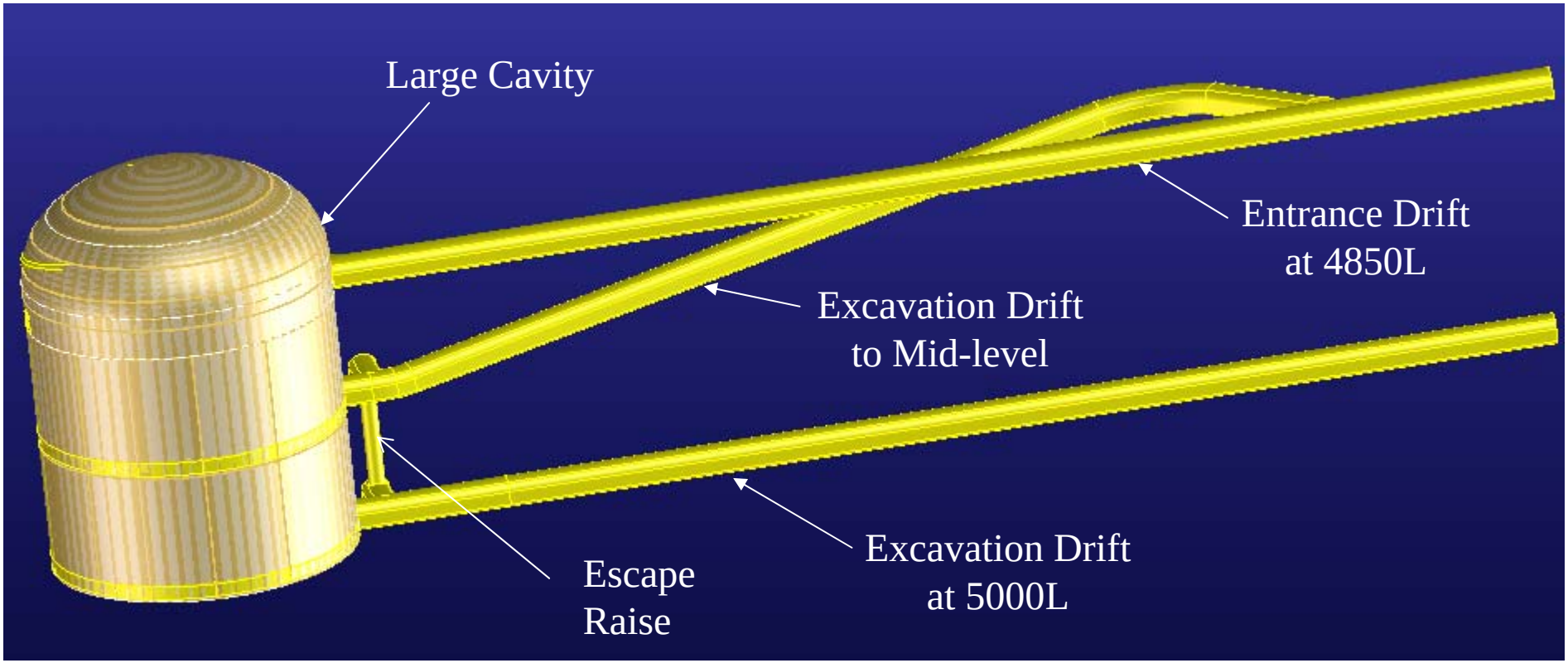

Bulk Excavation Method

Step 1

•Establish Top access at 4850 L

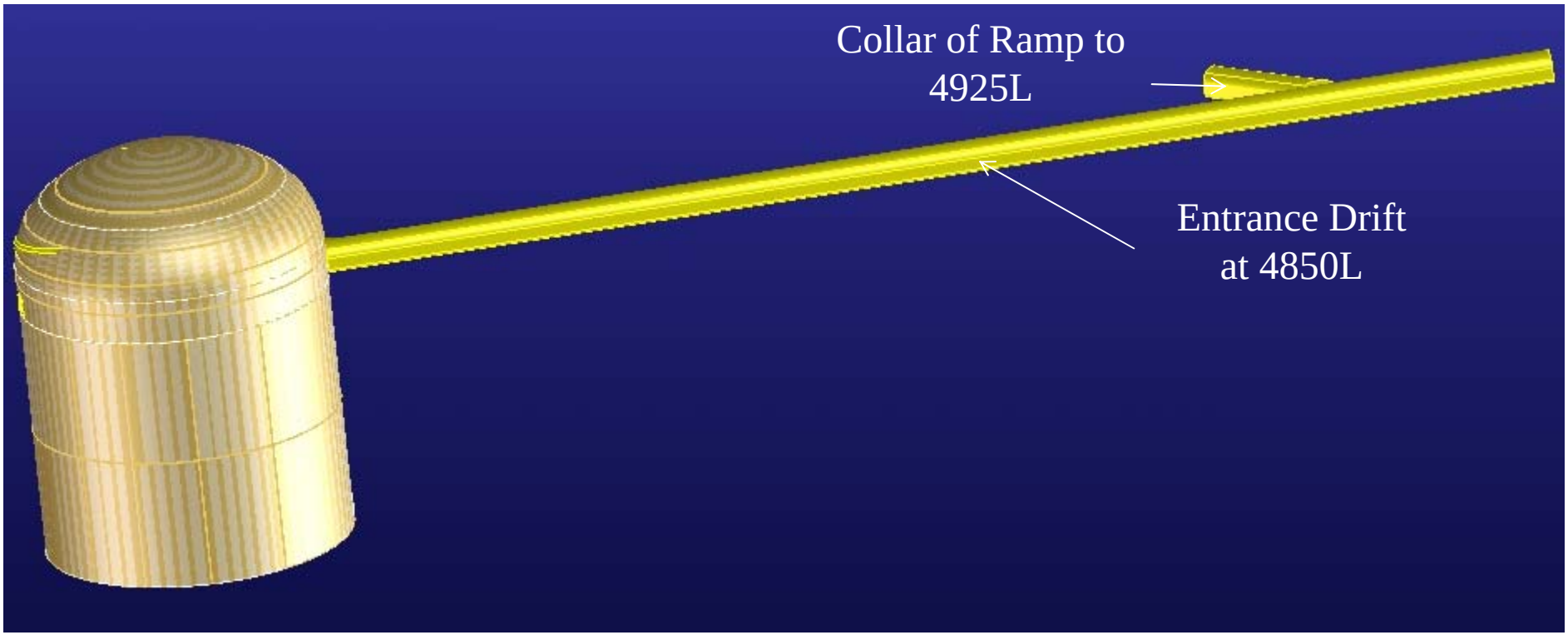

Bulk Excavation Method

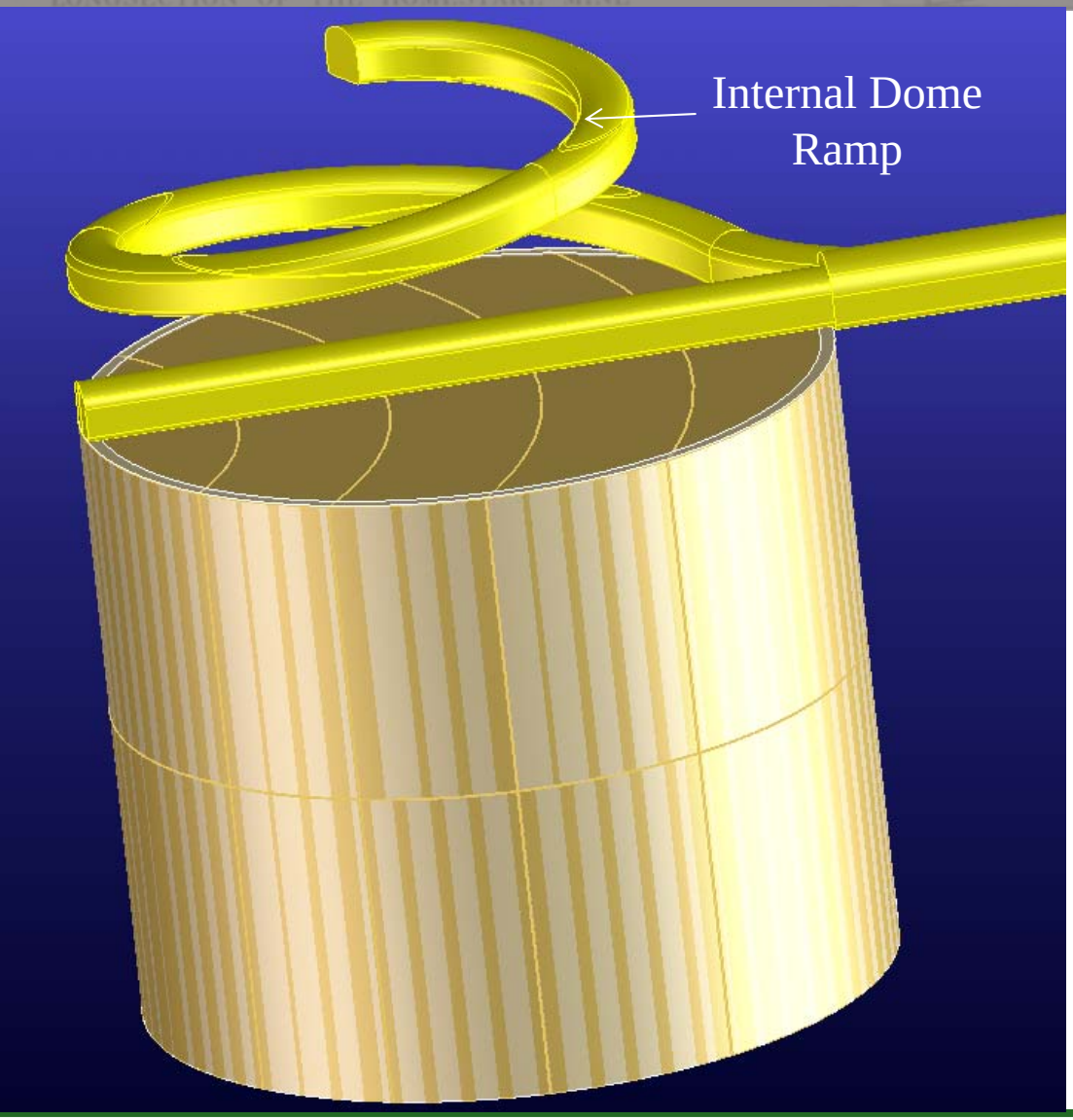

<u>Step 2</u>

•Drive Inclined ramp to the top of the Dome

Bulk Excavation Method

Step 3

•Drive Ramp to 4925L

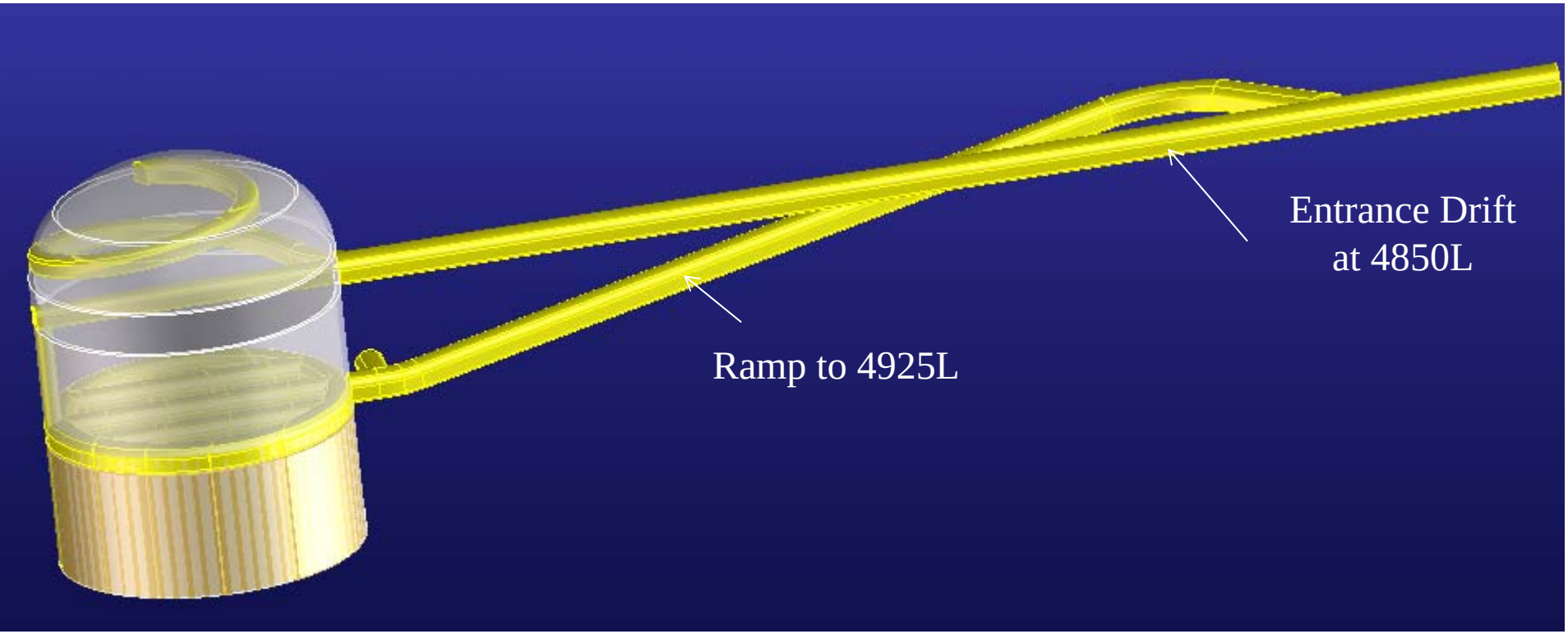

Bulk Excavation Method

Step 4

- Drive Drill Drift at 4925L
  - Provides access for drilling blast holes

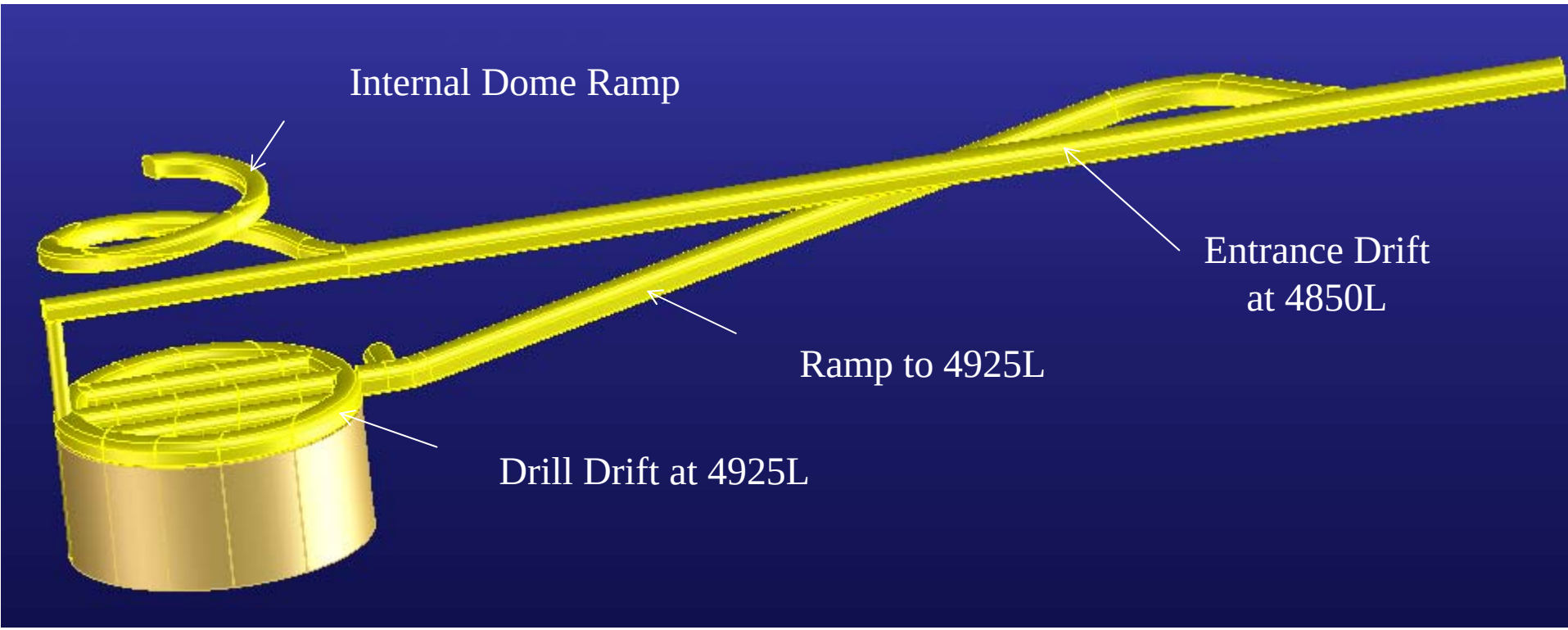

Bulk Excavation Method

Step 5

•Drive bottom access at 5000L

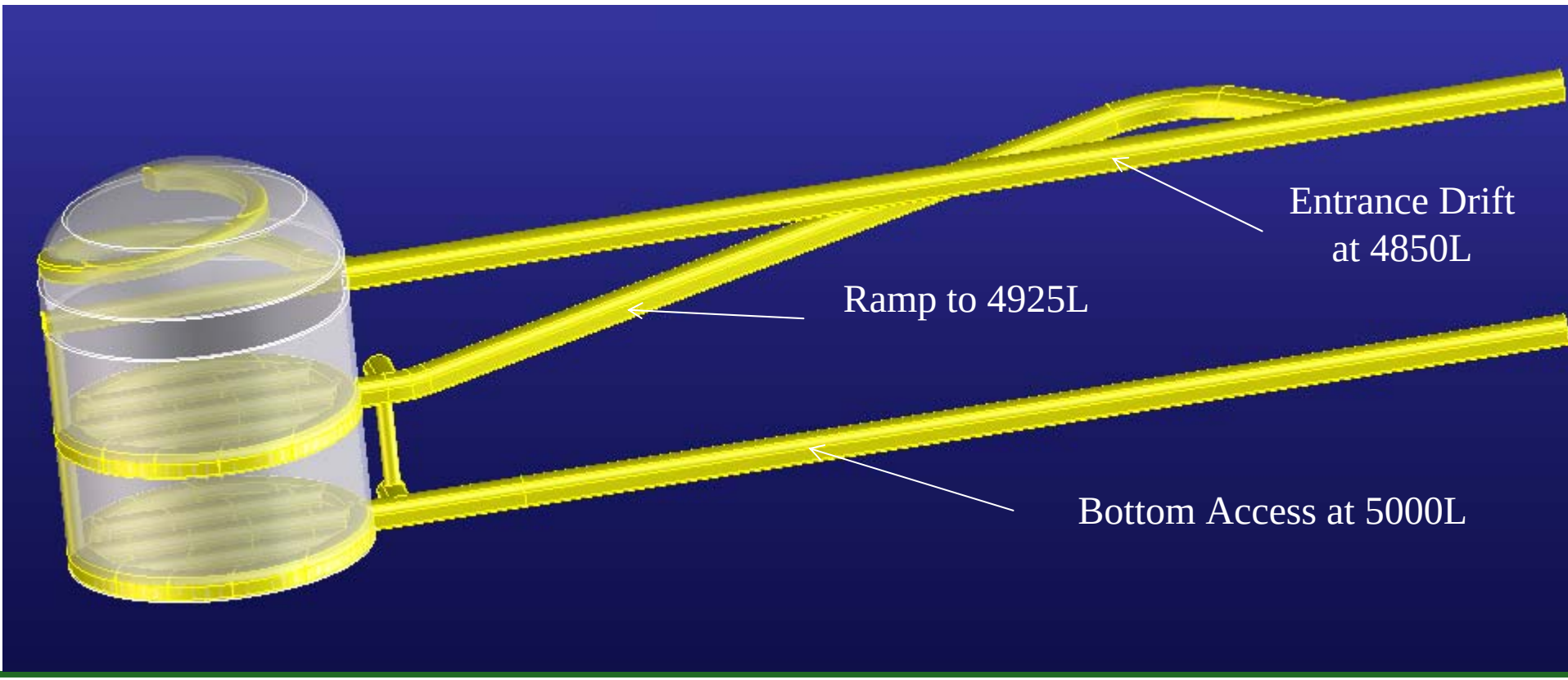

Bulk Excavation Method –All Development

Step 6

- Drive Drill Drifts on 5000L for Blast Hole Drilling
- Drive Escape Raise
- Drive Slot Raise

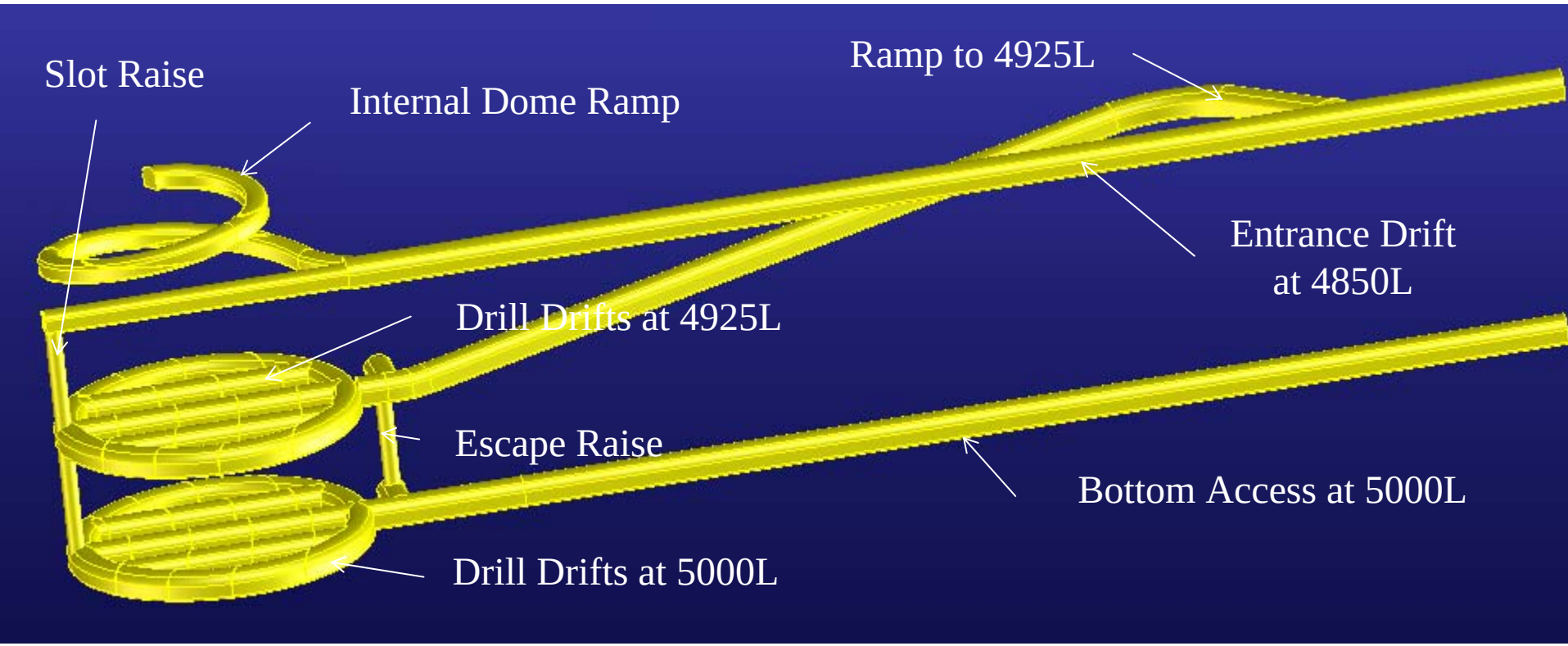

Bulk Excavation Method

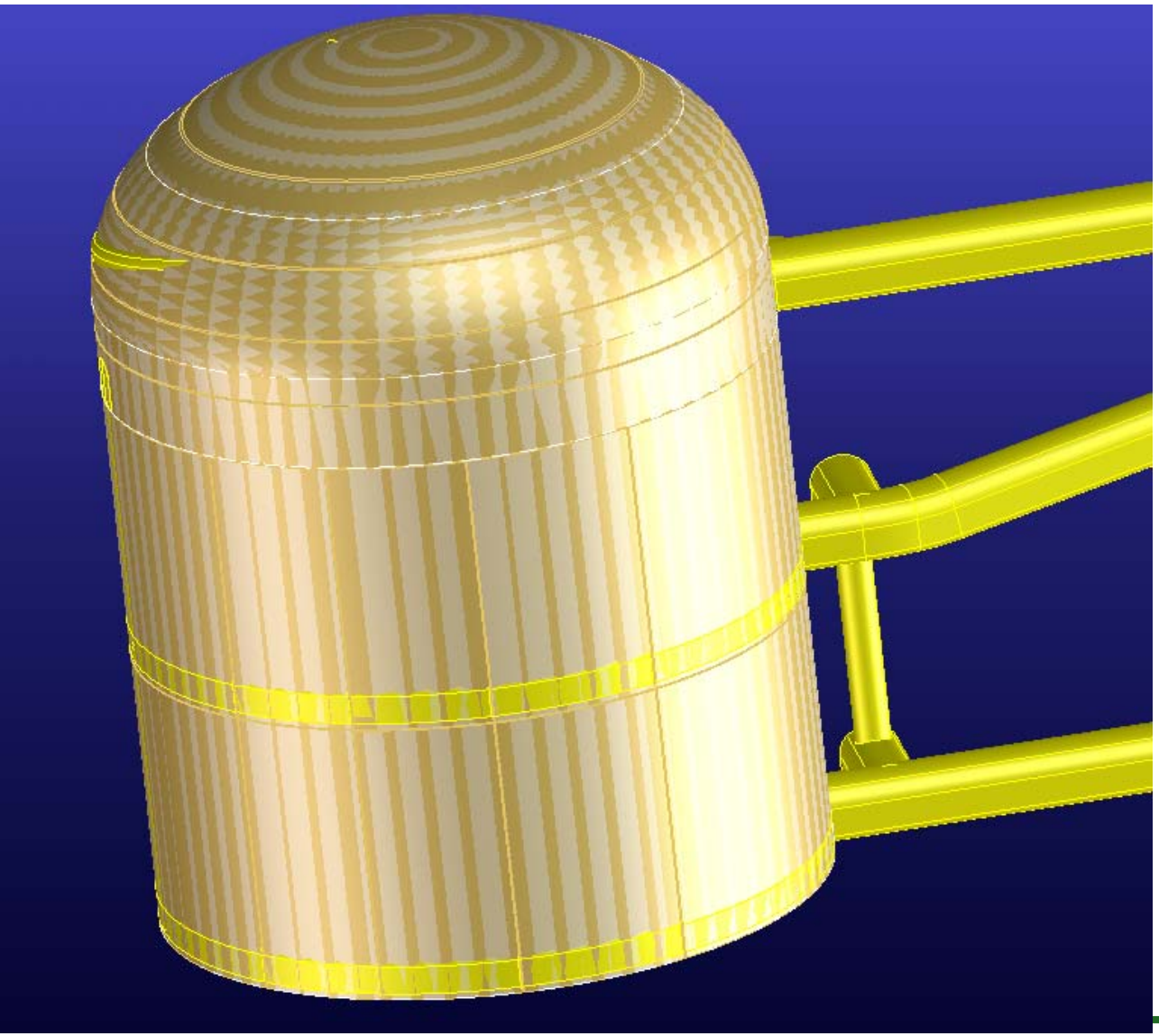

Large Cavity

- Development Completed
- Ready for Bulk Excavation

Bulk Excavation Method

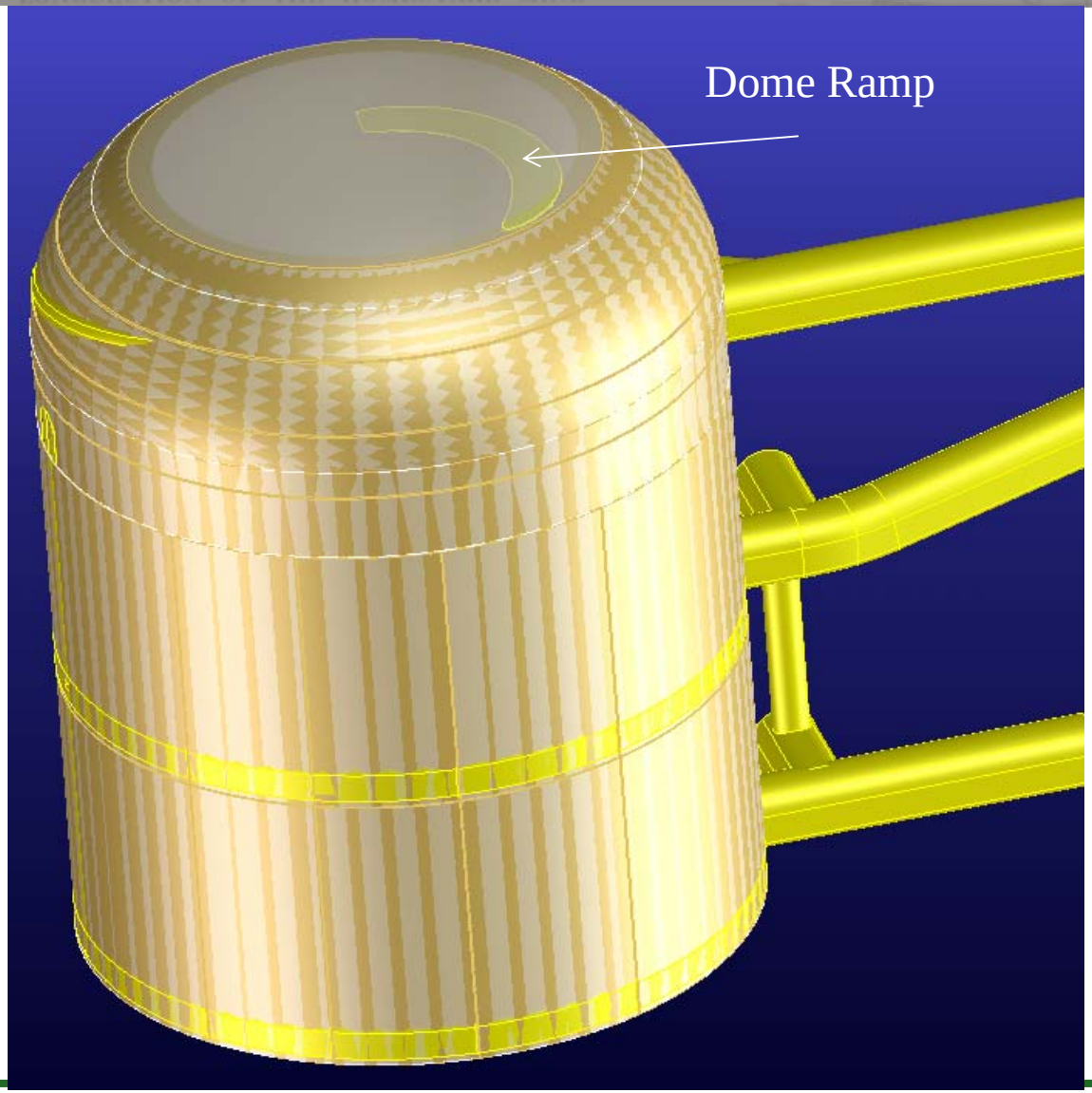

Bulk Excavation

Step 1

- Slash Top 15 ft of dome
  - Access and muck removal through Dome Ramp
  - Installation of Shotcrete and Cable Bolts

Bulk Excavation Method

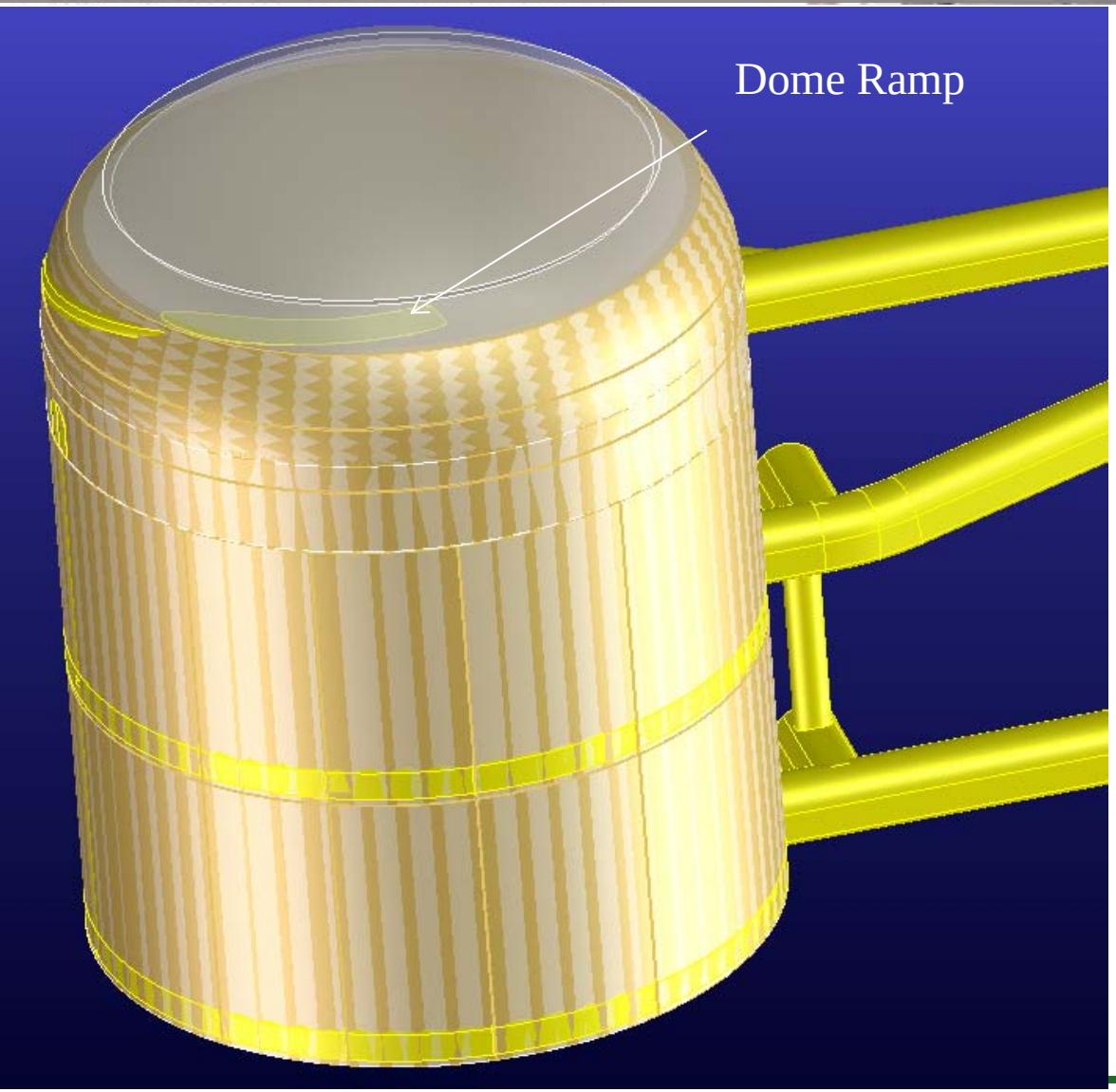

Bulk Excavation

Step 2

- Slash next 15 ft of dome
  - Access and muck removal through Dome Ramp
  - Installation of Shotcrete and Cable Bolts

Bulk Excavation Method

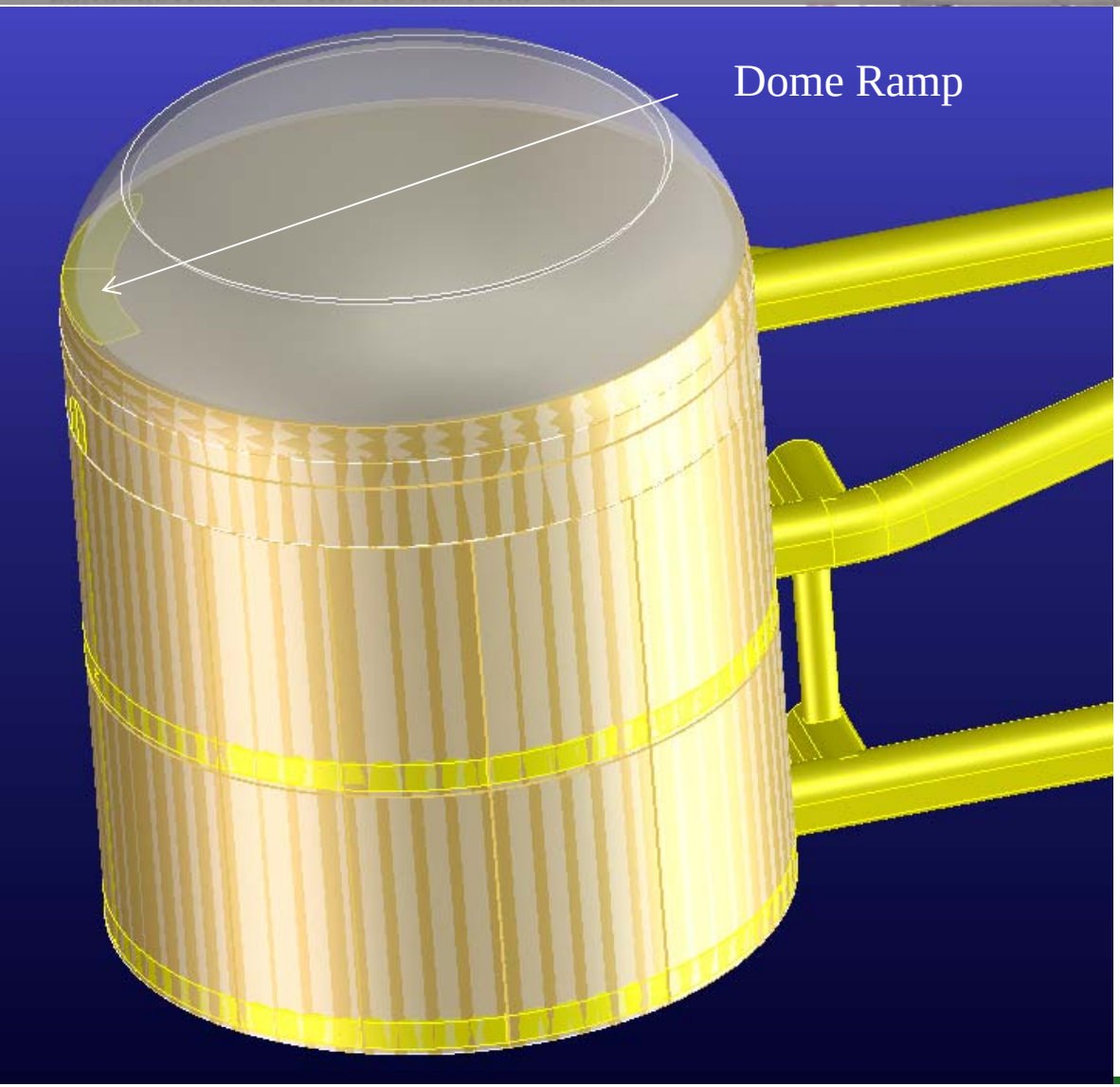

Bulk Excavation

Step 3

- Slash next 15 ft of dome
  - Access and muck removal through Dome Ramp
  - Installation of Shotcrete and Cable Bolts

Bulk Excavation Method

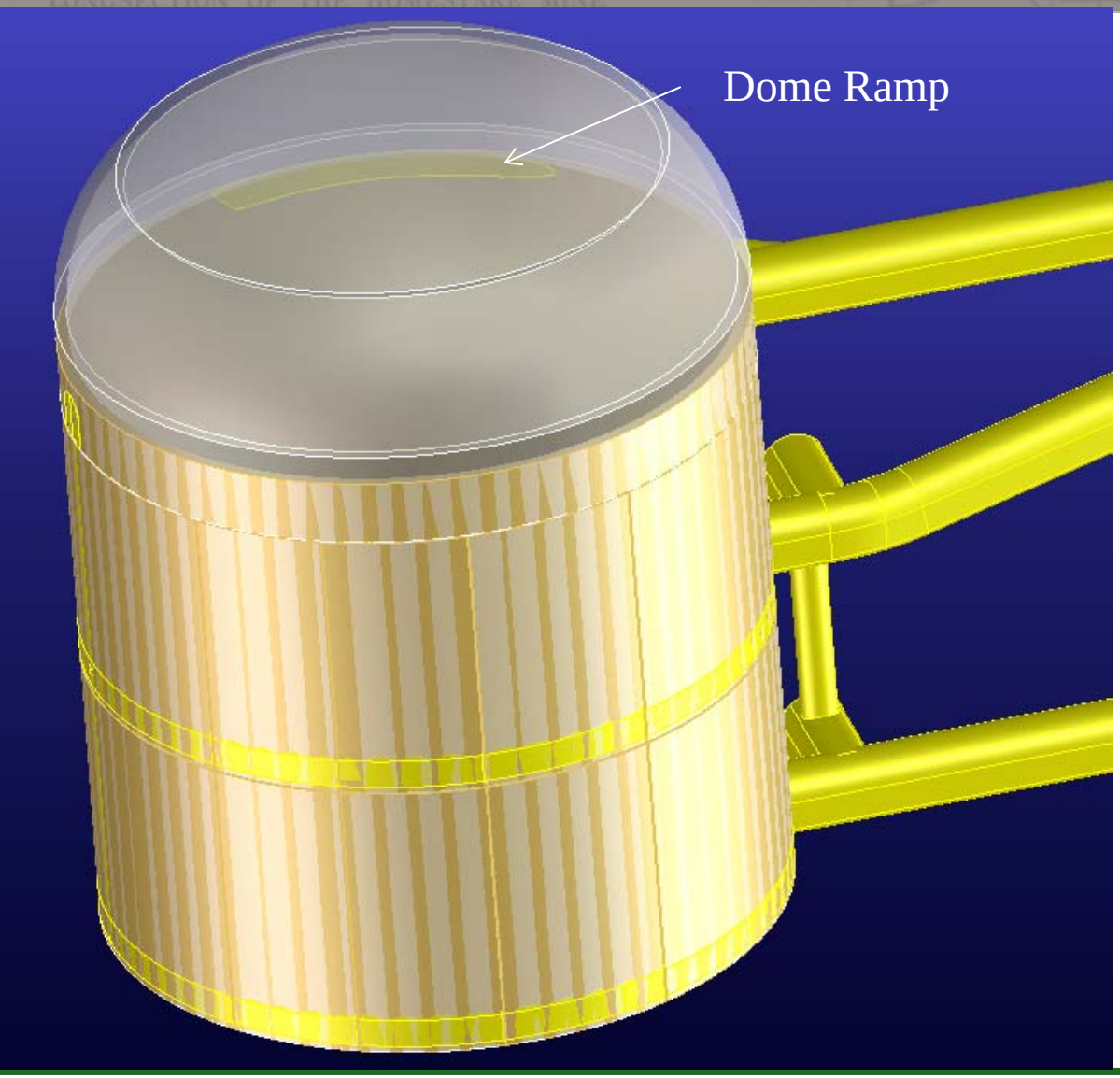

Bulk Excavation

Step 4

- Slash next 15 ft of dome
  - Access and muck removal through Dome Ramp
  - Installation of Shotcrete and Cable Bolts

4850 Level Large Cavity Excavation

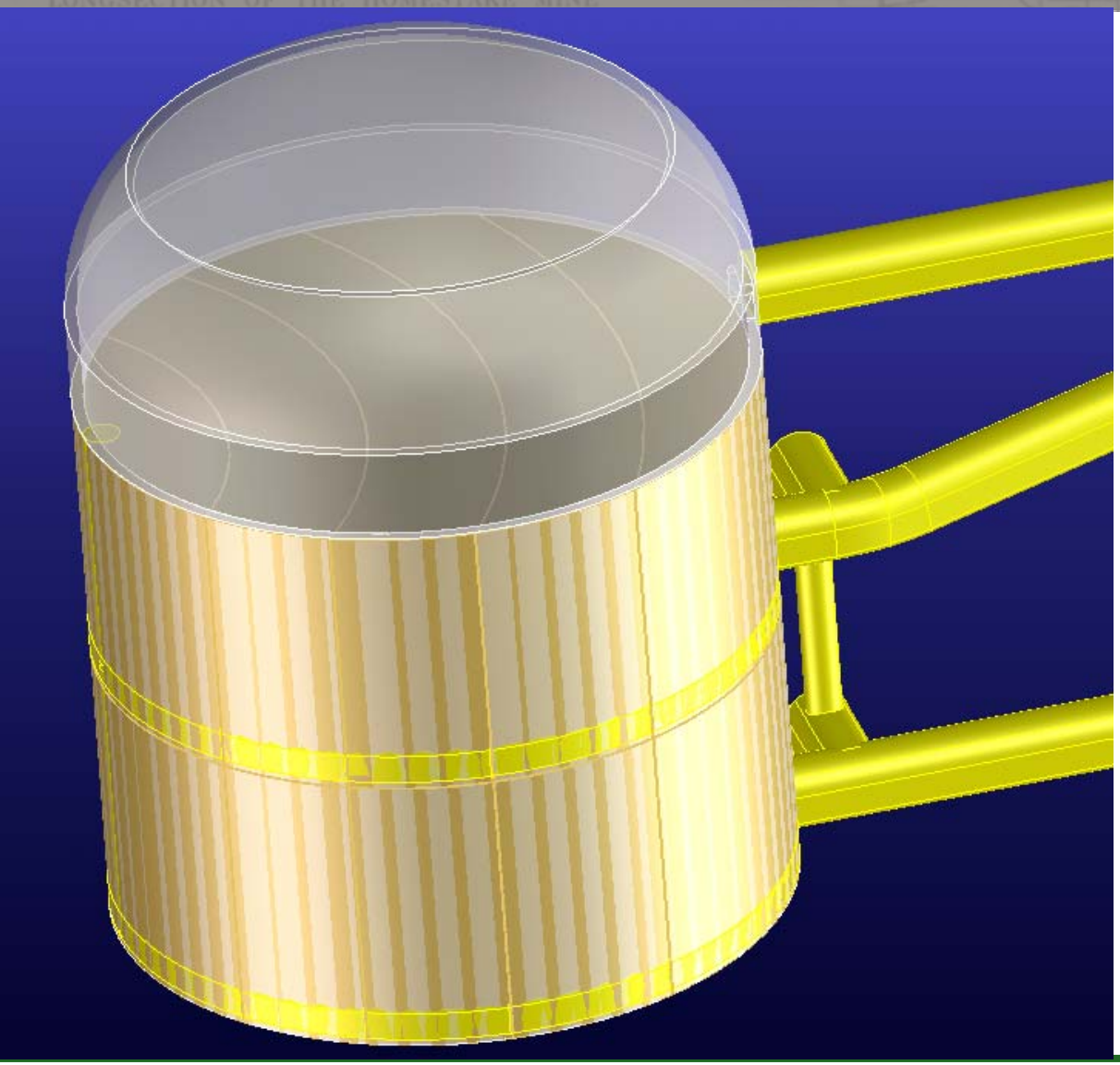

Bulk Excavation

Step 5

- Slash Top Access to full Cavity Diameter
  - Access and muck removal through 4850L
  - Installation of Shotcrete and Cable Bolts

4850 Level Large Cavity Excavation

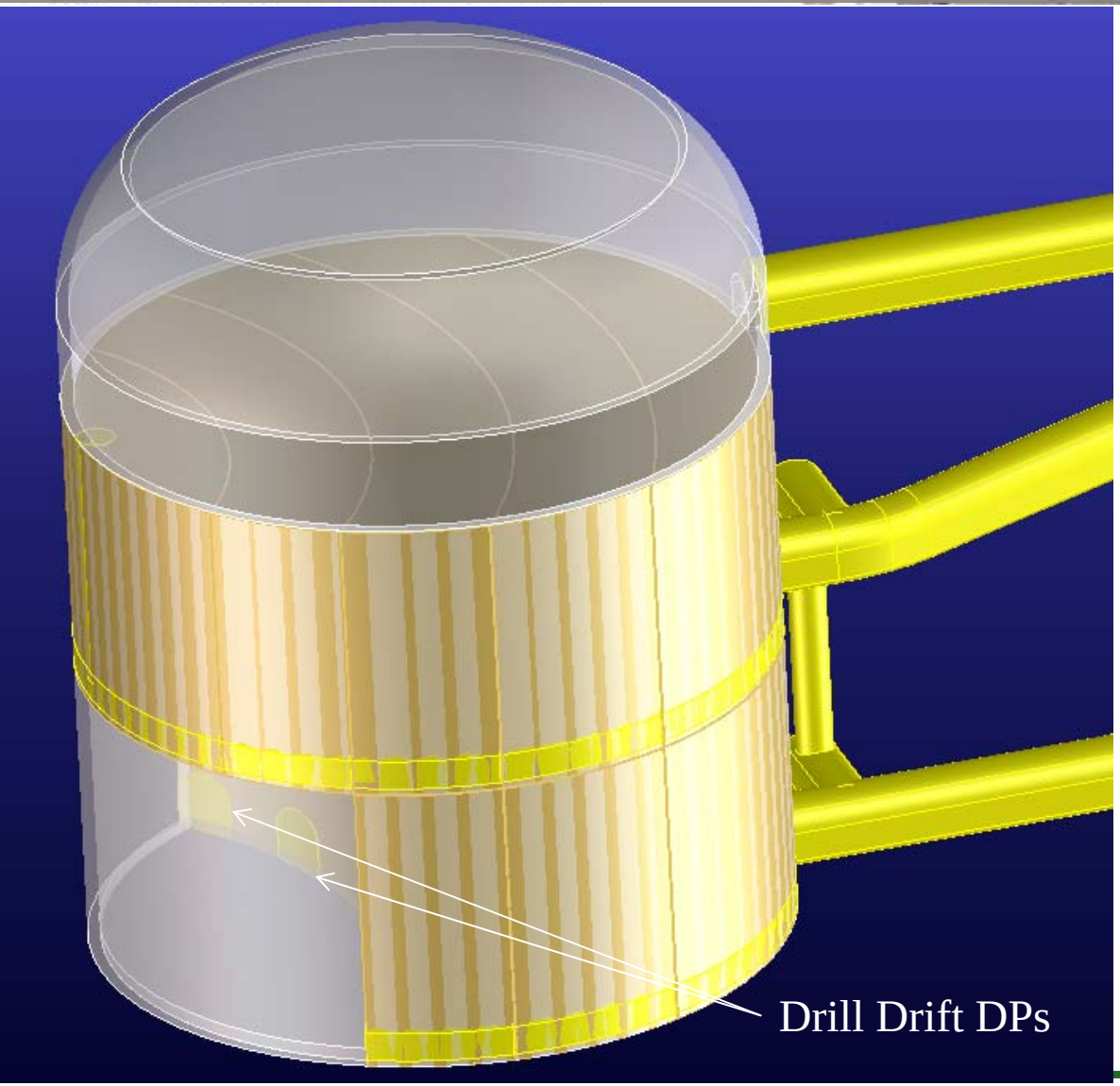

Bulk Excavation

Step 6

- Drill and Blast Long Holes between 5000L and 4925L
  - Muck removal through 5000L
  - Drill Drifts on 5000L act as draw points
  - Draw only as much waste rock as is required to make room for the next blast
  - Broken rock provides temporary support

Bulk Excavation Method

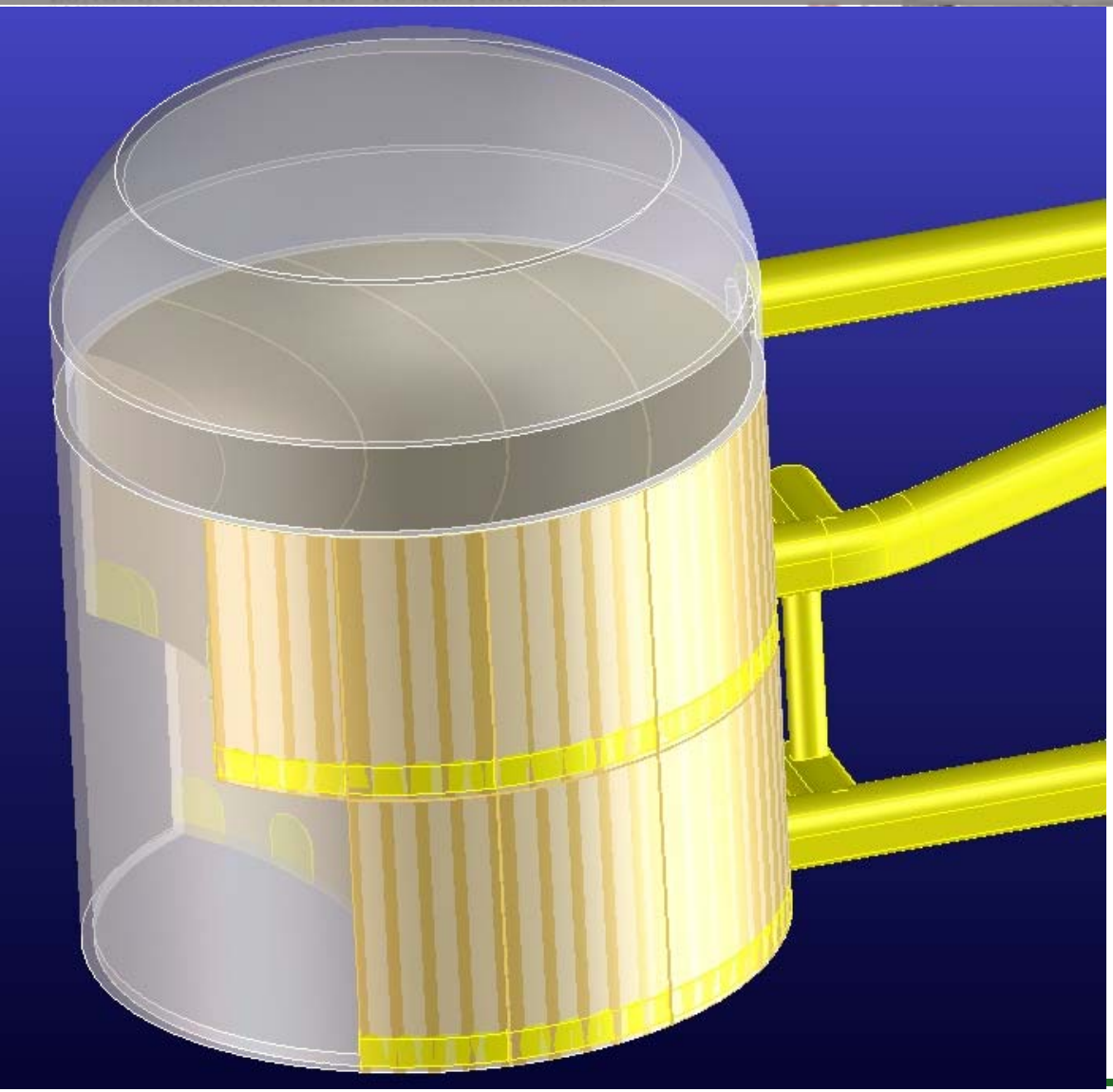

Bulk Excavation

Step 7

- Drill and Blast Long Holes between 4925L and 4850L
  - Muck removal through 5000L
  - Drill Drifts on 5000L act as draw points
  - Draw only as much waste rock as is required to make room for the next blast
  - Broken rock provides temporary support

Bulk Excavation Method

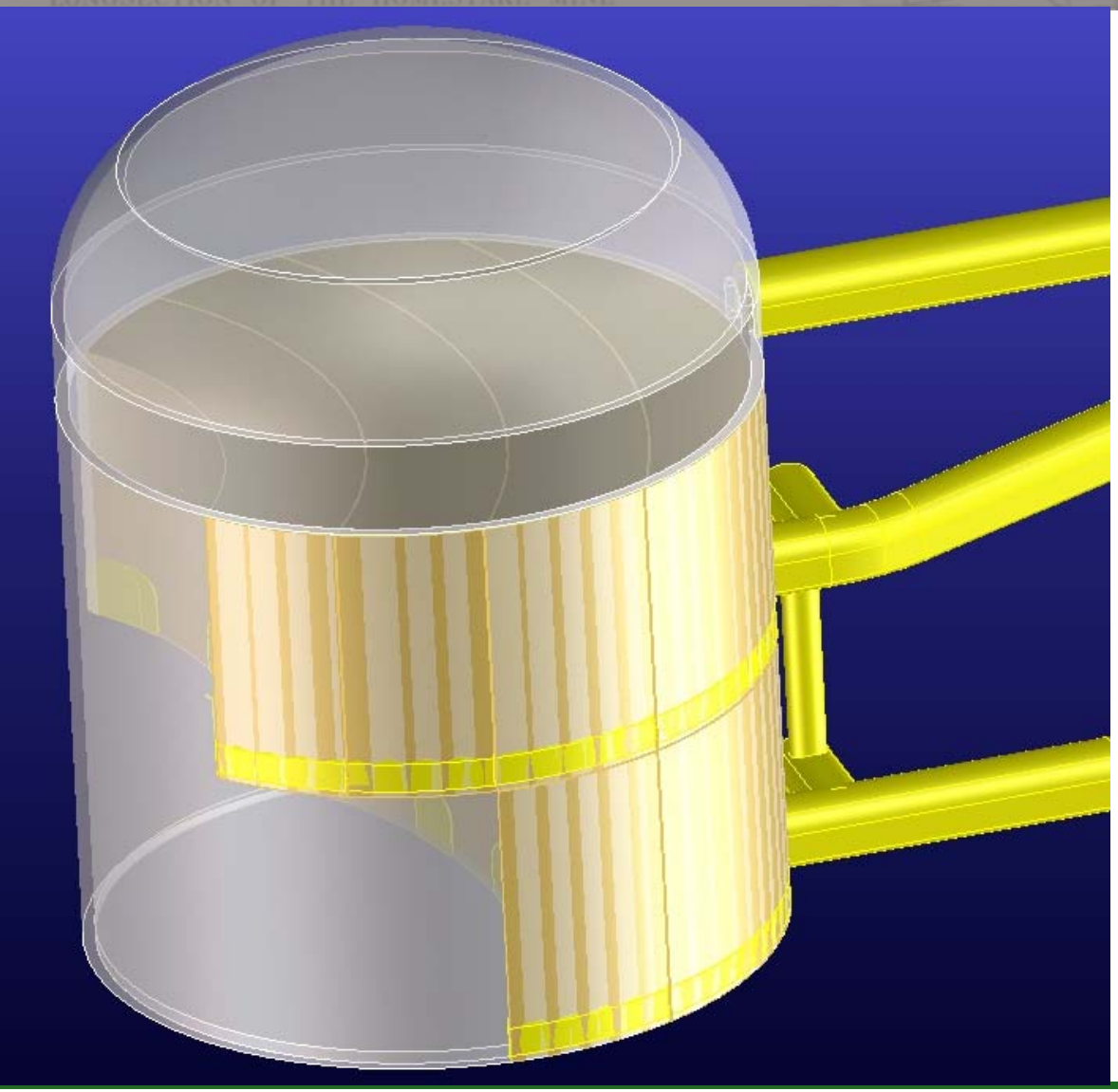

Bulk Excavation

Step 8

- Drill and Blast Long Holes between 5000L and 4925L
  - Muck removal through 5000L
  - Drill Drifts on 5000L act as draw points
  - Draw only as much waste rock as is required to make room for the next blast
  - Broken rock provides temporary support

Bulk Excavation Method

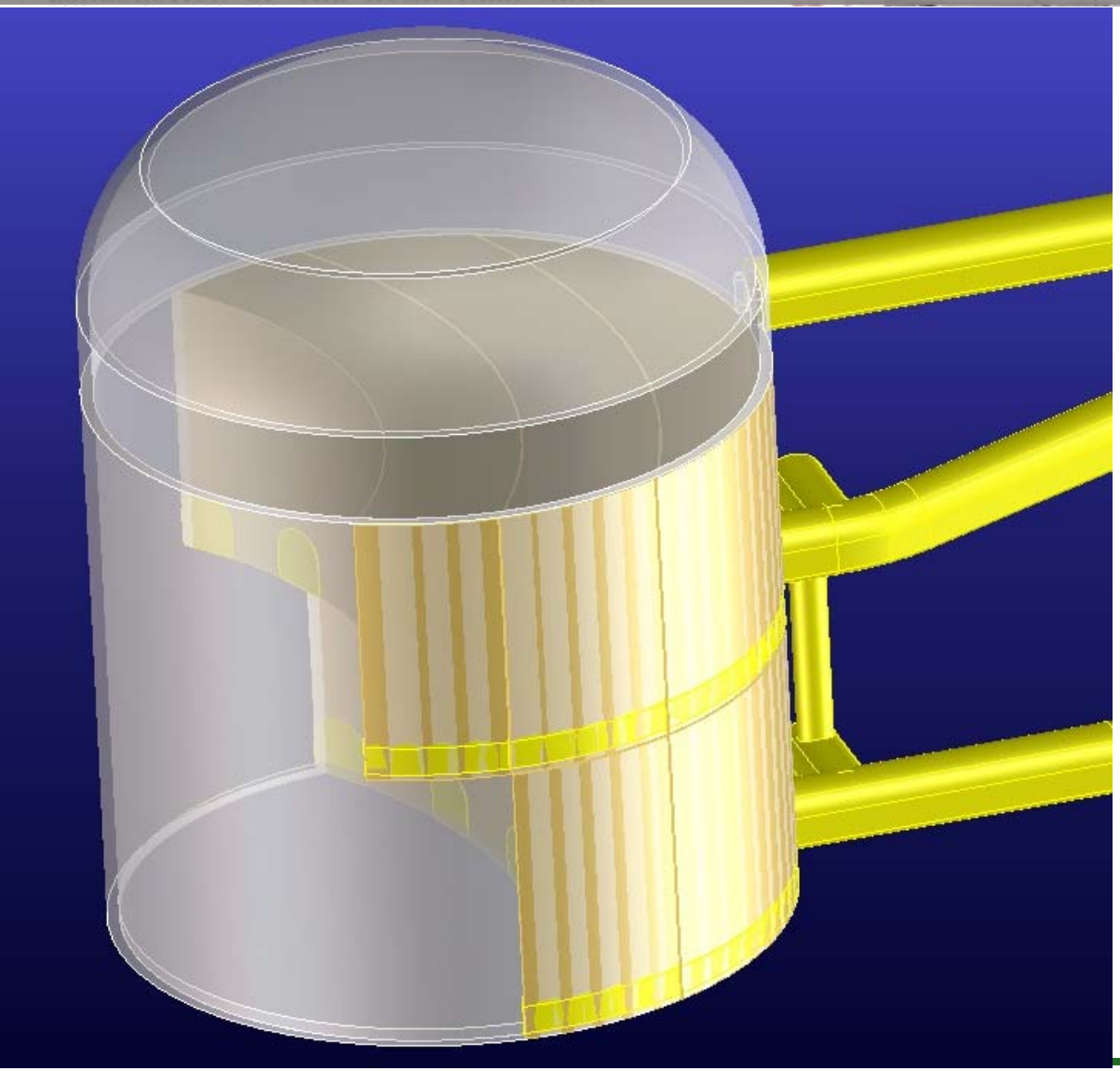

Bulk Excavation

Step 9

- Drill and Blast Long Holes between 4925L and 4850L
  - Muck removal through 5000L
  - Drill Drifts on 5000L act as draw points
  - Draw only as much waste rock as is required to make room for the next blast
  - Broken rock provides temporary support

Bulk Excavation Method

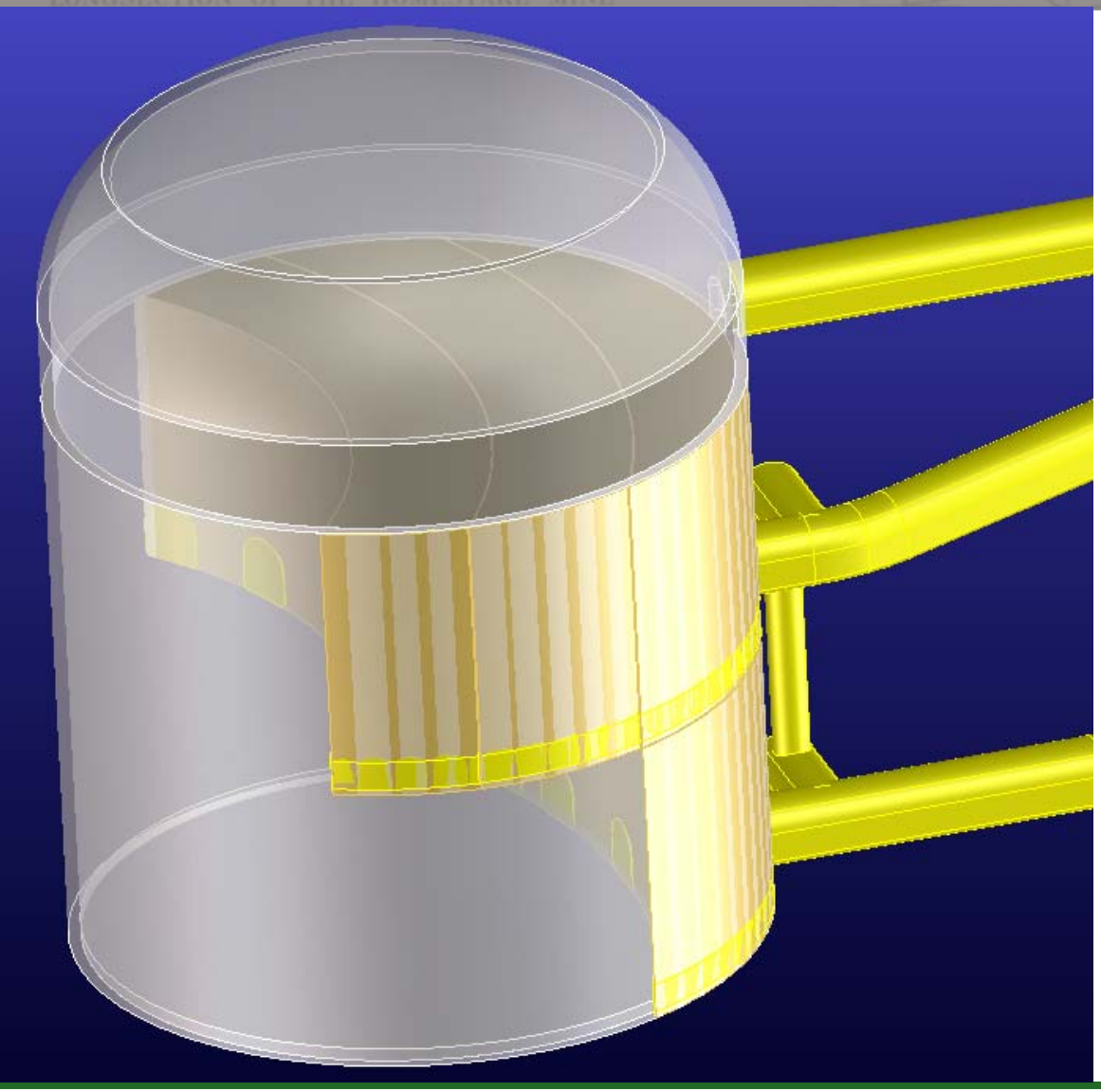

Bulk Excavation

Step 10

- Drill and Blast Long Holes between 5000L and 4925L
  - Muck removal through 5000L
  - Drill Drifts on 5000L act as draw points
  - Draw only as much waste rock as is required to make room for the next blast
  - Broken rock provides temporary support

Bulk Excavation Method

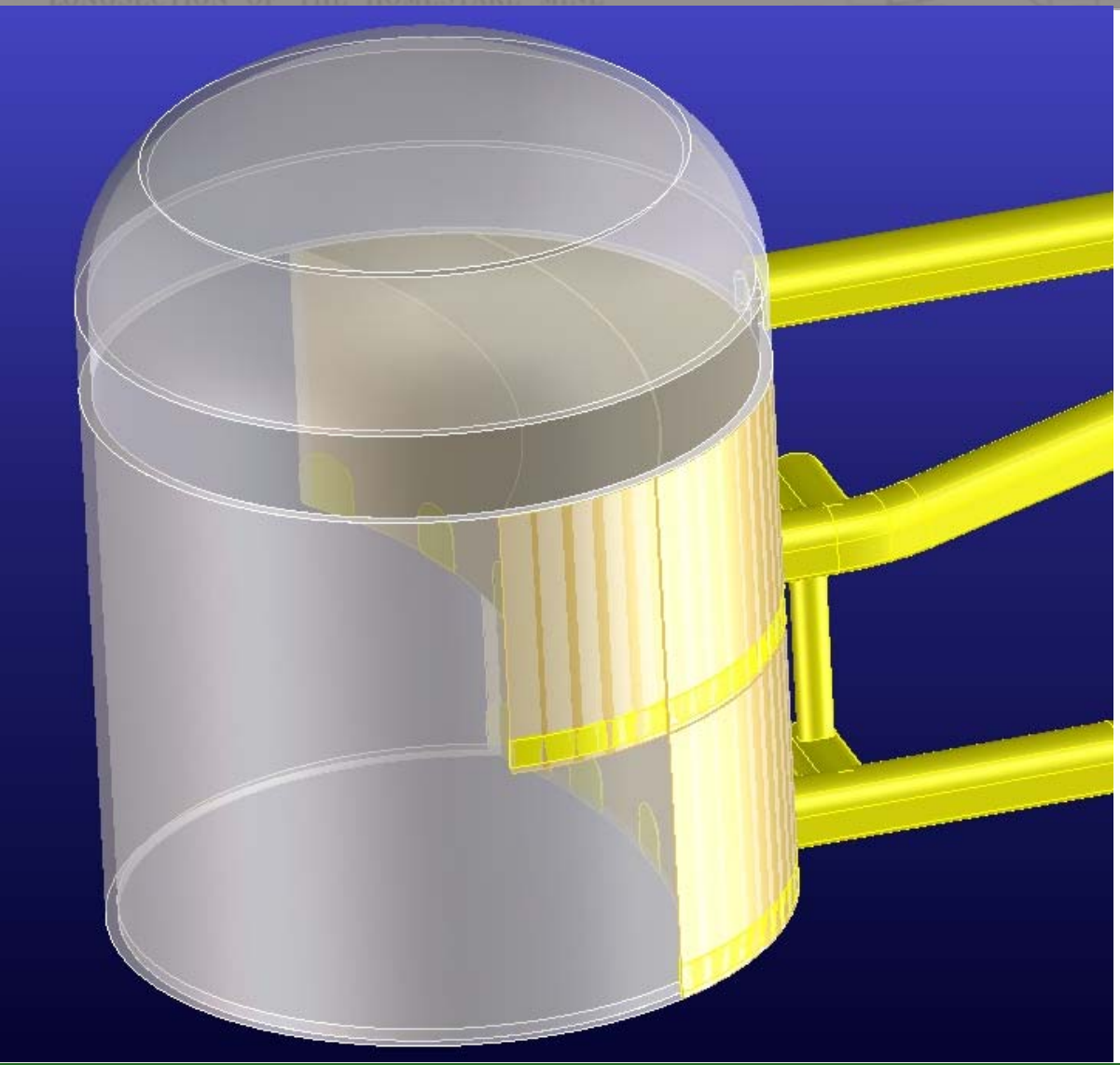

Bulk Excavation

Step 11

- Drill and Blast Long Holes between 4925L and 4850L
  - Muck removal through 5000L
  - Drill Drifts on 5000L act as draw points
  - Draw only as much waste rock as is required to make room for the next blast
  - Broken rock provides temporary support

Bulk Excavation Method

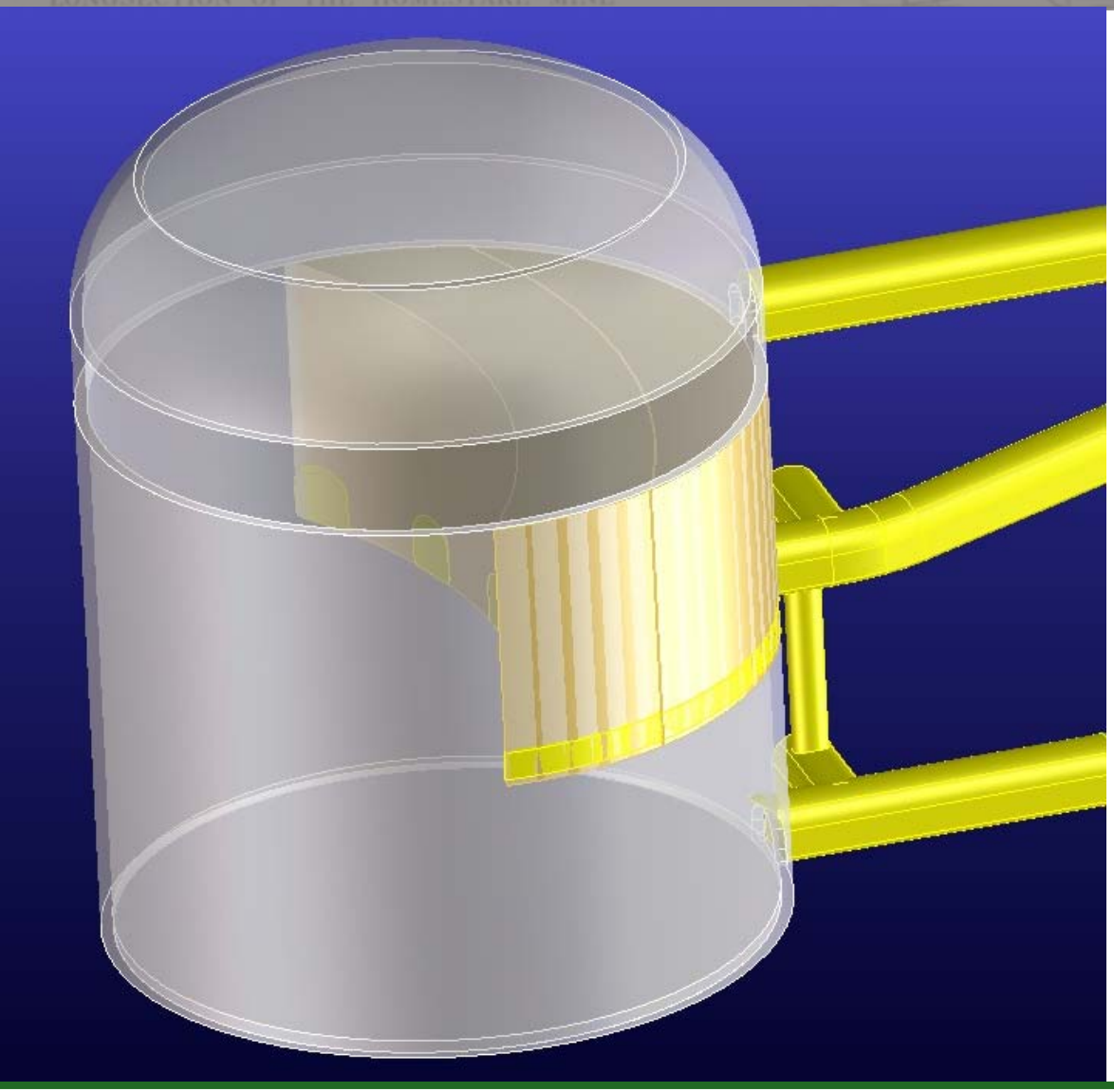

Bulk Excavation

Step 12

- Drill and Blast Long Holes between 5000L and 4925L
  - Muck removal through 5000L
  - Drill Drifts on 5000L act as draw points
  - Draw only as much waste rock as is required to make room for the next blast
  - Broken rock provides temporary support

Bulk Excavation Method

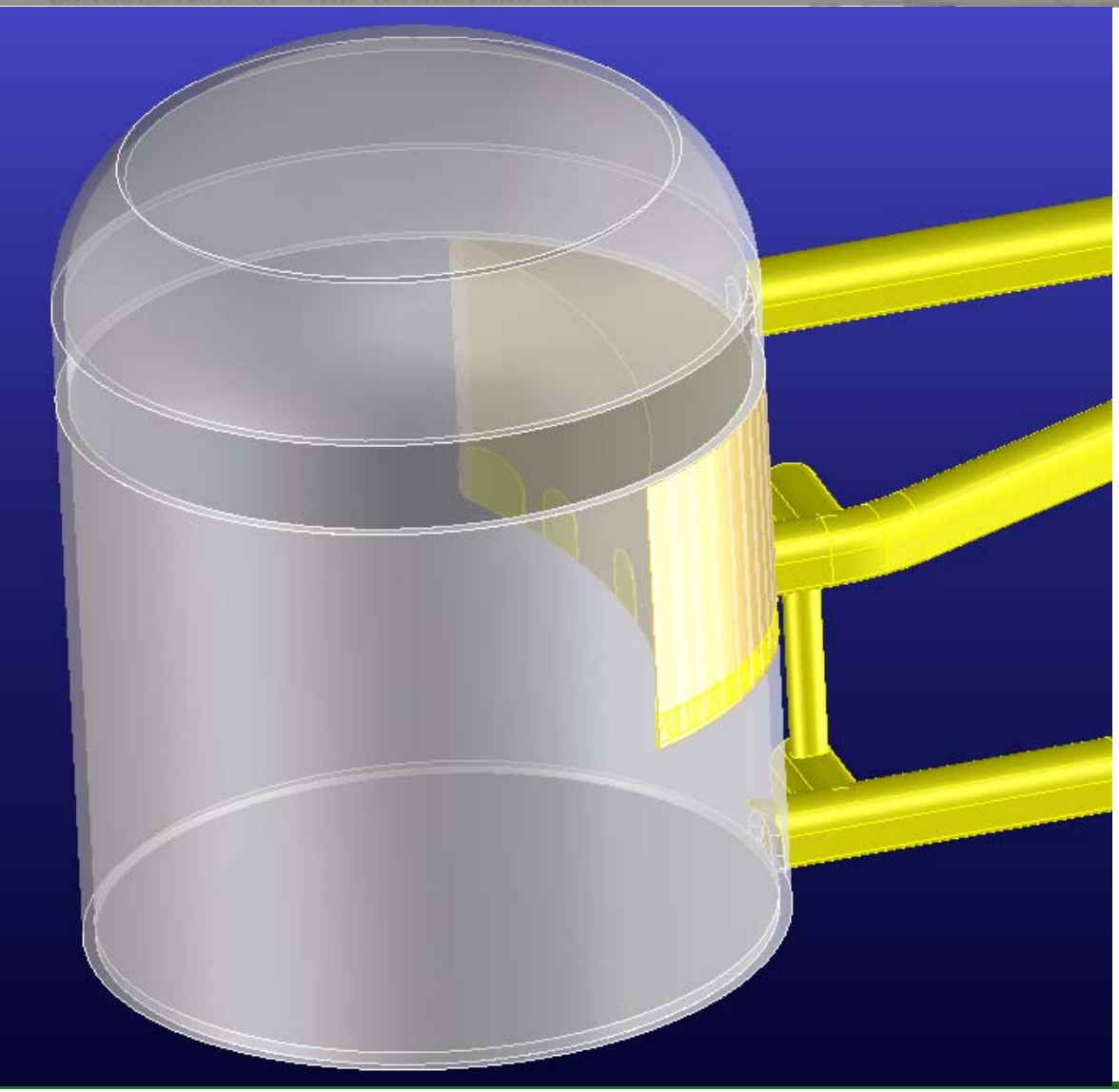

Bulk Excavation

Step 13

- Drill and Blast Long Holes between 4925L and 4850L
  - Muck removal through 5000L
  - Drill Drifts on 5000L act as draw points
  - Draw only as much waste rock as is required to make room for the next blast
  - Broken rock provides temporary support

Bulk Excavation Method

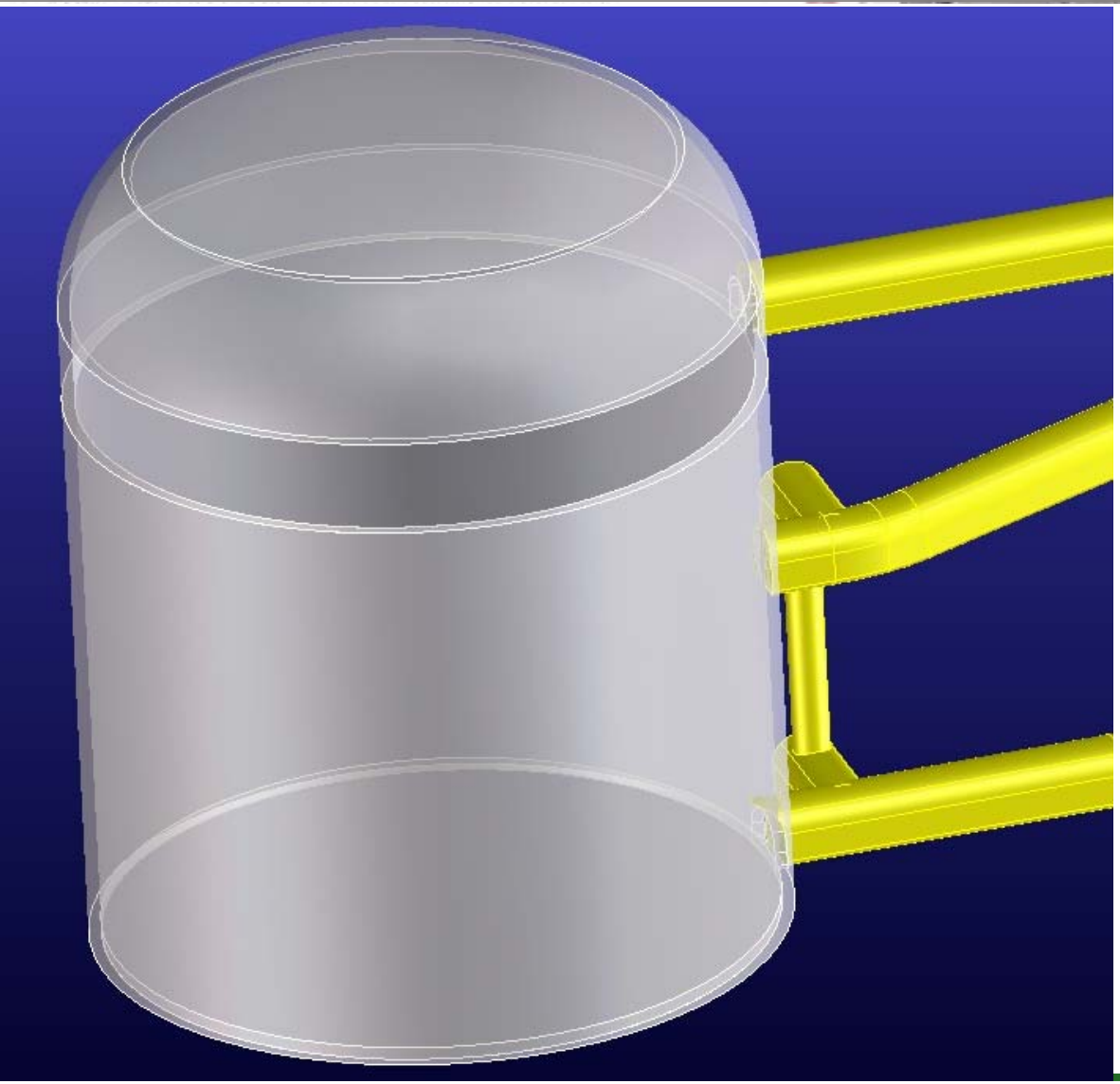

Bulk Excavation

Step 14

- Drill and Blast Long remaining Holes between 4925L and 4850L
  - Muck removal through 5000L
  - Drill Drifts on 5000L act as draw points
  - Draw only as much waste rock as is required to make room for access on broken rock at 4850L for Crane installation
  - Install Crane at 4850L
  - Install Shotcrete and Cable Bolts off of broken rock
  - Draw down broken rock from 5000L as required to allow for continued installation of required ground support

Excavation Option Comparison

1. Benching Method

Pros

- Well Established Method
- Good Access for Equipment with Spiral Ramp and Accesses
- Ground Support Installed close to excavation

Cons

- Crane is installed prior to the completion of Blasting – Risk of Damage
- Losses due to inefficiencies relating to changing work cycles
- Multiple Hydrostatic Bulkheads (7) required at Access points
- Ledges or steps formed in walls due to benching method

Excavation Option Comparison

SNO Lab

- Excavated using Benching Method
- Crane Installed prior to completion of Blasting – Damage resulted
- Ledges formed along walls

Excavation Option Comparison

2. Bulk Excavation Method

Pros

- Well Established Method
- Productive Excavation Method – Long Hole Drilling and Blasting
- Crane Installed after blasting is complete – no damage
- Smooth walls with minimal over break – Presplitting
  - Fewer ledges due to longer holes
  - Perimeter Drifts provide opportunity to check hole breakthrough locations prior to blasting. Allows for re-drilling if necessary
- More consistent work cycles
- Broken Waste Rock providing temporary support
- Only 2 Hydrostatic Bulkheads required

Cons

- Equipment captive during final ground support installation and waste rock removal
- More Development Required with Sublevels at 4925L and 5000L

Large Cavity Design Issues

1. Funding to Support Design
2. Geotechnical Data Collection
   - Determination of Optimum Cavern Location
   - Ground Support Design
     - Pre Excavation
     - Post Excavation
   - De-stressing determination if required
3. Determination of Optimum Excavation Option
4. Liner Determination
   - Shotcrete vs Concrete
   - Interface between Rock/Liner (Geotextile?)
   - Water Inflow Control Systems

Large Cavity Design Issues

5. Scientific Requirements to Determine
   - Excavation Volume
   - Excavations for Support Equipment and Storage
   - Facility Infrastructure Support and Utilities
     - Access
     - Electrical
     - Ventilation
     - Material Handling
     - Flooring
6. Crane Requirements
   - Required for Construction as well as Lab Operation
   - Consider Construction and Lab Operations Requirements in Determination of Final Design
7. Hydrostatic Bulkheads
   - Required at all locations where Accesses Intersect Cavity