Designing the TPC of the 5 killo-tone Next Generation Liquid Argon Detector (NGLArD)

Hanguo Wang

UCLA

Feb 28 2009 @ UC Davis

Design considerations (5kt and beyond)

1. What is the minimum module size acceptable for physics?
2. Integrated TPC with cryostat design?
3. Integrated cooling?
4. Integrated purification?
5. No special requirement for cavern design?
   Except simply require a size of 20m x 20m x 50m
6. Relaxed requirement for shaft size and weight capacity?
7. Can Neutrino beam come from any direction?
8. Evacuated Vacuum Insulated Cryostat?
9. ….

The ICARUS T600

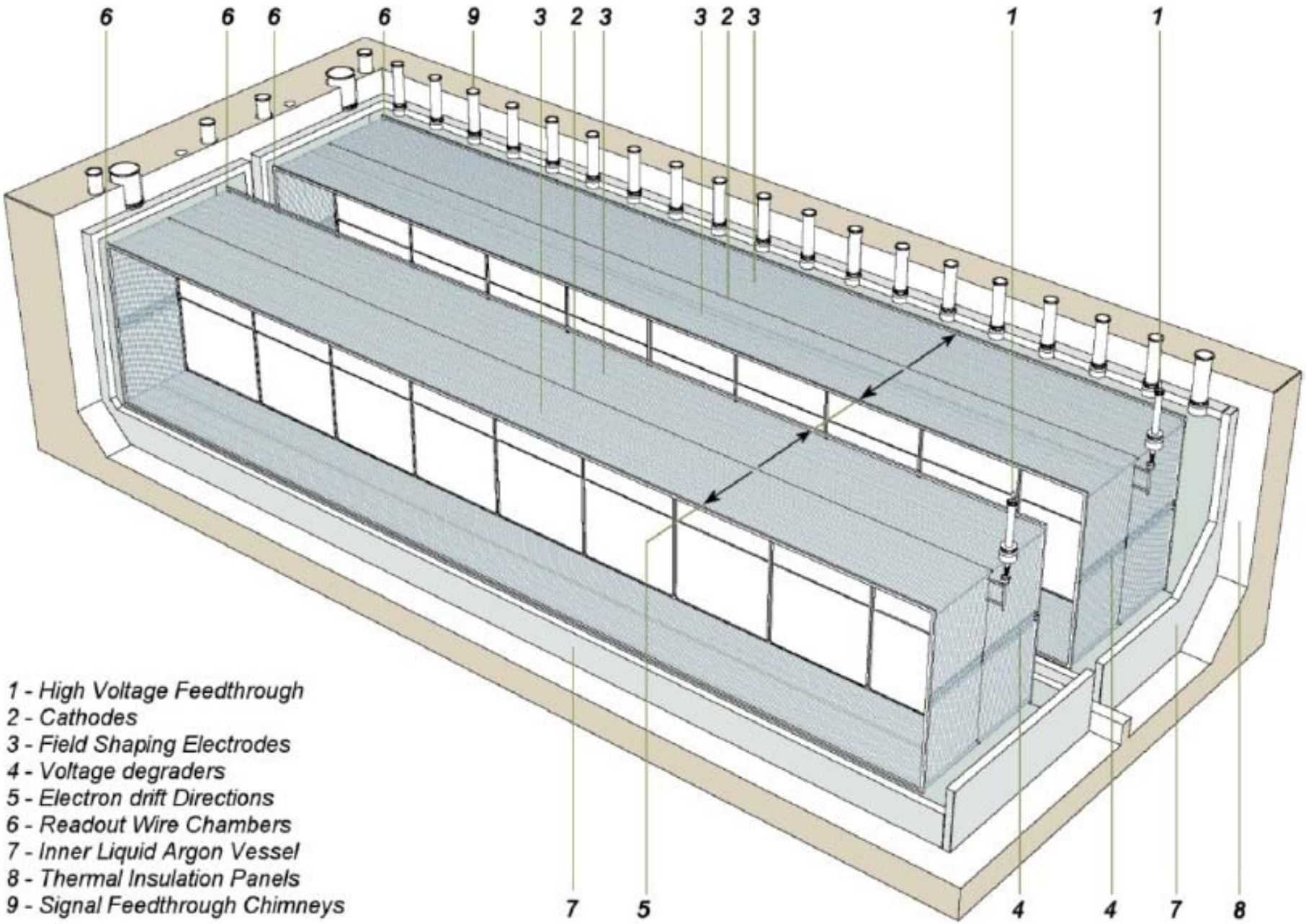

ArgoNeuT and Planned MicroBooNe

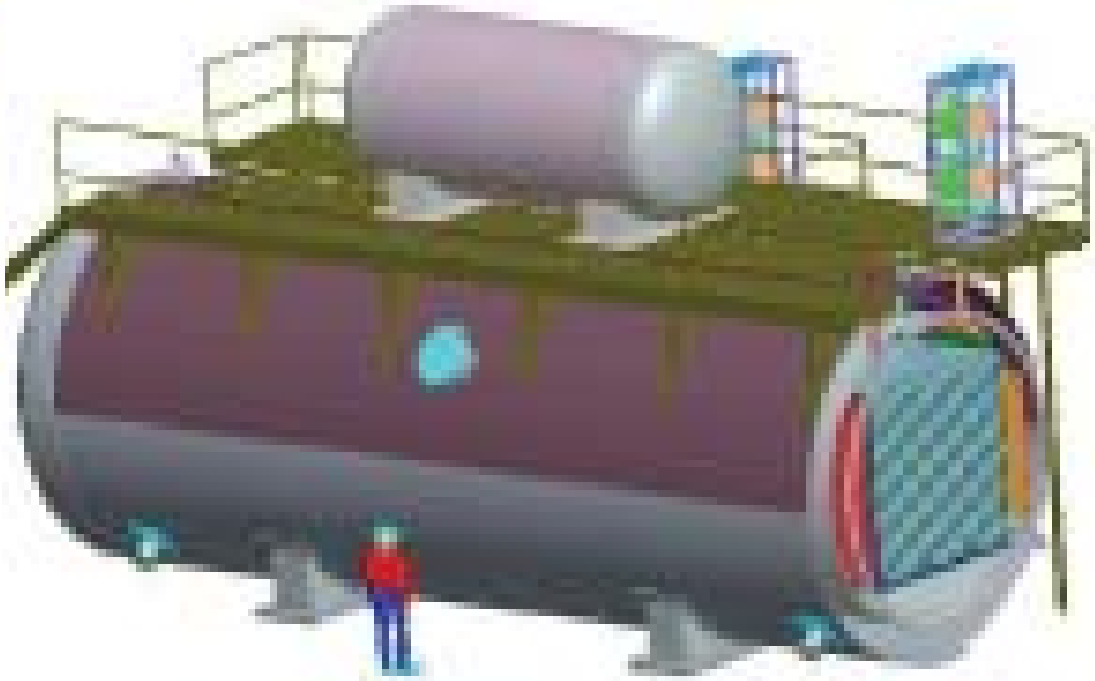

How to go from here to 5kt --> 30kt

A 100 kton liquid Argon TPC detector

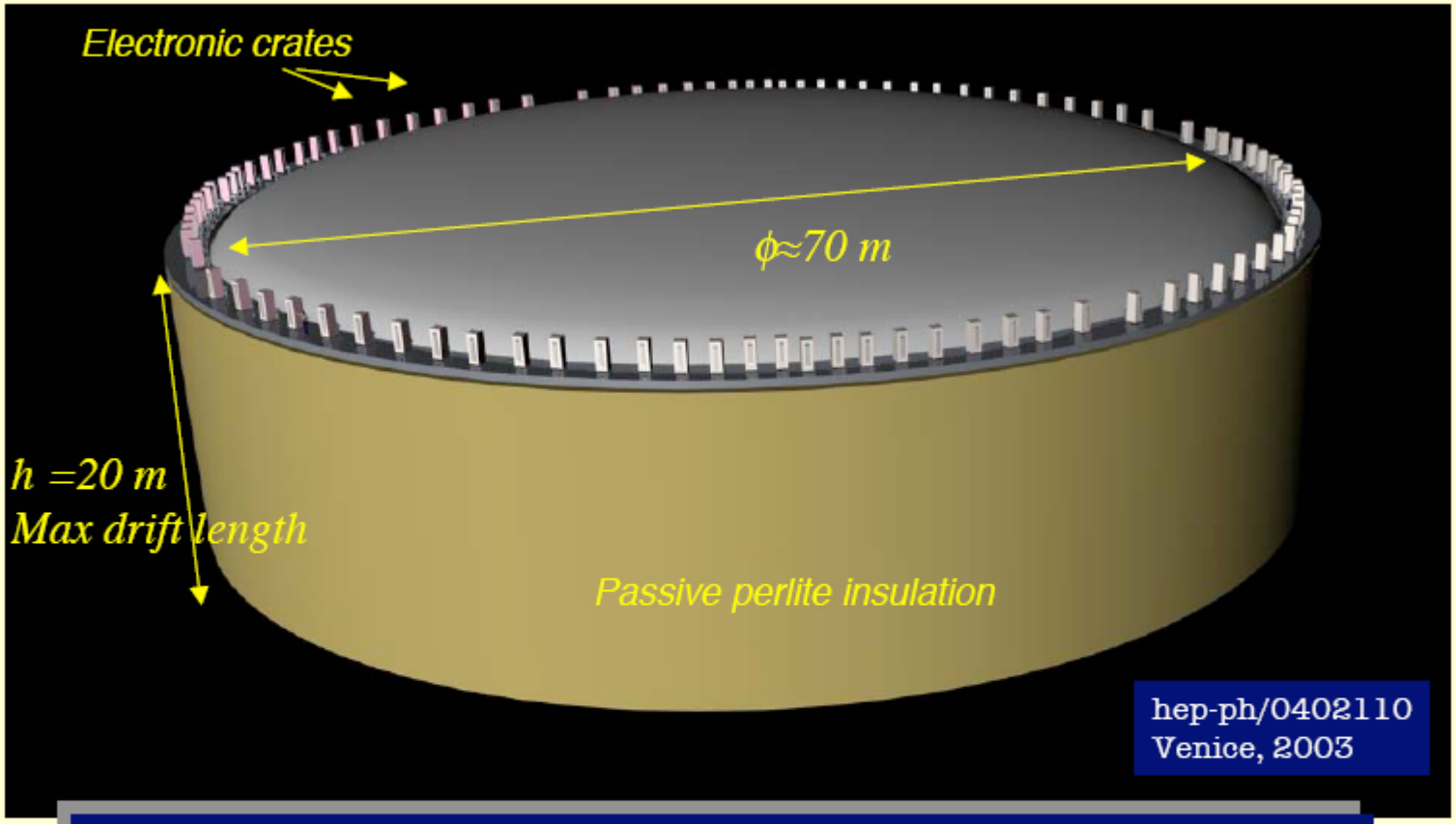

Single module cryo-tanker based on industrial LNG technology

A "general-purpose" detector for superbeams, beta-beams and neutrino factories with broad non-accelerator physics program (SN ν, p-decay, atm ν, …)

A dream come true?

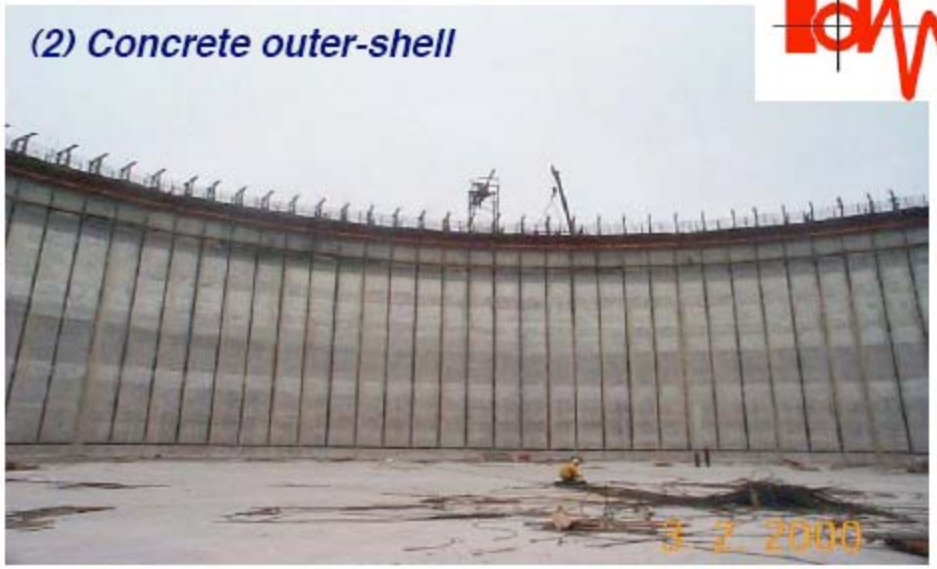

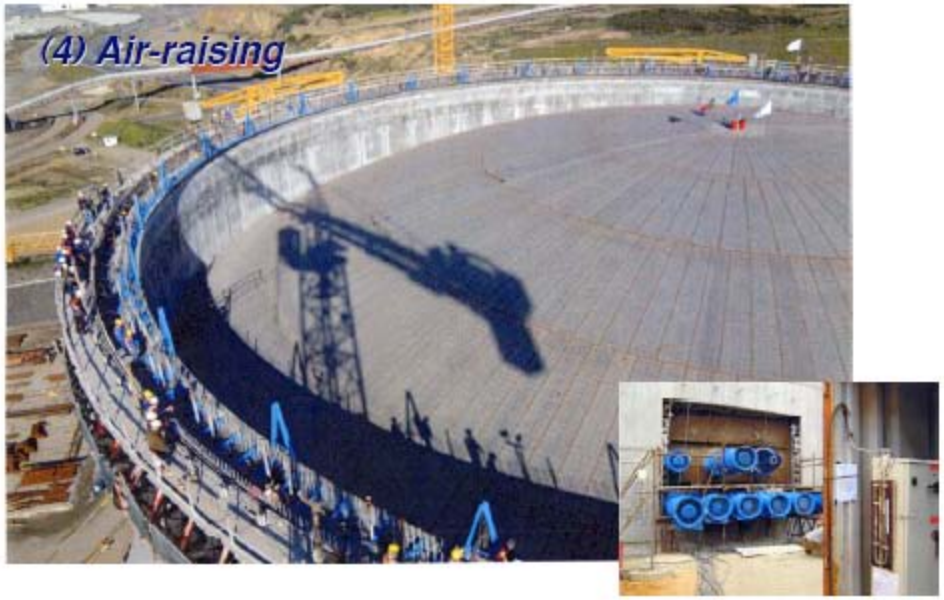

Large Single Tank system

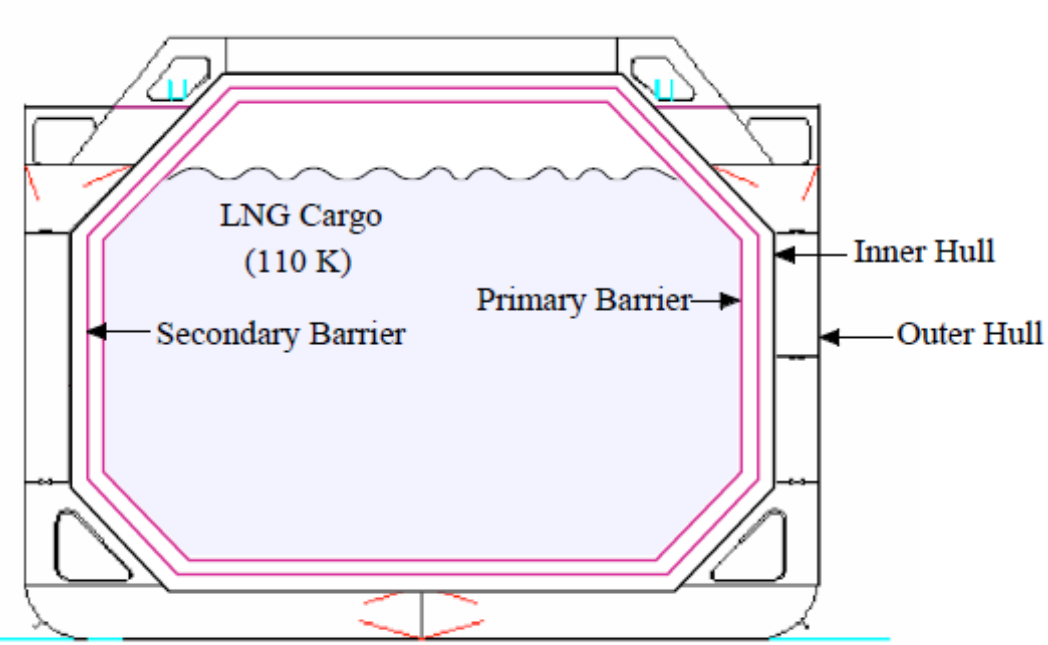

Fig. 2 Membrane LNG tanker design fundamentals

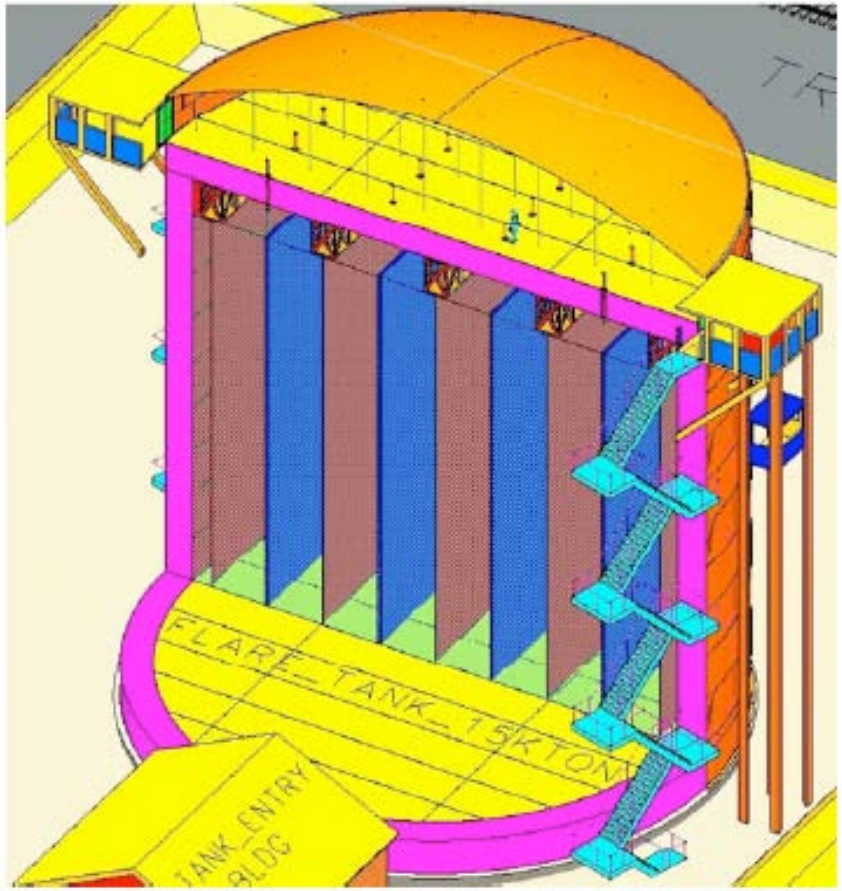

Fig. 1 Section of a 15kT LarTPC, showing the wires planes and the insulation (violet) sandwiched between an inner and outer tank.

Carl Bromberg

Figuring out a large vessel design

Initial evacuation problem

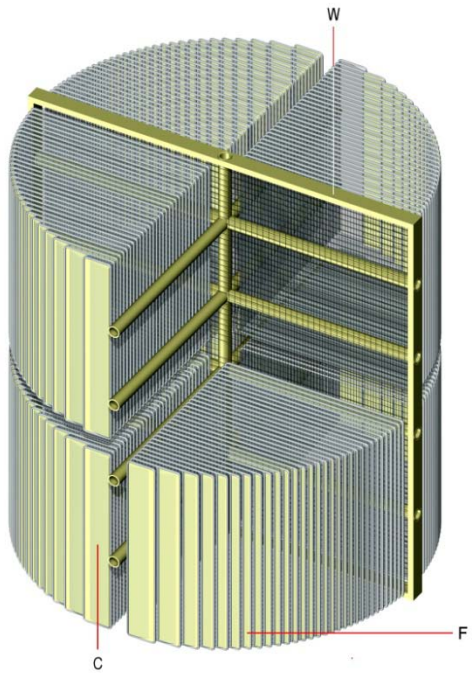

The inside detector, with one of the top quarters not shown.
W: wire chambers;
F: field-shaping electrodes;
C: cathodes.
The inner reinforcing cross is also indicated.

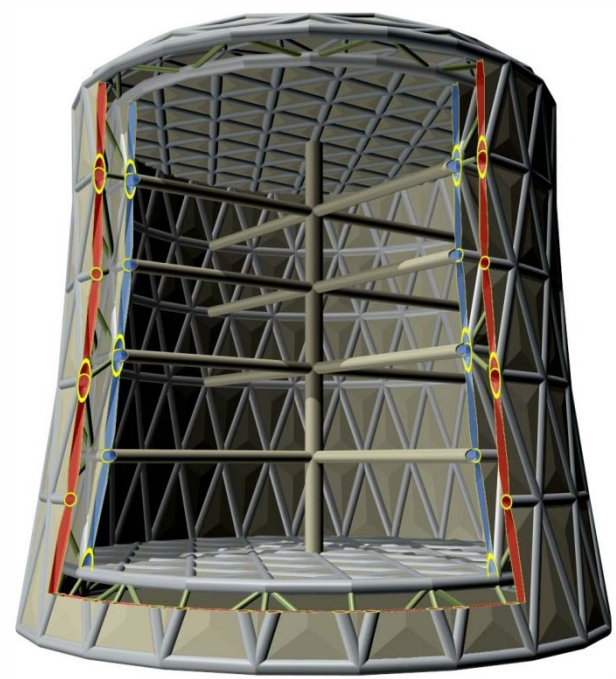

Cutaway view of the proposed cryostat design. The inner cross-structure is indicated for an eventual increase of the inner vessel rigidity

F. Sergiampietri

The LANNDD Concept 1

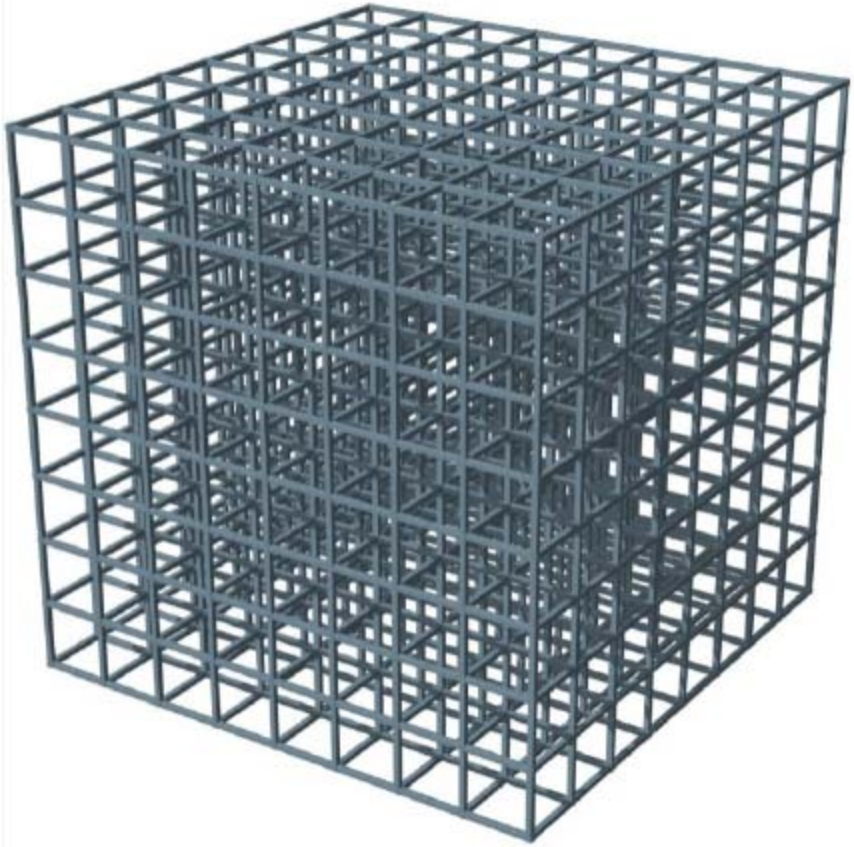

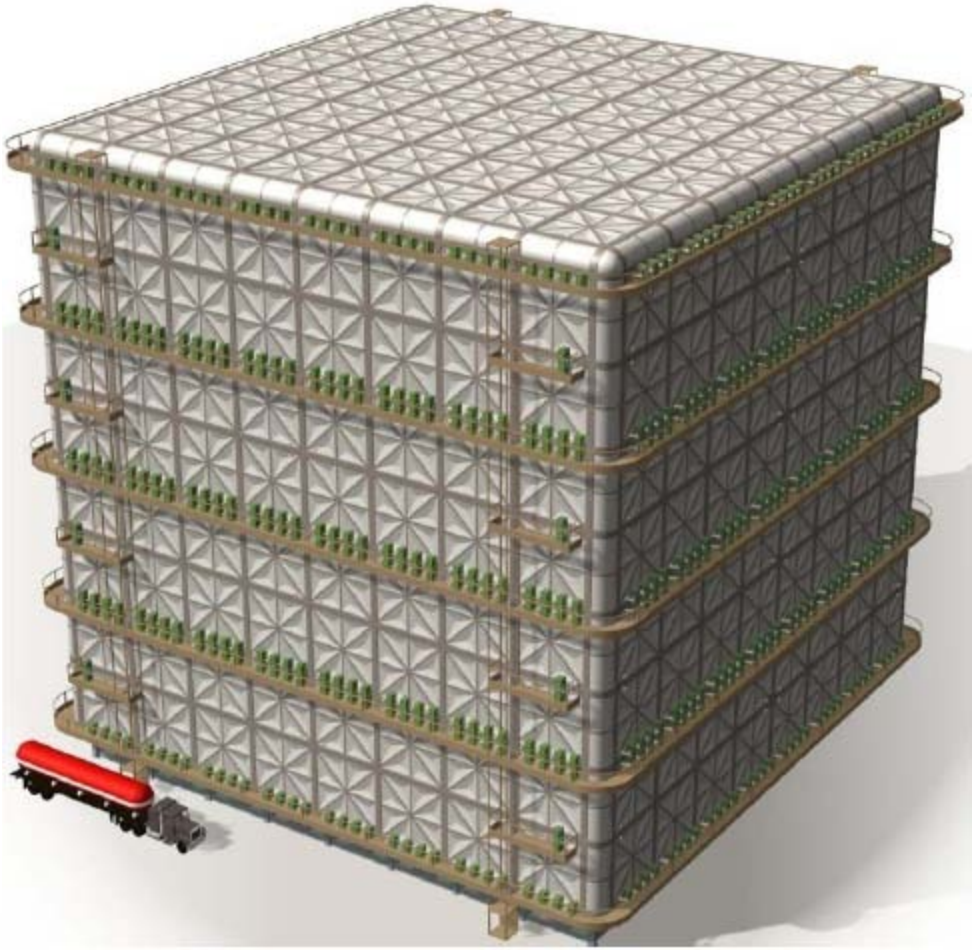

DB Cline, F Sergiampietri

Study of a scalable in mass LANNDD detector

For the construction of very high mass detector for natural and artificial neutrino physics and nucleon decay physics, we have studied a solution that allows a continuous (not segmented) active LAr volume (high fiducial volume) contained in a cryostat based in a multi-cell mechanical structure.

This solution allows a cubic shape composed by n^3 cells, 5m×5mω5m in size each.

The required mass is obtained not by magnifying the detector, but by increasing the number of cells.

The full study is published in JINST:

David. B. Cline, Fabrizio Raffaelli and Franco Sergiampietri
LANNDD – A line of liquid argon TPC detectors scalable in mass from 200 Tons to 100 Ktons
2006 JINST **1** T09001
http://www.iop.org/EJ/1748-0221/09/T09001

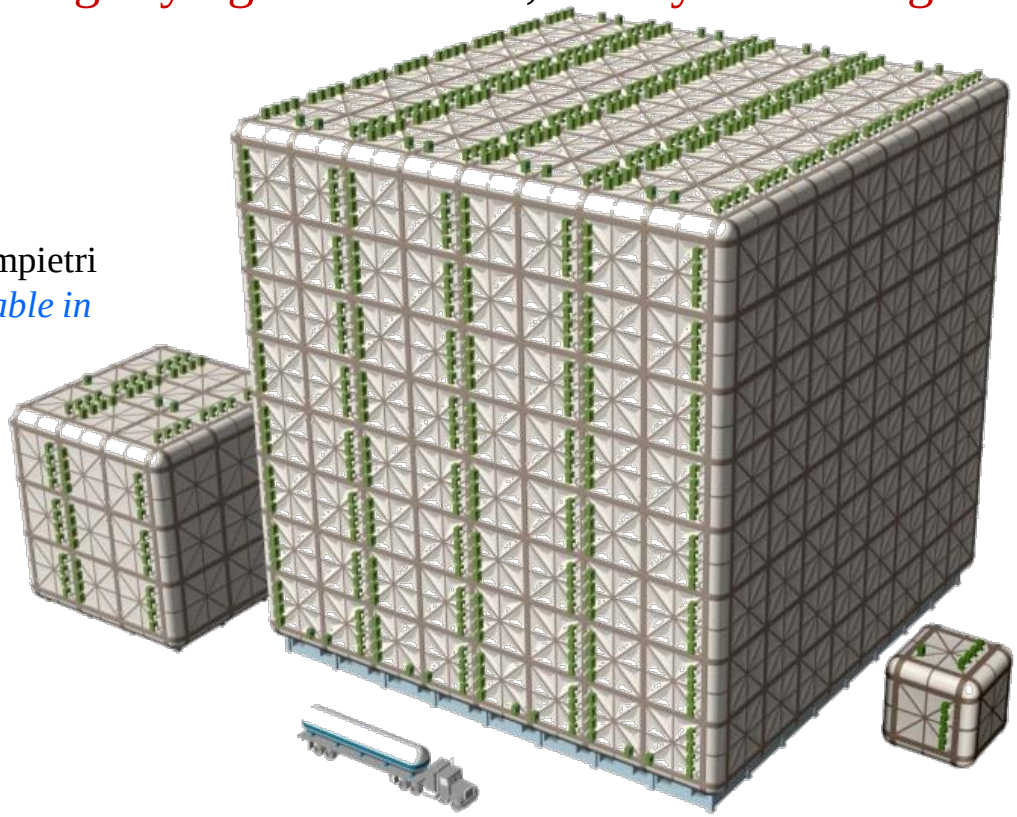

LANNDD Underground

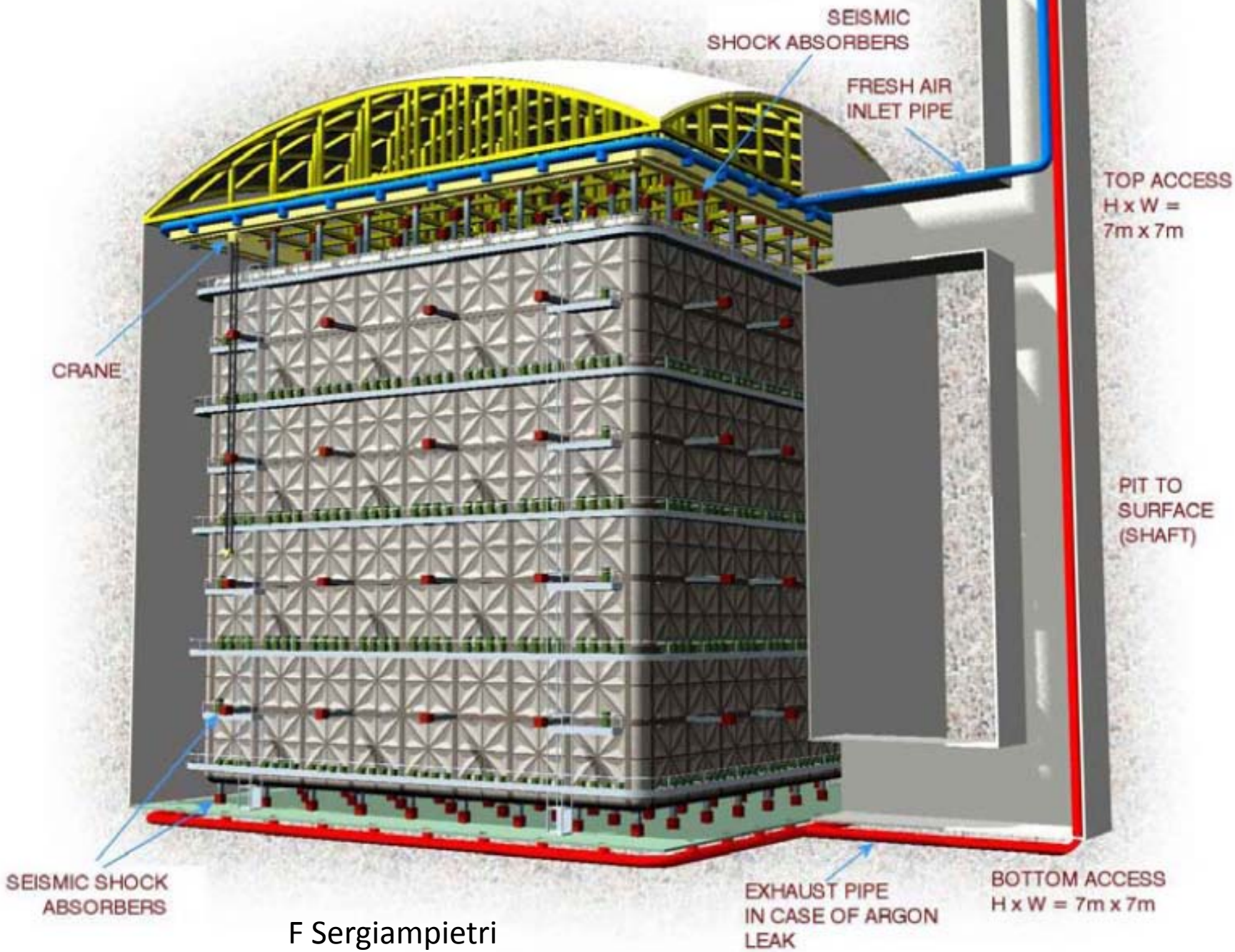

F Sergiampietri

LANNDD Concept 2

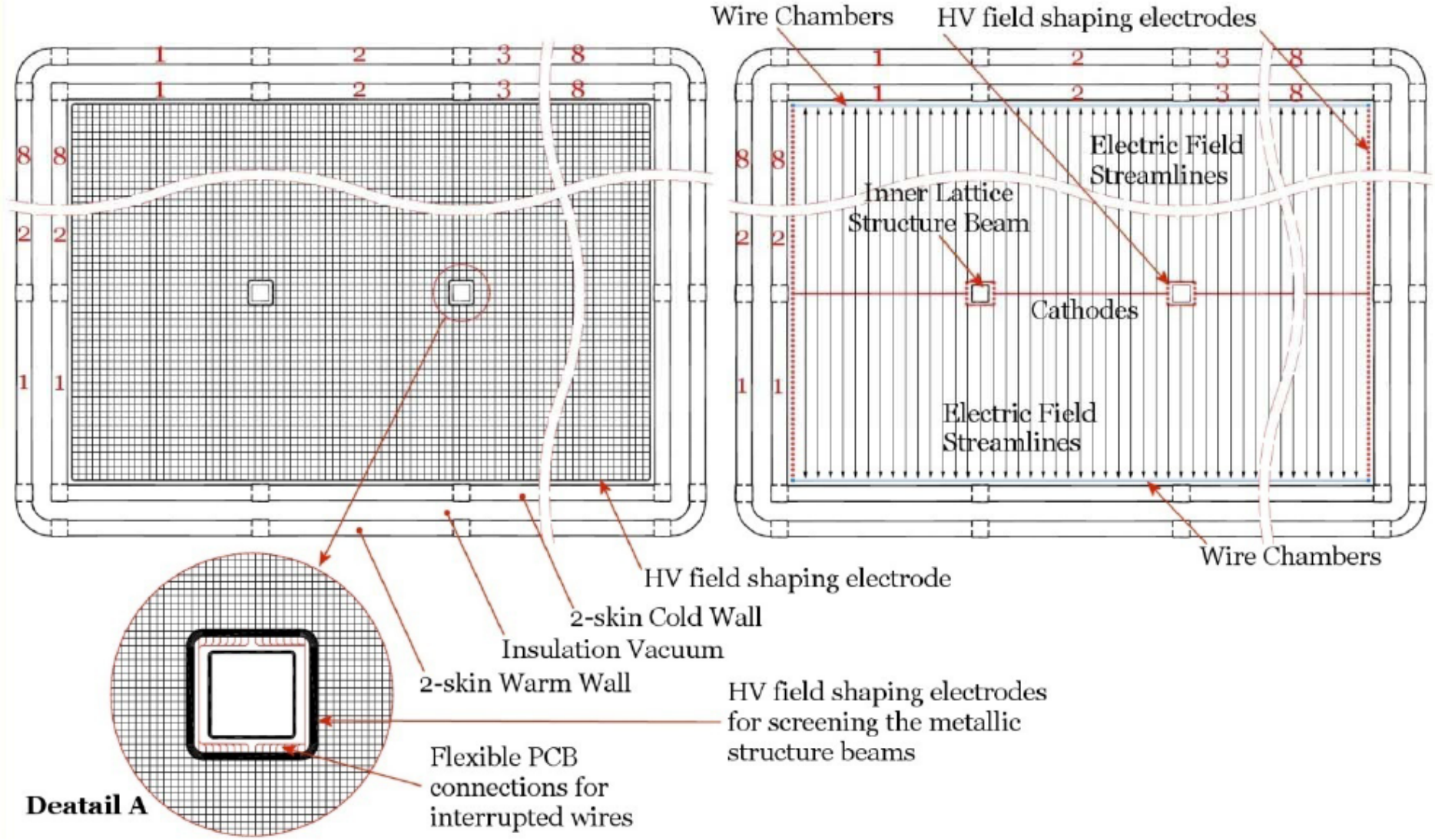

F Sergiampietri

LANNDD single cell

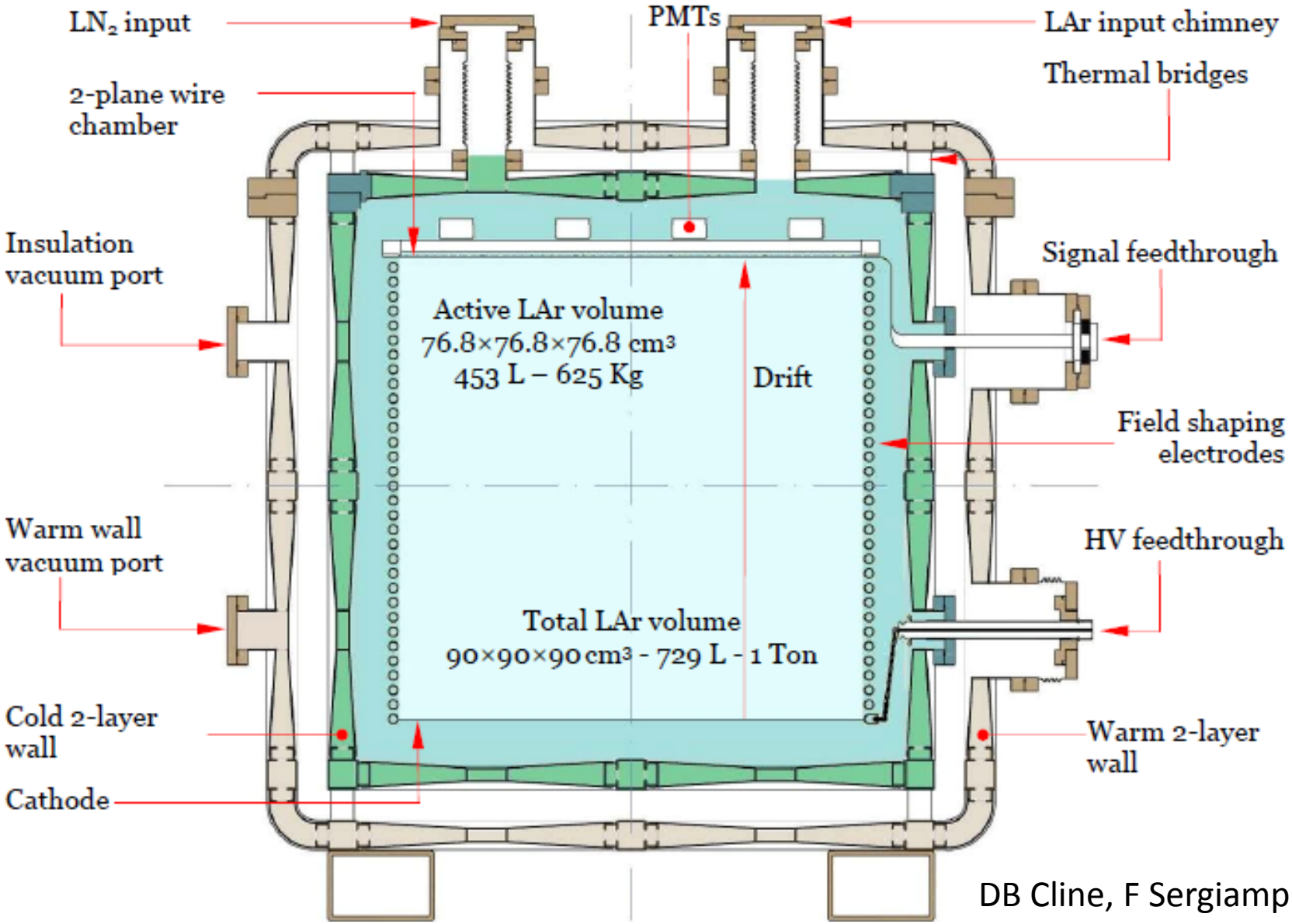

DB Cline, F Sergiampietri

LANNDD Vacuum Insulated Cryostat

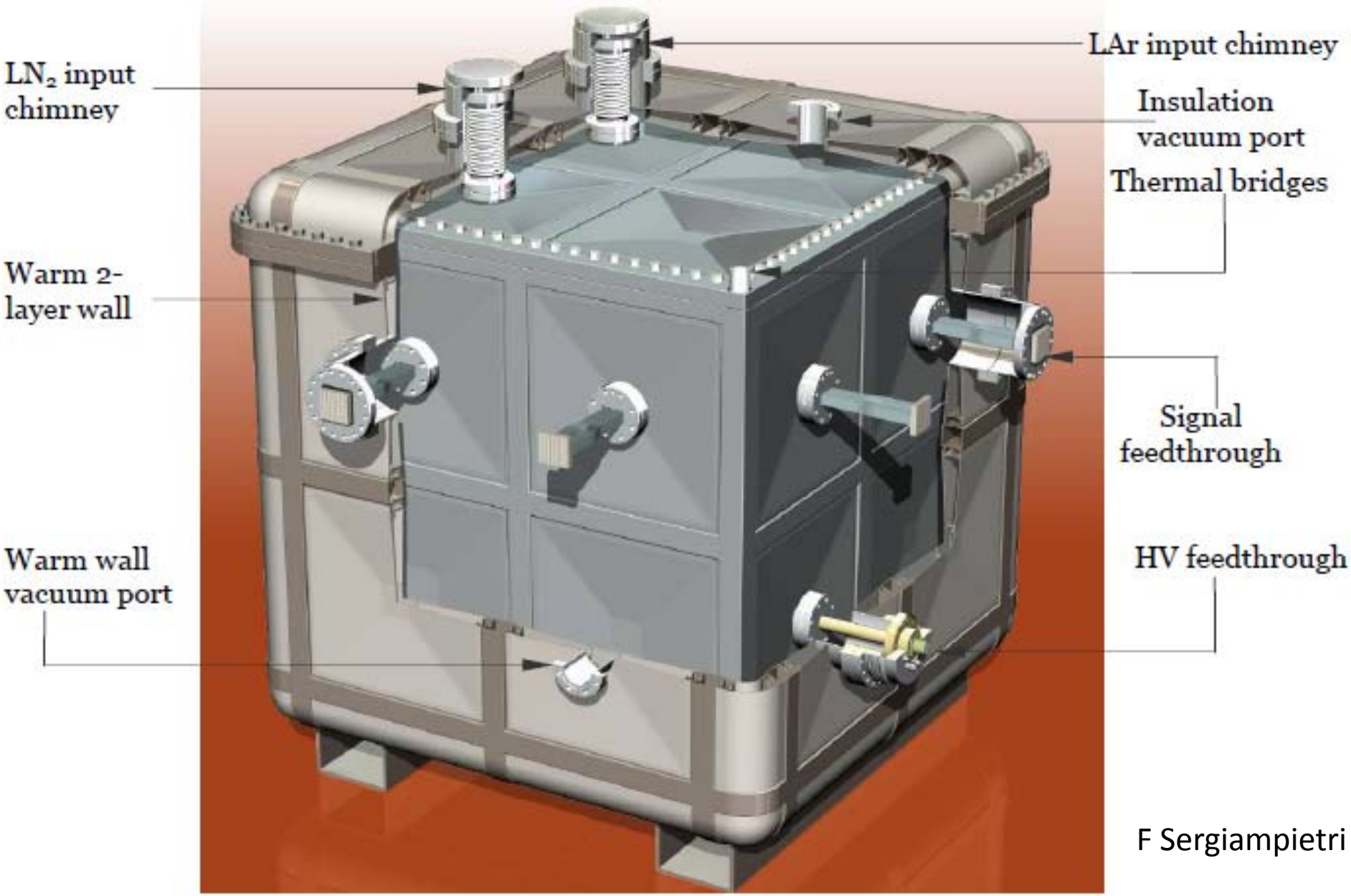

F Sergiampietri

ICARUS Installation

Figure 8. Mounting the TOP insulation panel.

Figure 9. TOP insulation external welding.

Figure 4. INVAR containment wall.

Figure 5. External structure.

Figure 6. TOP cooling screen.

Figure 7. Superinsulation layer.

ICARUS T600 at Gran Sasso

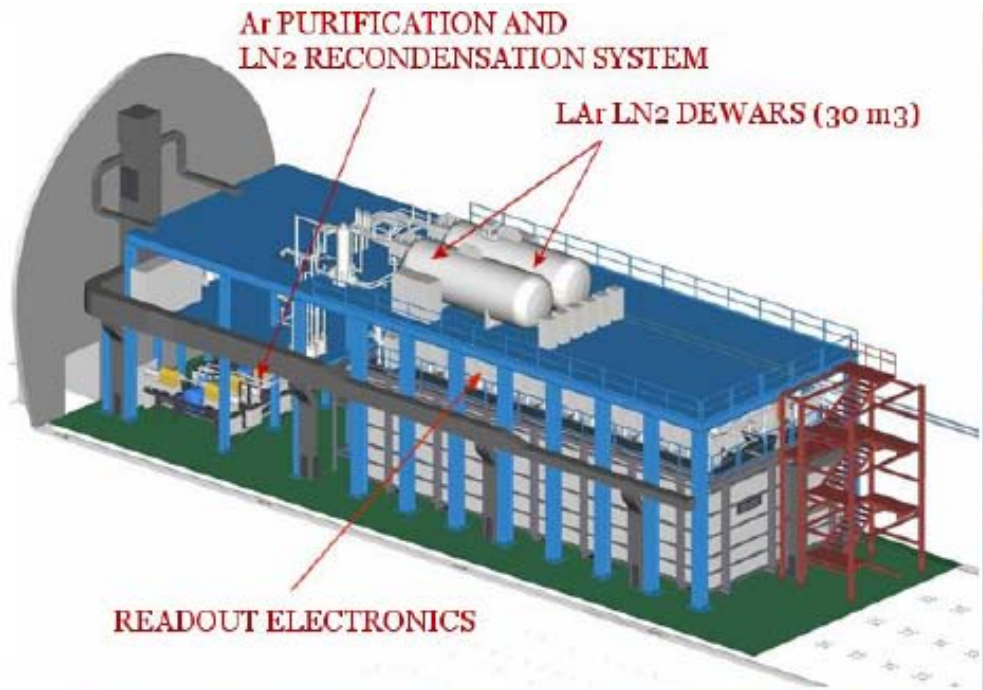

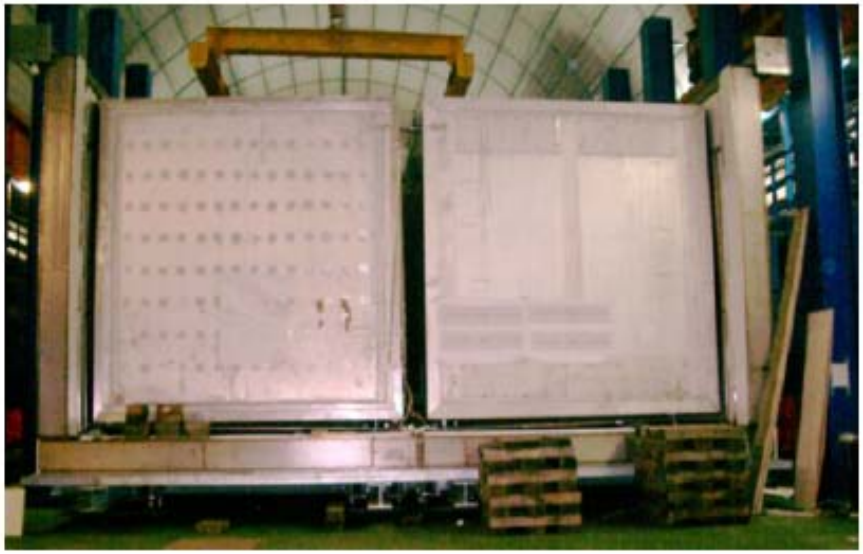

Figure 38. ICARUS T600 on June 2007

Figure 39. ICARUS T600 on July 2008

ICARUS Installation at Gran Sasso

Figure 37. The T600 in the Hall B of the LNGS (June 2008).

Figure 28. LAr and LN2 storage in their final positions.

Figure 229. Stirling N2 re-liquefier array in its final position.

Underground caverns for DUSEL experiments
5kton fits in the largest of the caverns planned for the ISE

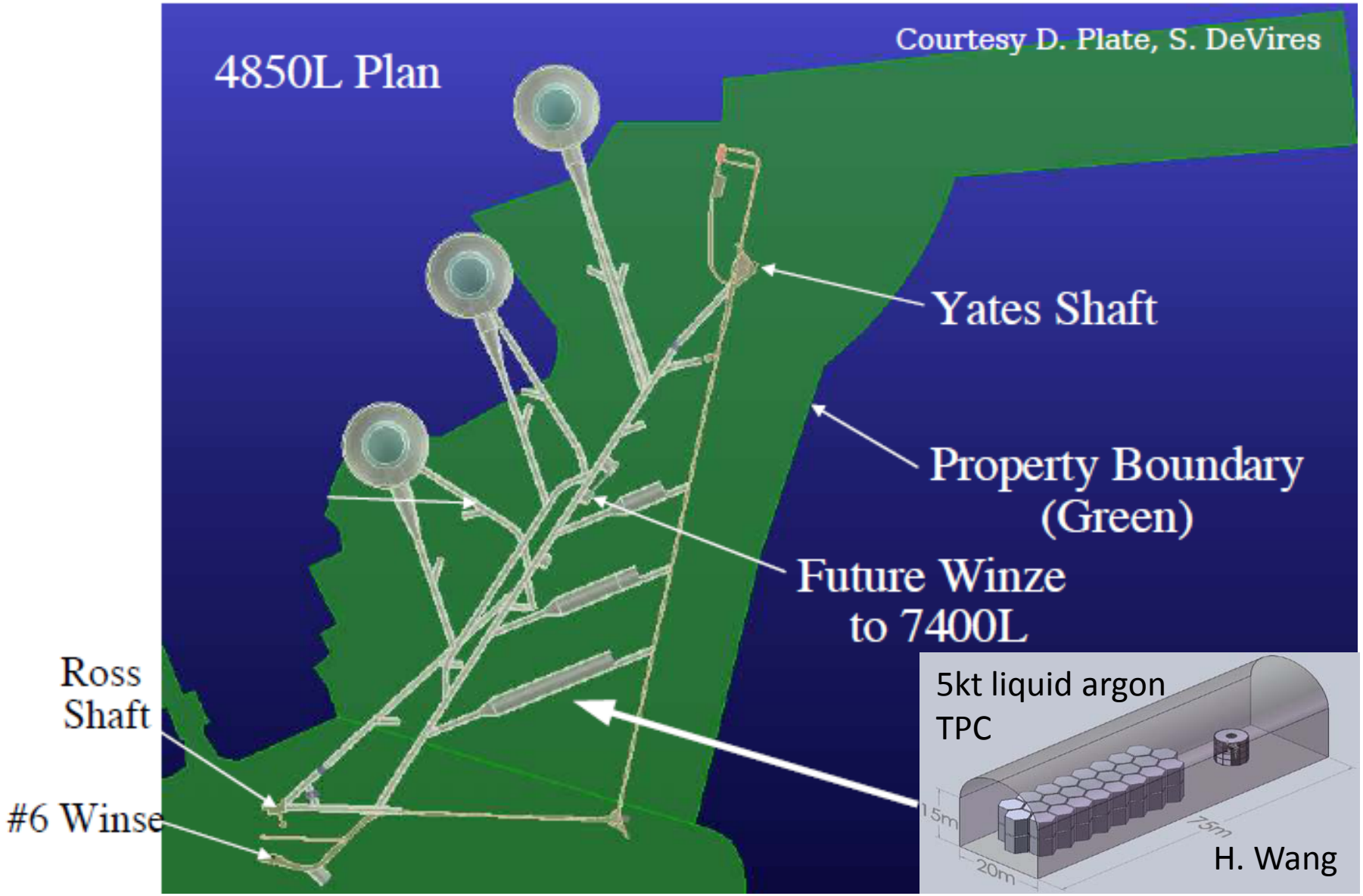

One 100-Tone Cell structure

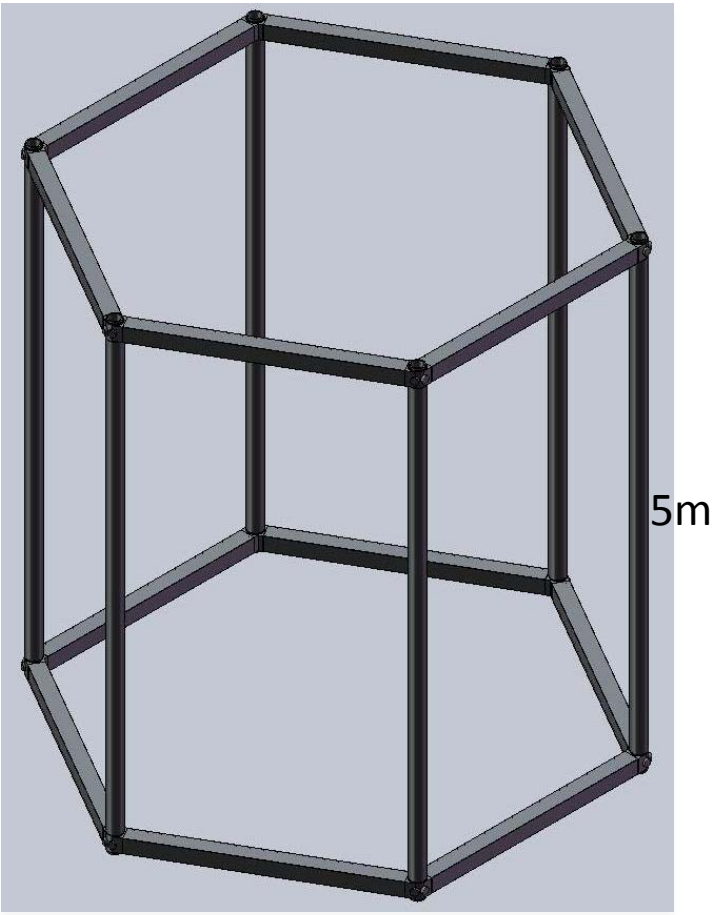

5m drift

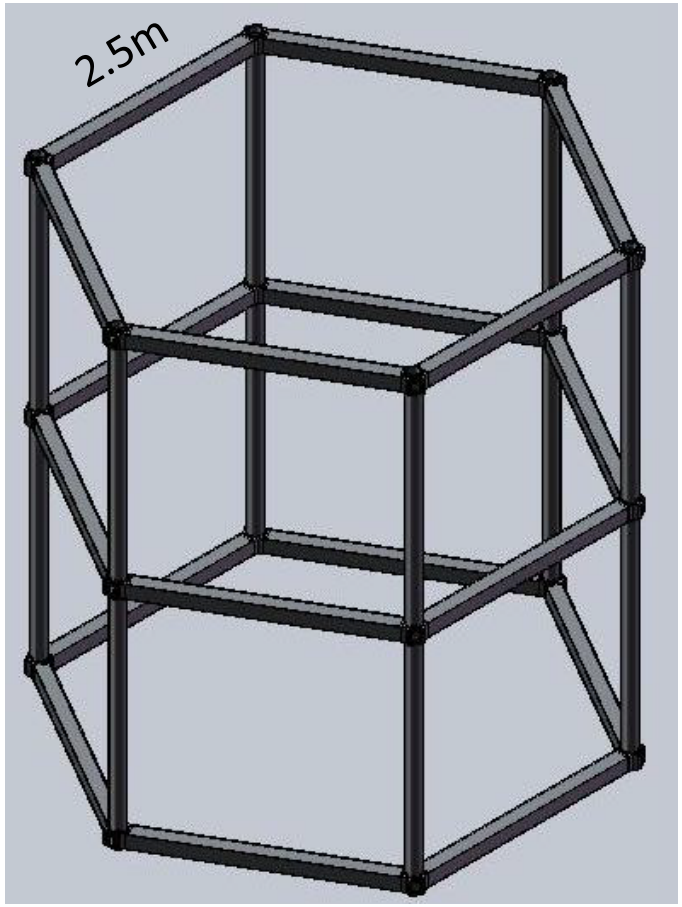

2.5m drift

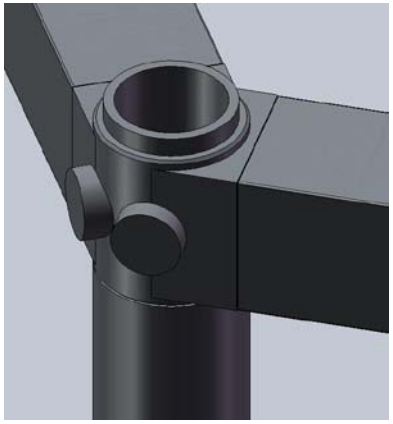

Outer corner for side panel fixture

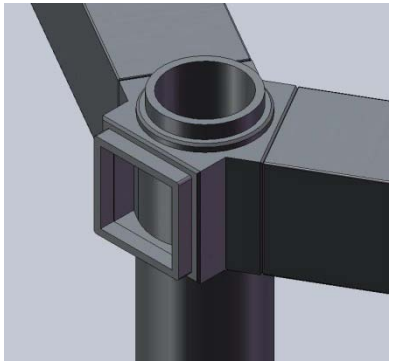

details

Only three unique parts:
Total 2048 parts

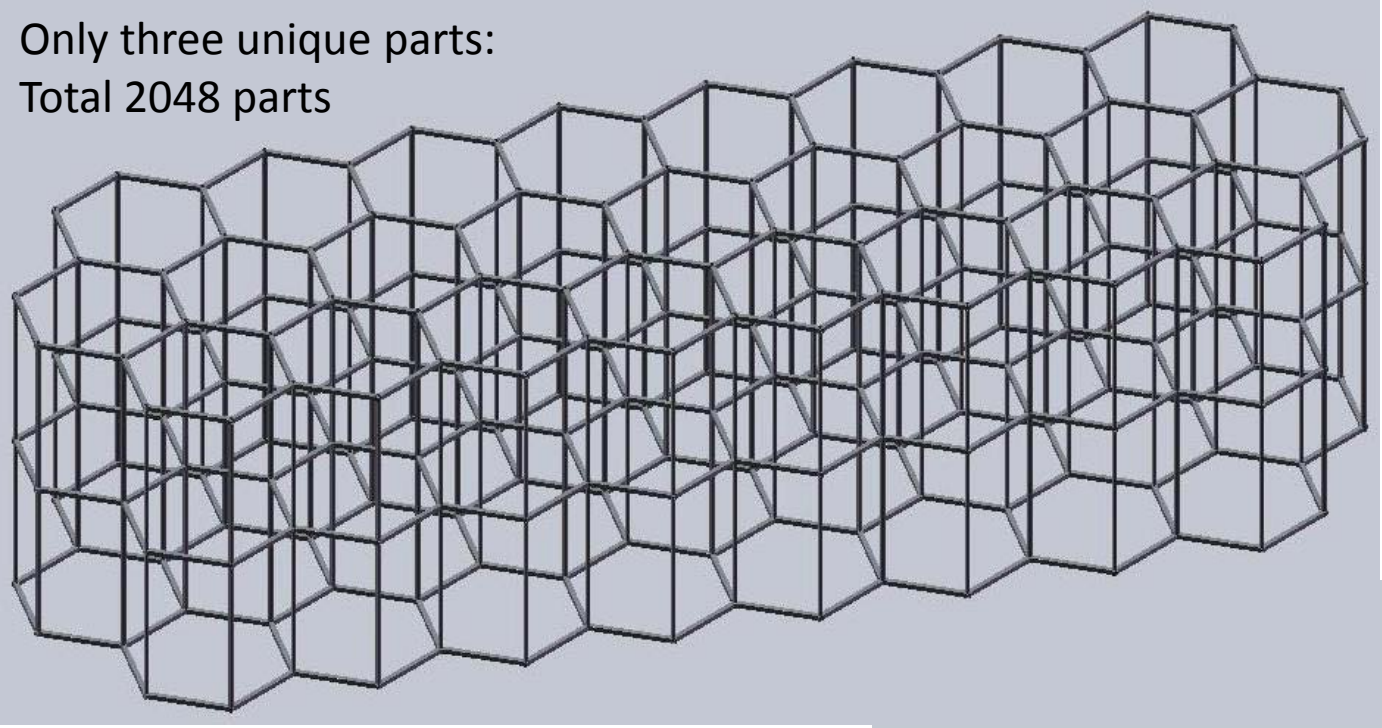

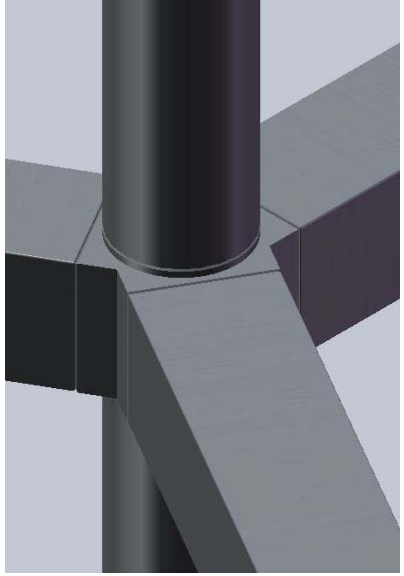

50 modules of 100T each showing the inner self supporting structure and detailed structure link

Note: additional small rings on the vertical beam for field, no other materials needed

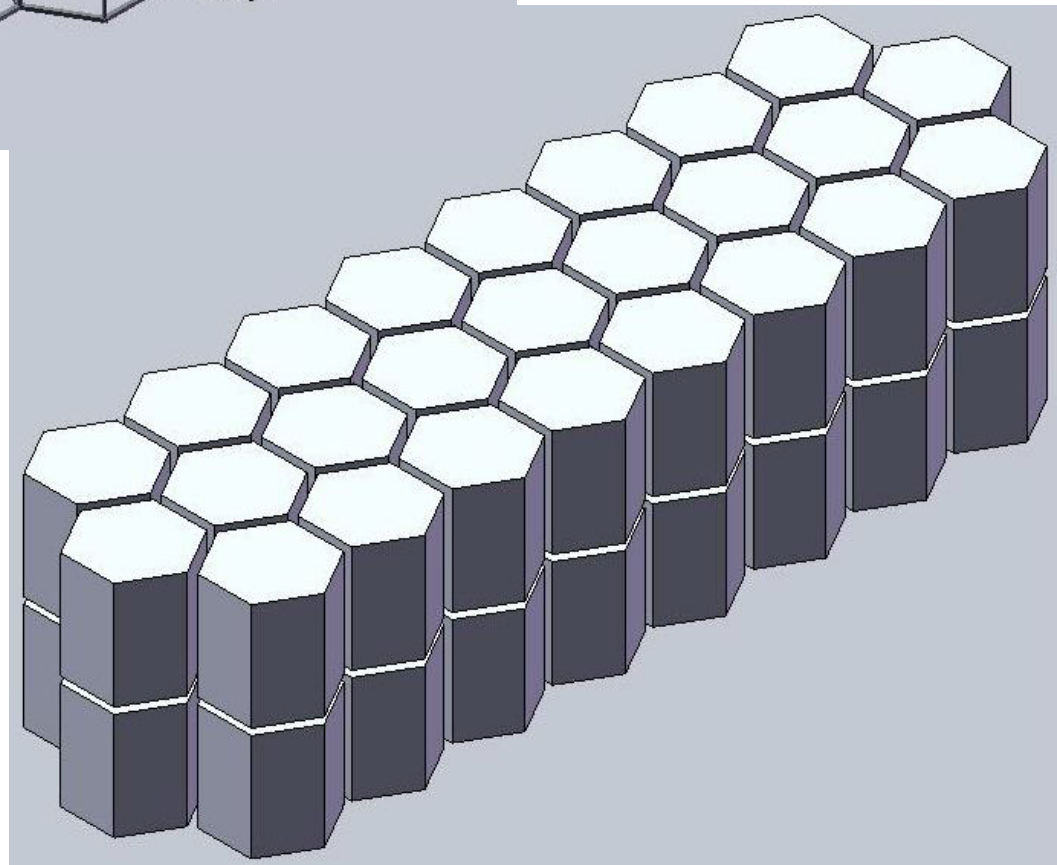

A simple 2.5m x 2.5m x 5cm flat panel using 5mm stainless steel sheets and 10mm thick square beam stress under 1bar pressure. A safety factor of 2.35! Little work is needed to optimize to reach required safety factor.

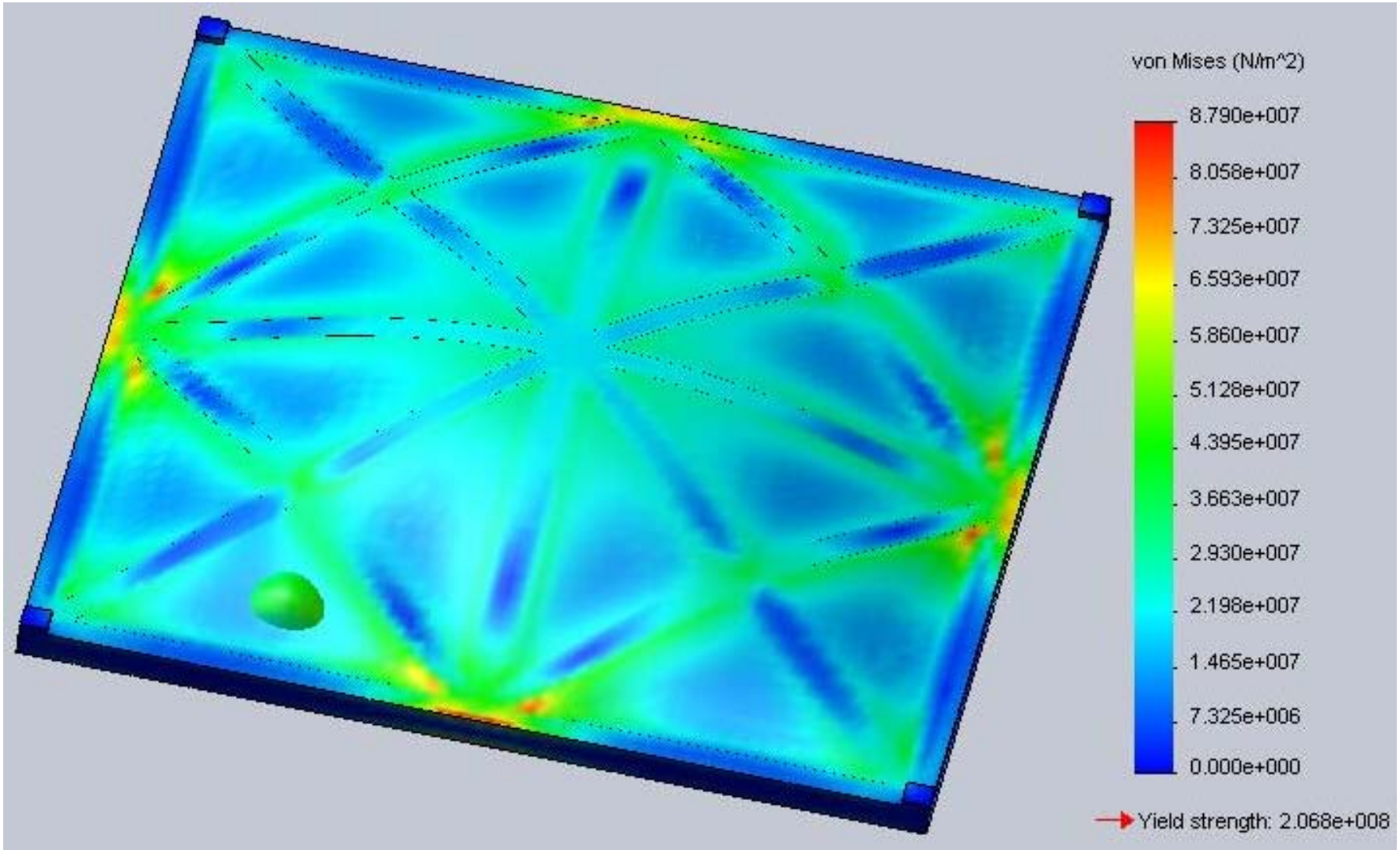

TPC Details

Field shaping ring details

(insulating support s of rings now shown)

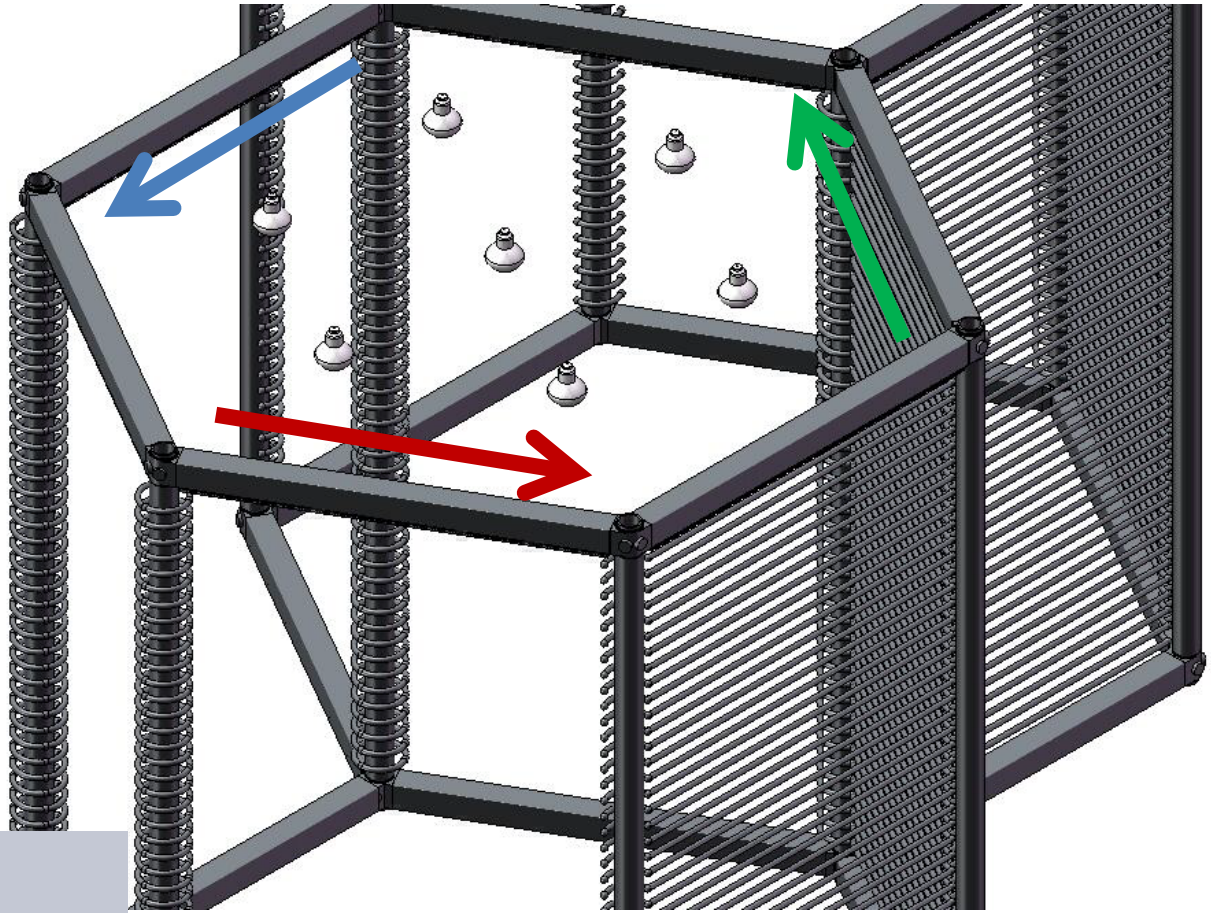

UVY Plan orientation

Wire Support System and field shaping rings

Add Cable Bridge to Link wires between cells

Details of a single test cell 100T Module

Showing:
Field cage,
PMT, and
wire holder
(no cathode yet)

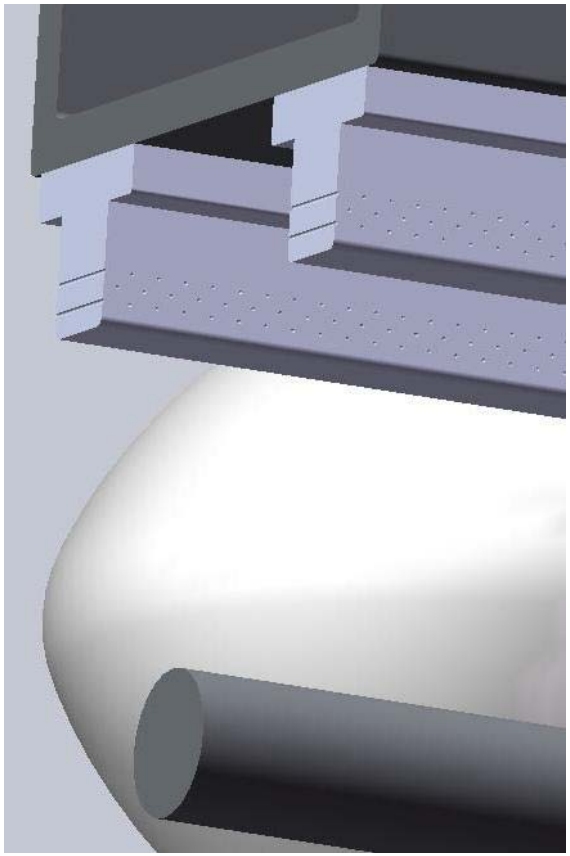

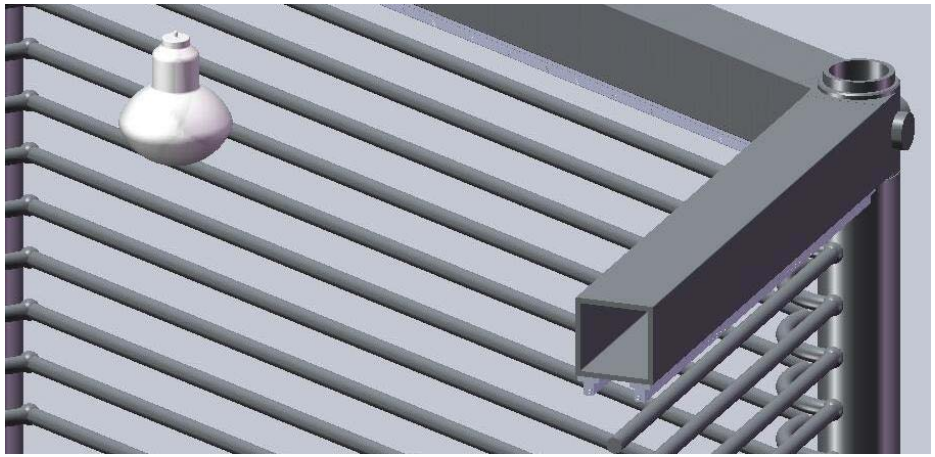

1GeV Electron

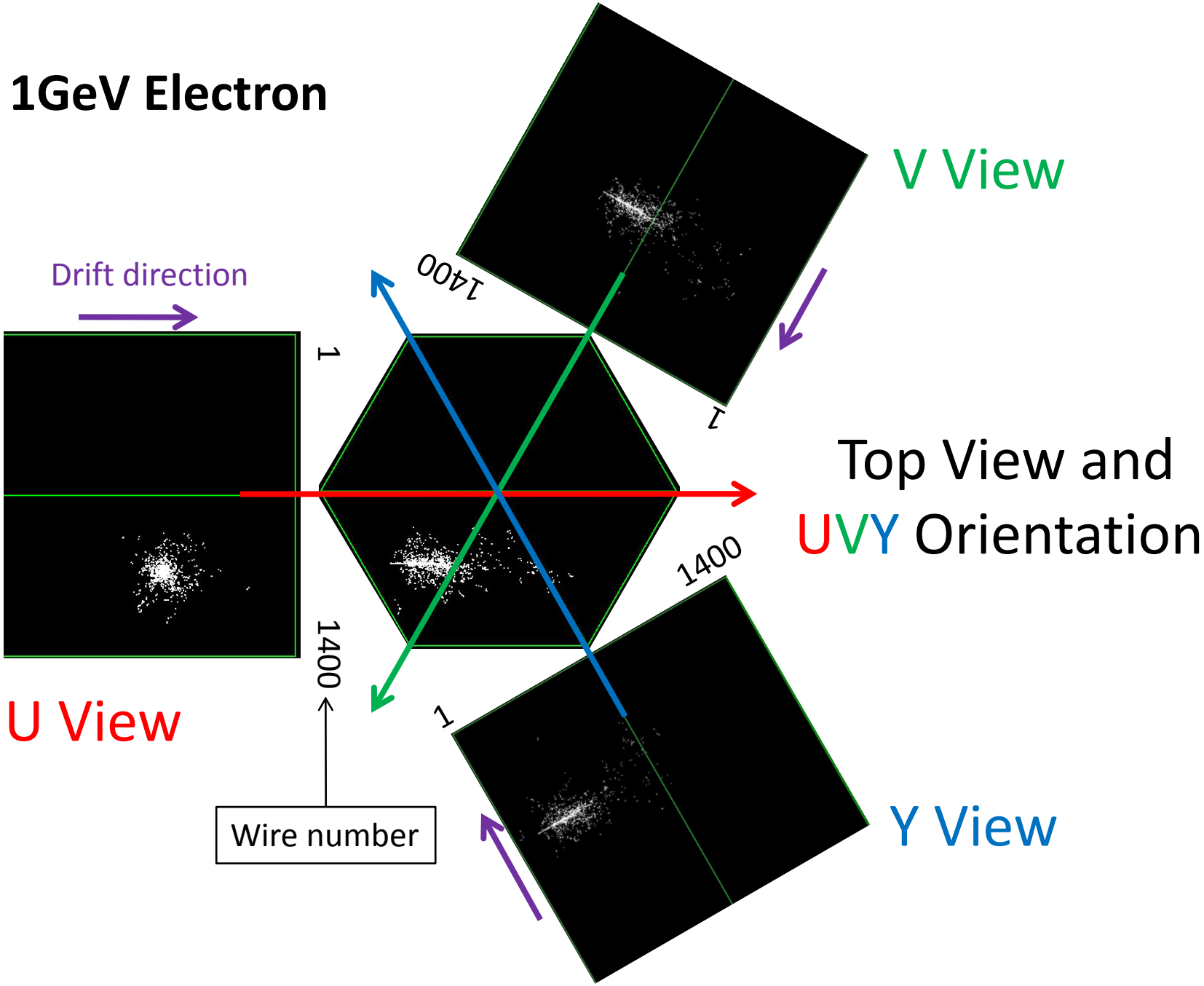

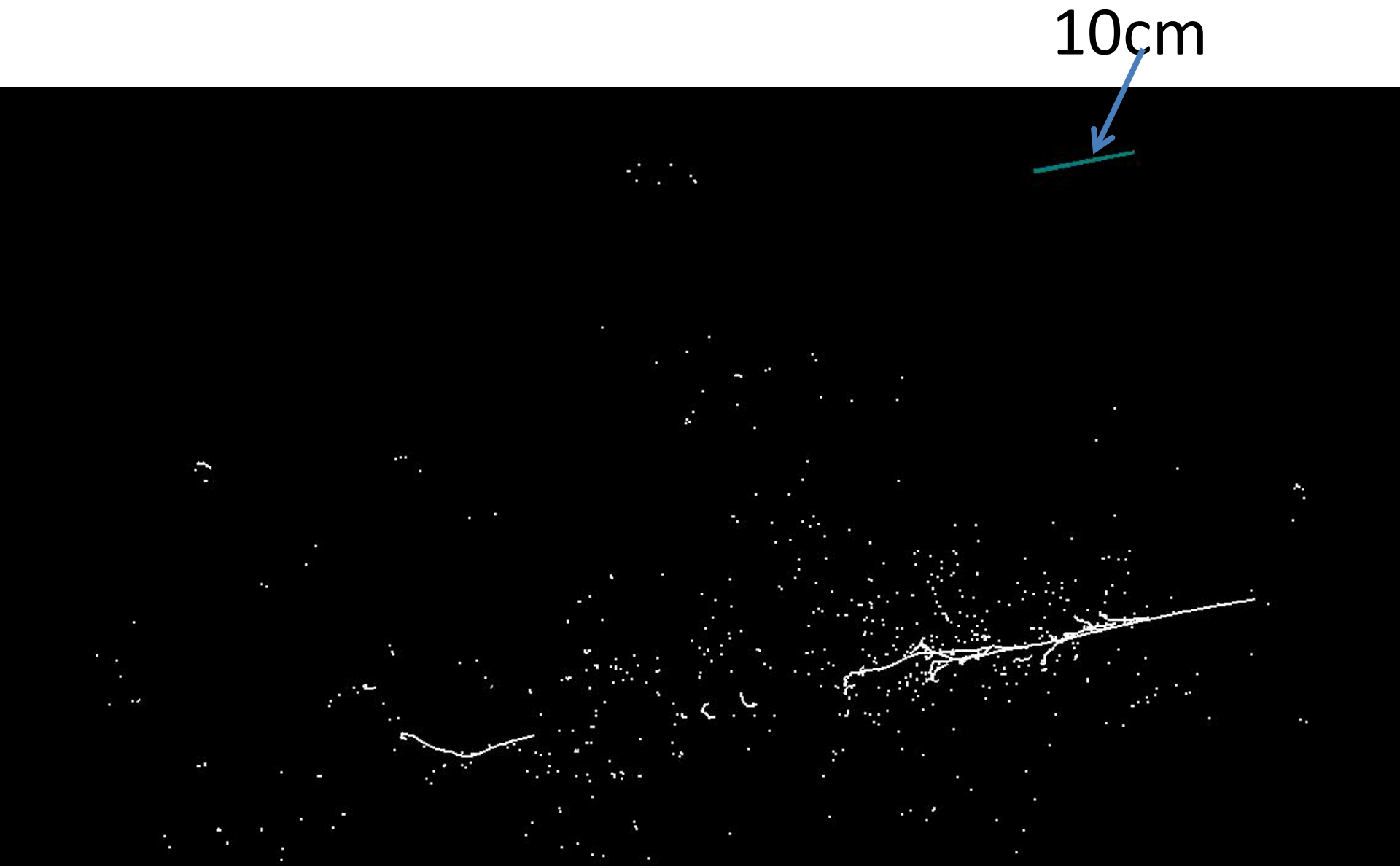

500MeV Electron interaction in Liquid Argon

Wire Termination and Assembly methods being studied at BNL (Bo Yu)

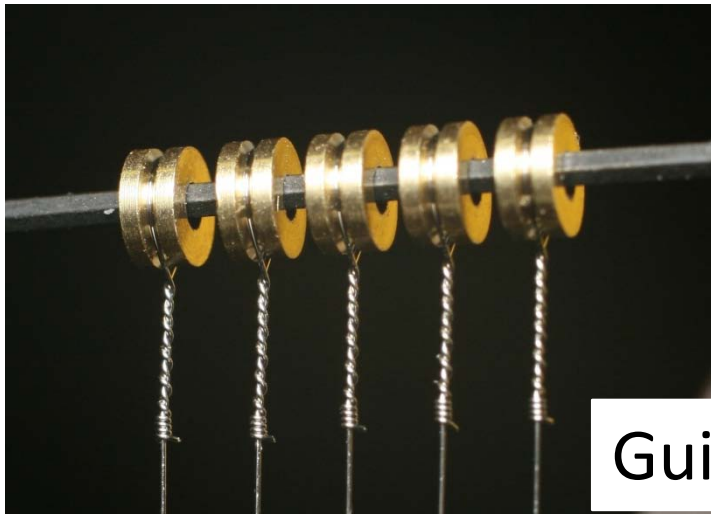

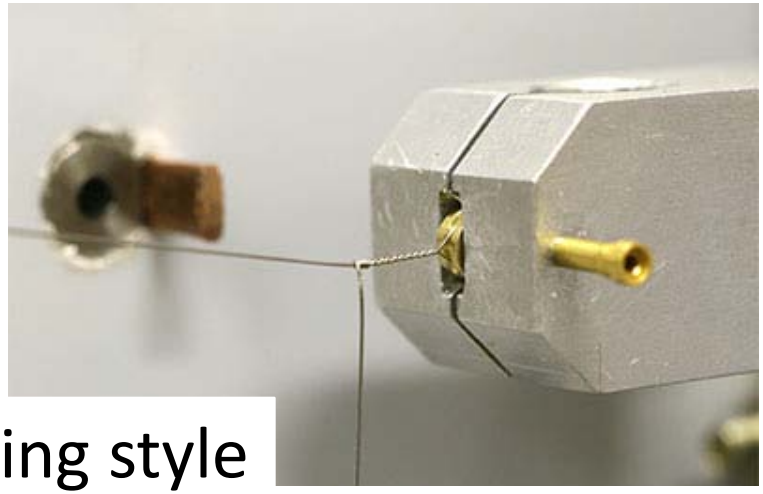

Guitar string style

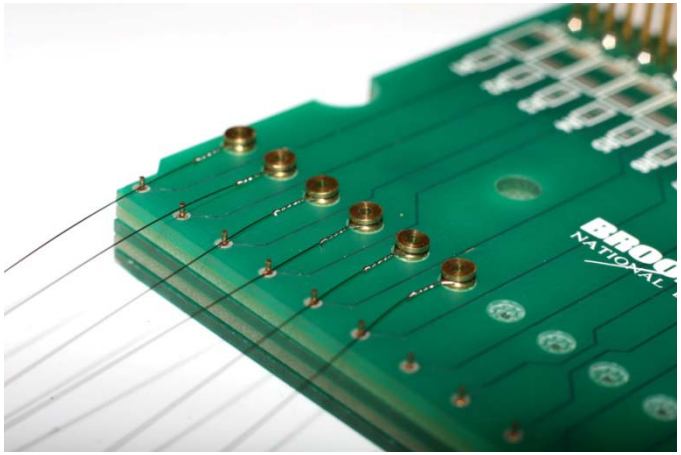

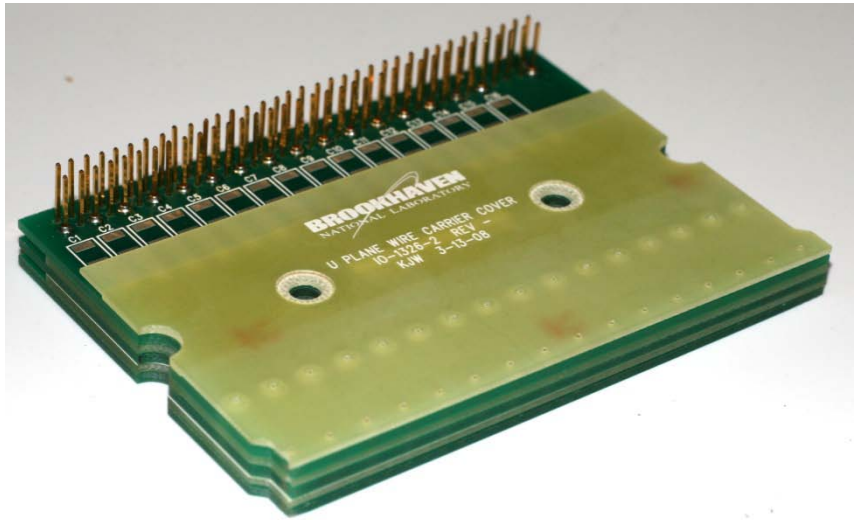

Integrated wire holding and cable connection

Wire plane grouping To reduce total number of channels

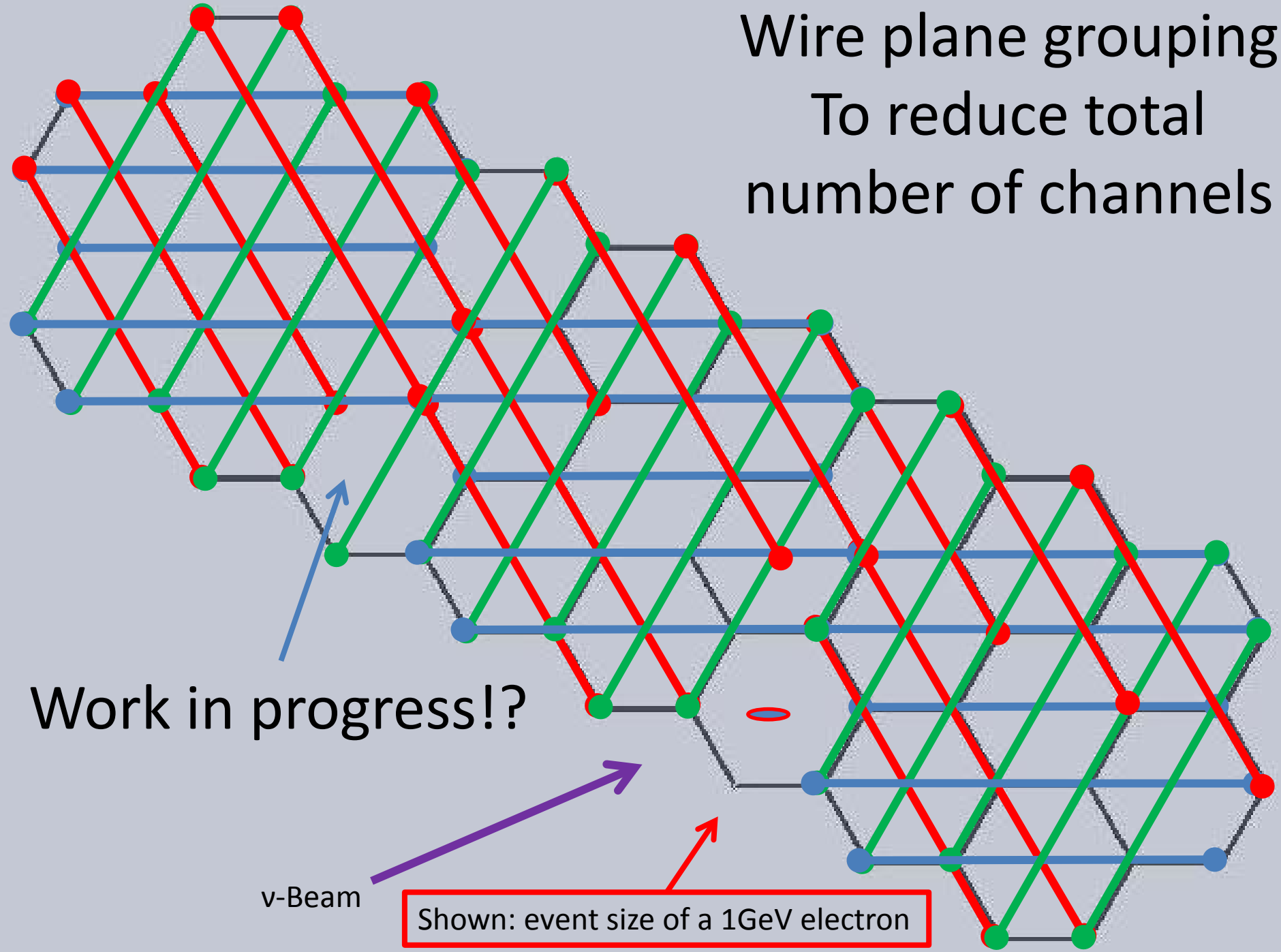

1-GeV Muon in Liquid Argon

Muon starting from the last cell will not be fully contained
Most likely we will have four cell minimum in any direction

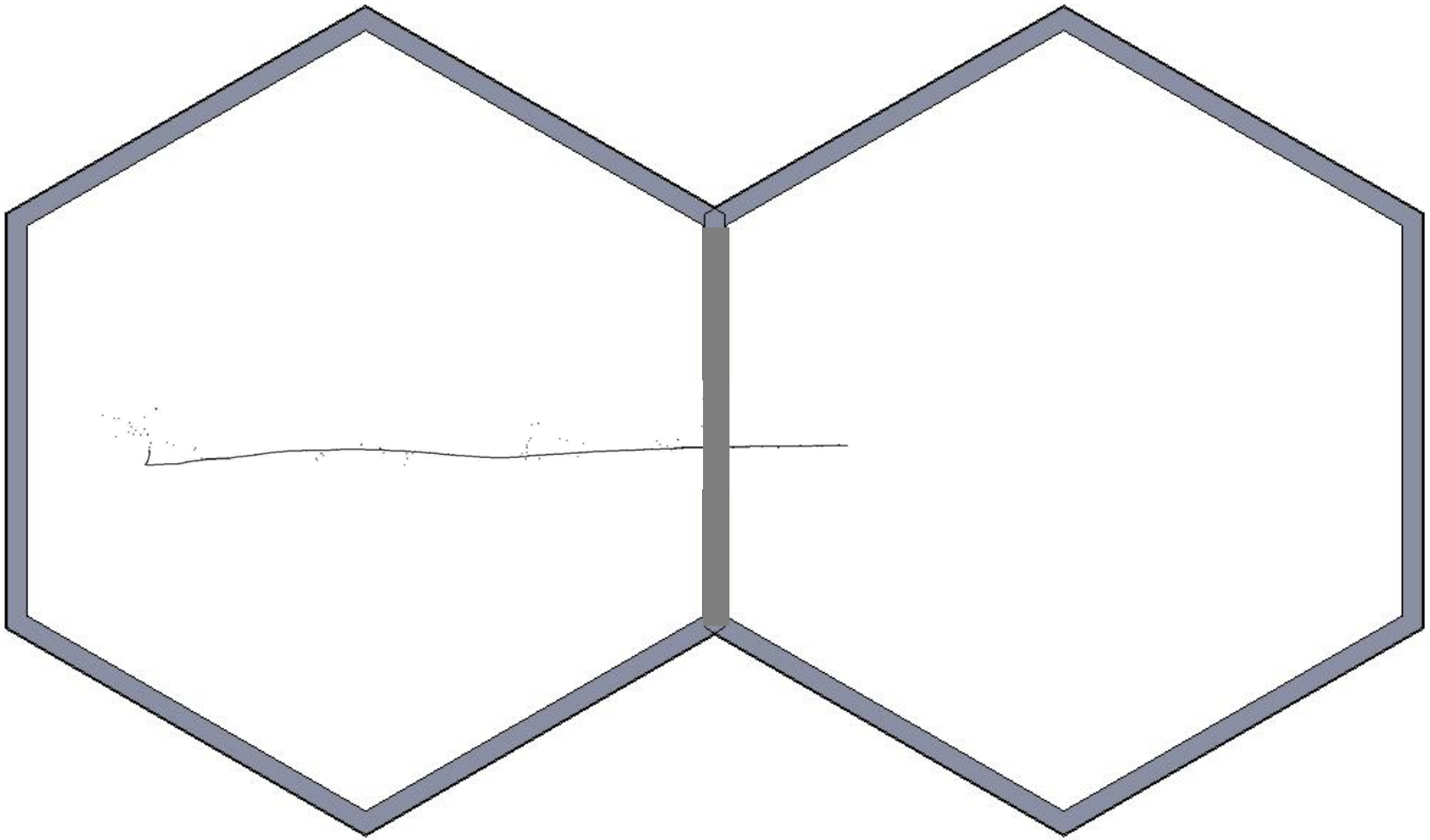

NGLArD 5kT 50x100T @ DUSEL

share with a Tone Scale Xenon Dark Matter Detector

Shown fiducial cells only, cryostat panel and insulation panel adds ~1m on each side

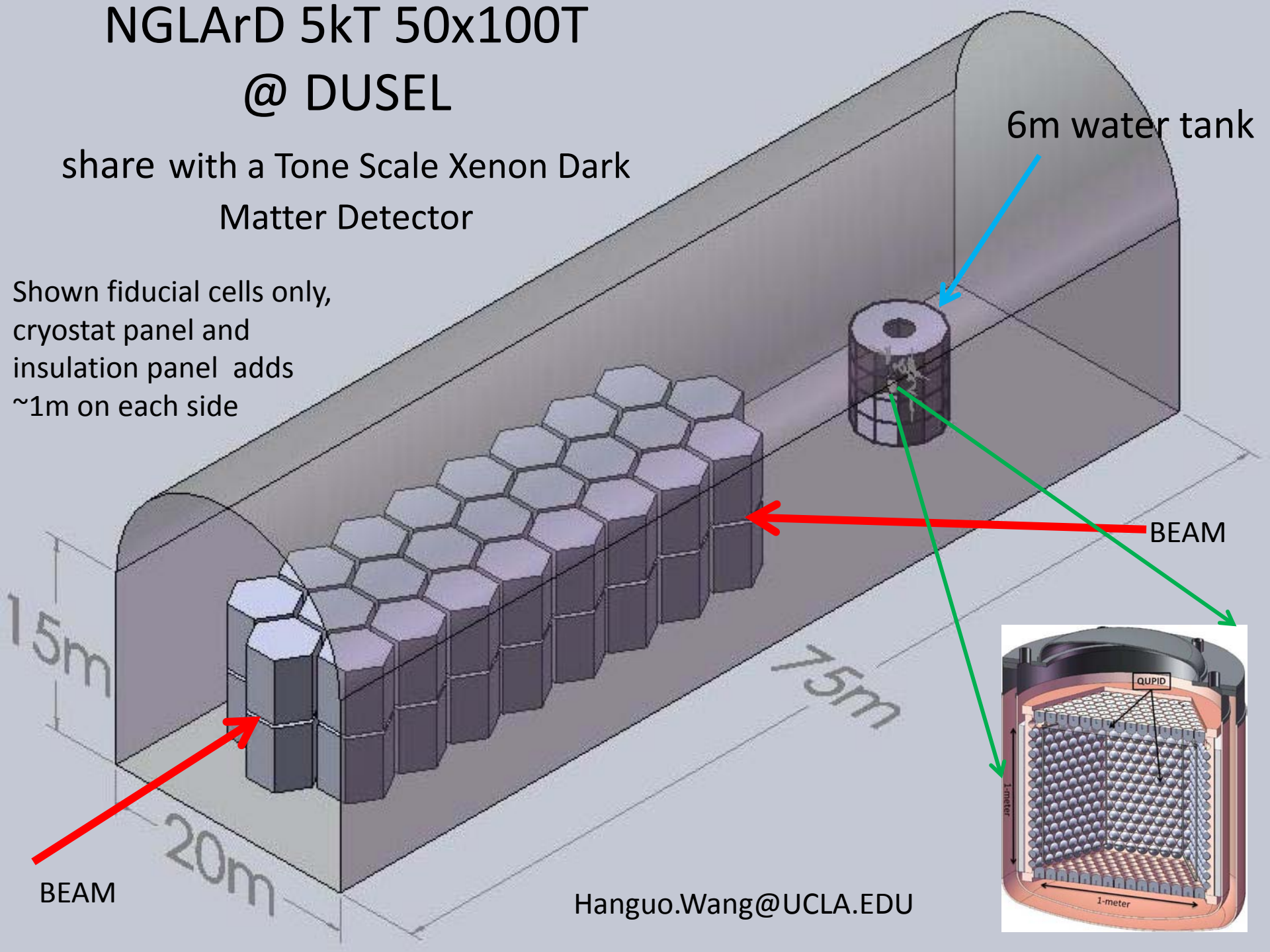

Hanguo.Wang@UCLA.EDU

Key features

1. Large single cell volume Hex shape optimized fiducial/total ratio
2. High efficiency for high energy event containment (need more MC to optimize)
3. Neutrino beam can come from any direction (12m track minimum in any direction)!
4. Scale to any size (limited by funding and cavern volume)
5. Low number of unique parts but many of each type for cost effective mass production
6. Vacuum and pressure vessel design reduced to
    1. 2.5m x 2.5m (5m) side panel
    2. 2.5m side hex dome
7. Link wires from two or more cells to reduce number of electronic channels
    1. All channels have the same or similar total wire length (~noise)
    2. All cables are similar length (~noise)
    3. Electronic can be either in/outside (wires have the same distance to external wall!!)
8. Can be evacuated for vacuum!!!
9. Can stand pressure. Structurally very stable.
10. Vacuum insulated for perfect thermal insulation (long term running cost, cooling!)
11. Link cryostat-vessel with thermal-insulation-vessel using thermal ink
12. Closed loop LN2 cooling (www.DDrive.com) with integrated cooler (1kW/each) (similar to ICARUS, during normal operation, no LN2 boil off!)
13. Simplified tasks for cost quote and construction schedule
14. Large scale engineering problem reduced to 5m scale problem (vacuum and pressure panels).

List of parameters

1. Hex frame beam (horizontal): 1cm thick wall, 150mm square
2. Vertical beam: 100mm diameter round tube of 1cm thick
3. 4200 wire channels per hex cell (three plans of UVY of 1400 wires/each
4. Total number of channels: 4200*50=210,000 (for 5m drift, wire-ungrouped)
5. Fiducial size: 2.38m hex side, 4.7m high, of 69m^3 of 96.8 tone
6. Cell size: 2.5m hex side of 5m high, 81m^3 volume, 114-tone Ar
7. Cryostat (and vacuum insulation vessel):
    1. Number of cells: 2 x 25 = 50 -> 5.7k-ton total
    2. Fiducial argon 4.84kt (85%)
    3. Number of 2.5x2.5 square cryostat side panels: 21x4x2 = 168
    4. Number of square vacuum side panels: 21x4x2 = 168
    5. Number of hex domes: 2*50 (cryostat and vacuum)
8. Number of PMTs: 7*50 8inch = 350 (to be determined, need MC work on t-zero tag efficiency)

Conclusion

1. A Honeycomb structure is proposed for 5kt liquid argon TPC
2. Vacuum cryostat vessel could be build using the TPC as internal support structure.
3. The cryostat can be vacuum insulated (cost saving on operation)
4. Fit in Gran Sasso Hall B type underground hall
5. Cost saving on repeated small part
6. Could scale indefinitely (funding limited for TPC and cavern)
7. Once built one module, full future planning can be known.

1. Cooling, purification, safety and so on not included in this talk.