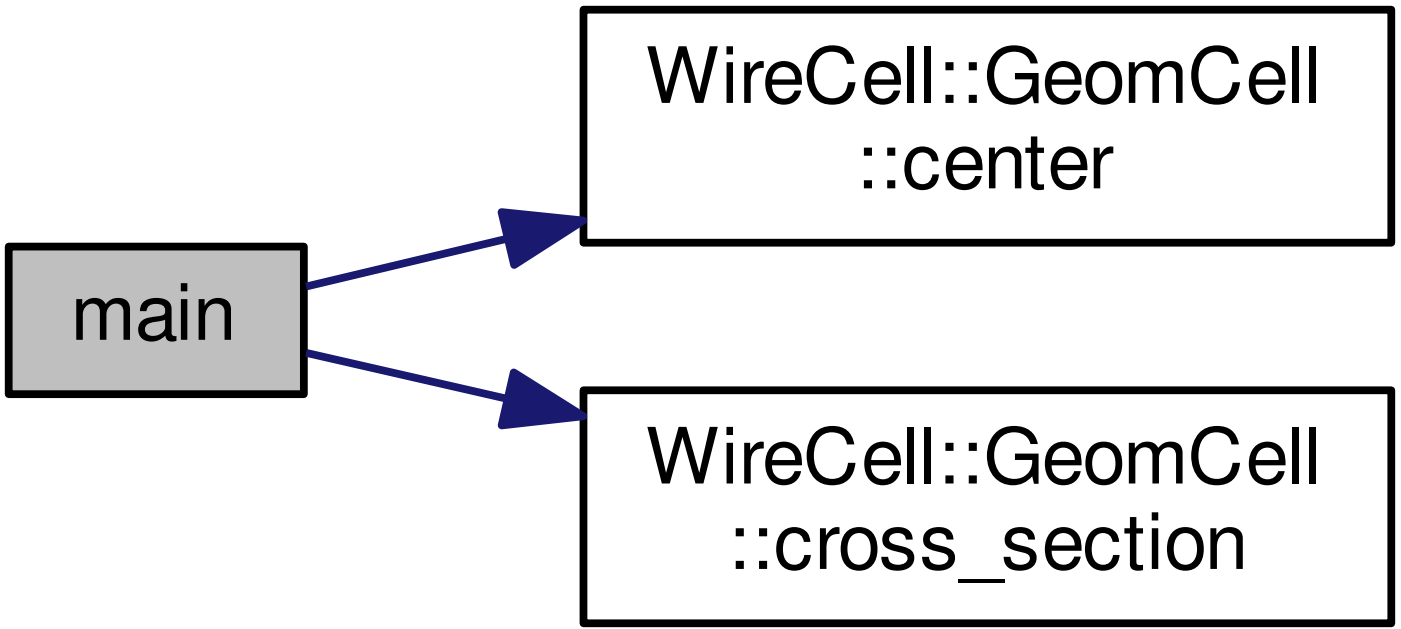
main
WireCell::GeomCell
::center
WireCell::GeomCell
::cross_section