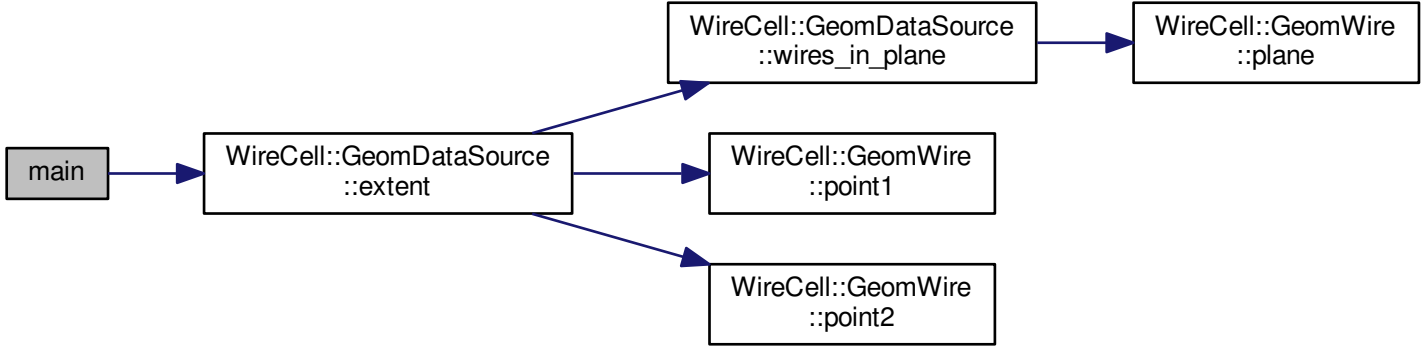
main
WireCell::GeomDataSource
::extent
WireCell::GeomDataSource
::wires_in_plane
WireCell::GeomWire
::plane
WireCell::GeomWire
::point1
WireCell::GeomWire
::point2