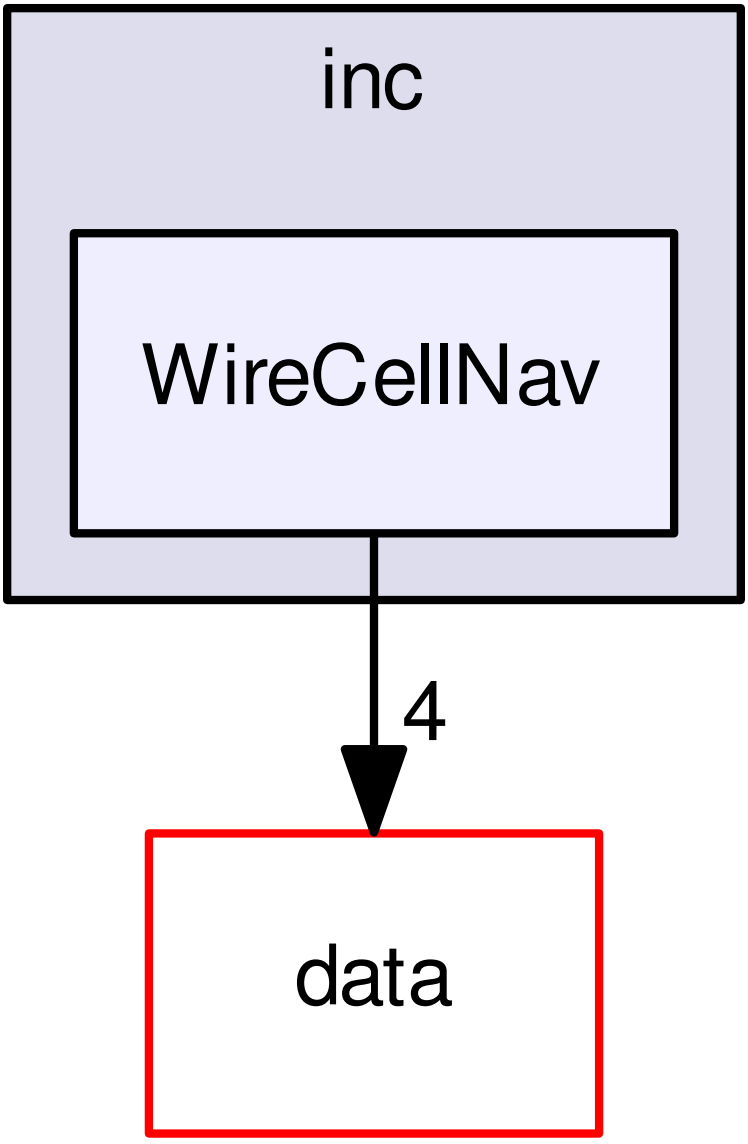
inc
WireCellNav
4
data