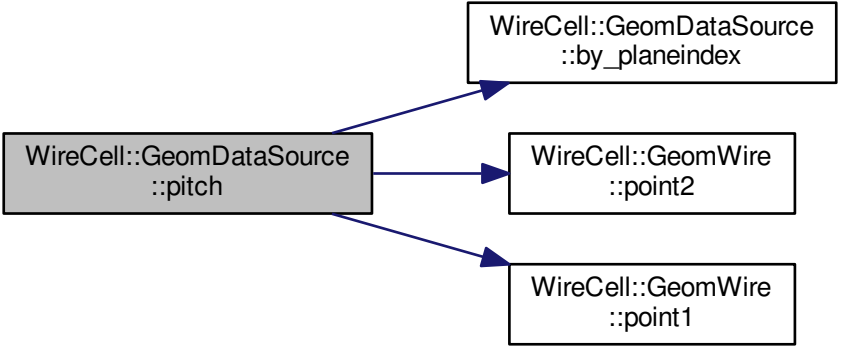
WireCell::GeomDataSource
::pitch
WireCell::GeomDataSource
::by_planeindex
WireCell::GeomWire
::point2
WireCell::GeomWire
::point1