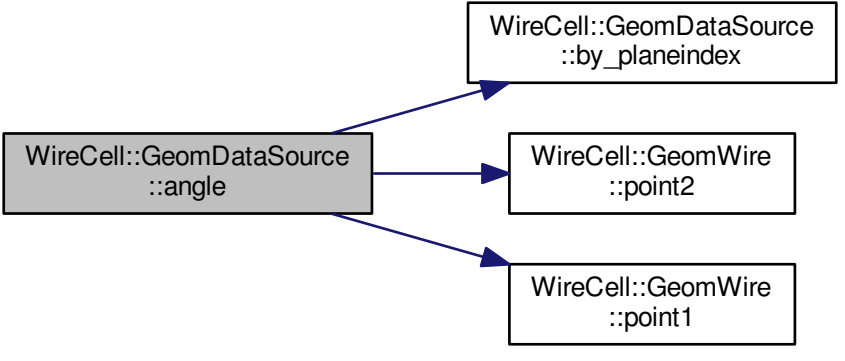
WireCell::GeomDataSource
::angle
WireCell::GeomDataSource
::by_planeindex
WireCell::GeomWire
::point2
WireCell::GeomWire
::point1