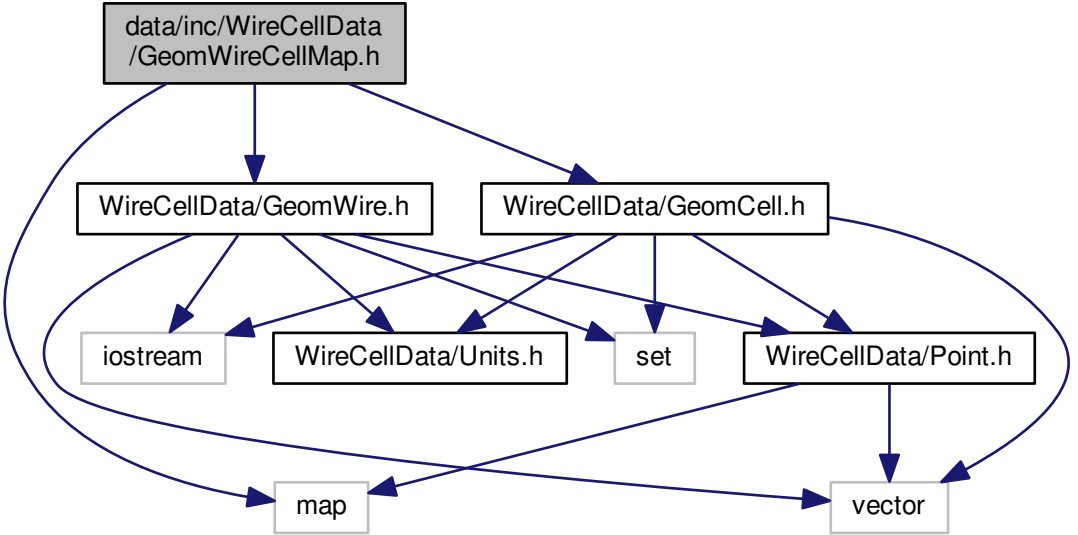
data/inc/WireCellData
/GeomWireCellMap.h
WireCellData/GeomWire.h
WireCellData/GeomCell.h
iostream
WireCellData/Units.h
set
WireCellData/Point.h
map
vector