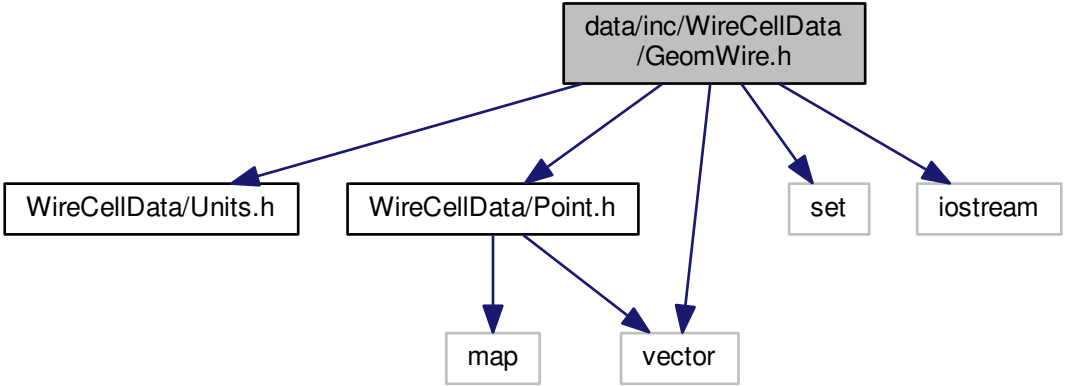
data/inc/WireCellData
/GeomWire.h
WireCellData/Units.h
WireCellData/Point.h
set
iostream
map
vector