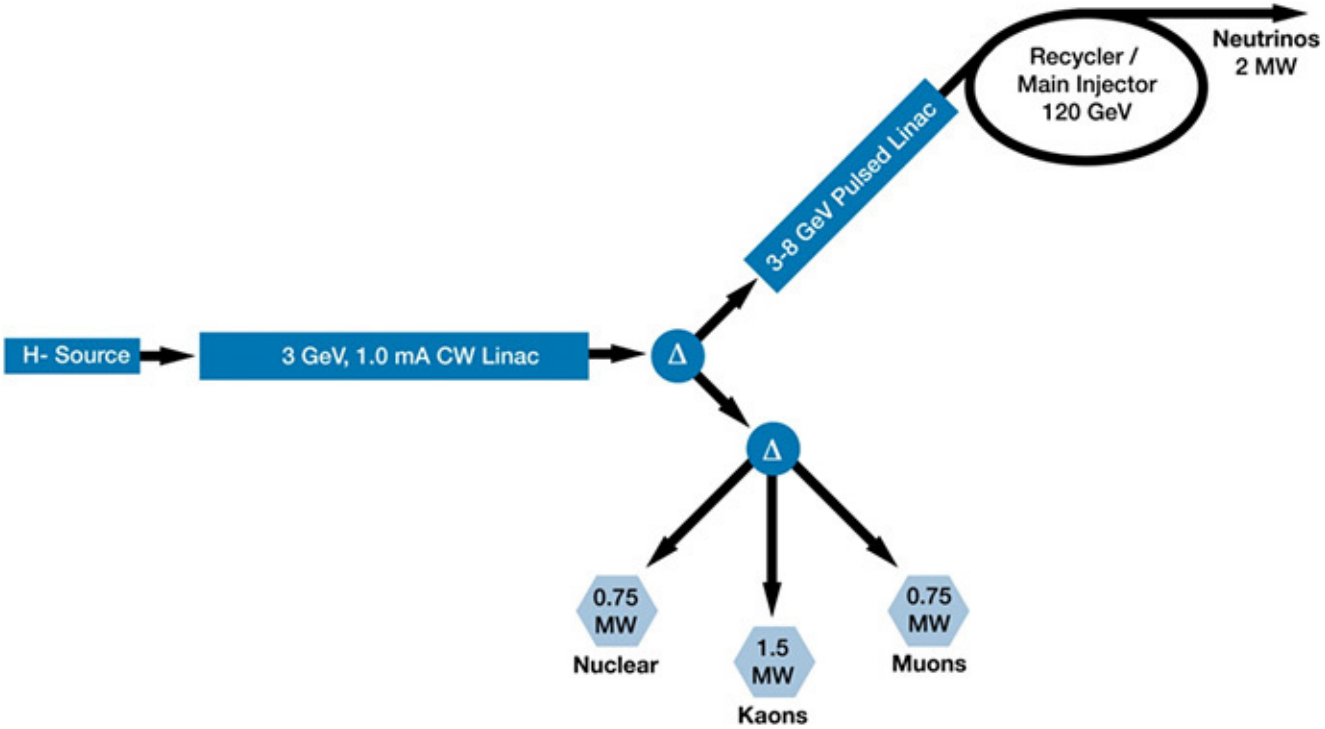
Neutrinos
2 MW
Recycler /
Main Injector
120 GeV
3-8 GeV Pulsed Linac
H- Source
3 GeV, 1.0 mA CW Linac
Δ
Δ
0.75
MW
Nuclear
1.5
MW
Kaons
0.75
MW
Muons