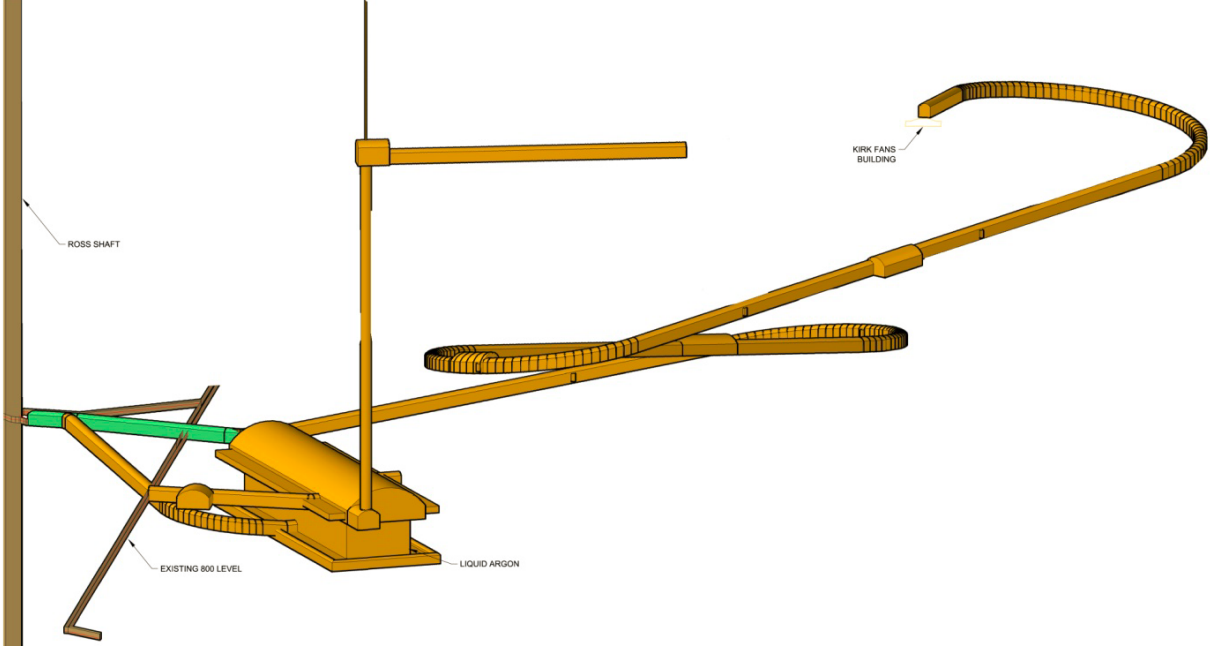
KIRK FANS
BUILDING
ROSS SHAFT
EXISTING 800 LEVEL
LIQUID ARGON