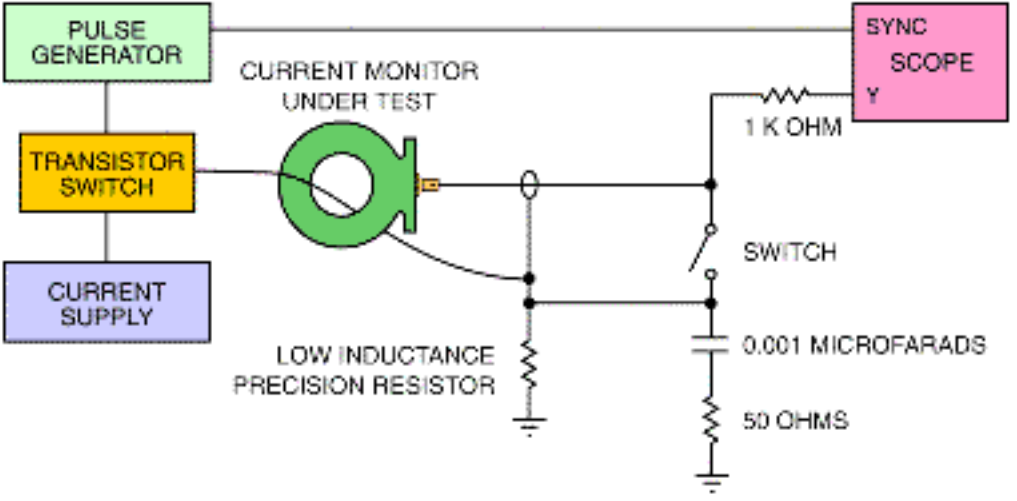
PULSE GENERATOR
SYNC
SCOPE
Y
CURRENT MONITOR UNDER TEST
1 K OHM
TRANSISTOR SWITCH
SWITCH
CURRENT SUPPLY
0.001 MICROFARADS
LOW INDUCTANCE PRECISION RESISTOR
50 OHMS