E949 CsI endcaps

Steve Kettell , BNL

January 27th, 2006

PIENU Collaboration Meeting

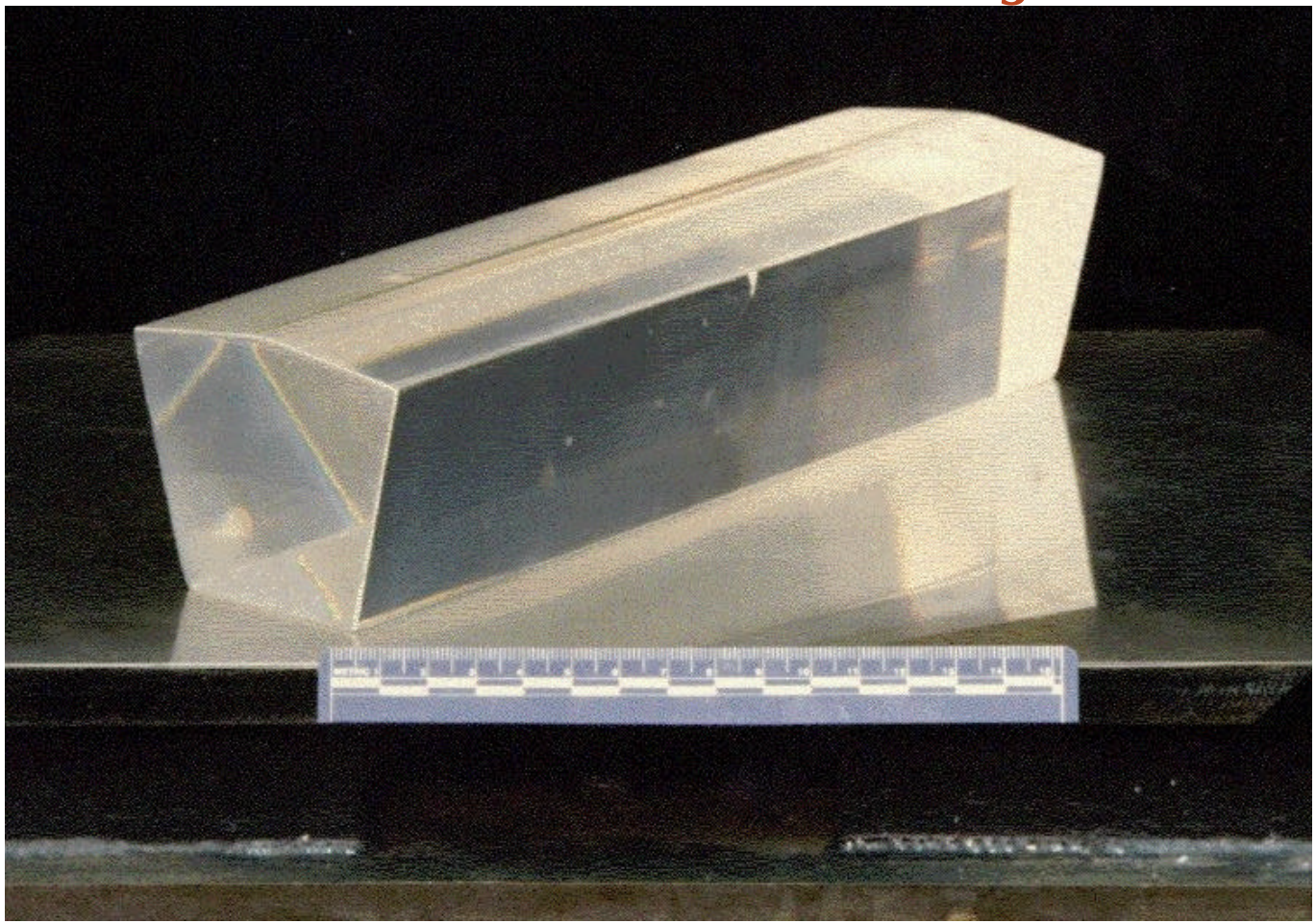

Undoped CsI

- $\rho = 4.5\ g/cm^3$
- $\chi_0 = 1.86$ cm
- $R_M = 3.8$ cm
- Fast: ~45ns @ 310nm; Slow: ~600ns @ 450nm
- F/T ~80% with ~200 p.e./MeV for 5” Quanticon PMT
- With U330 filter and 3” High Field PMT get F/T~86% and ~50p.e./MeV on bench

E949 Detector Overview

PIENU

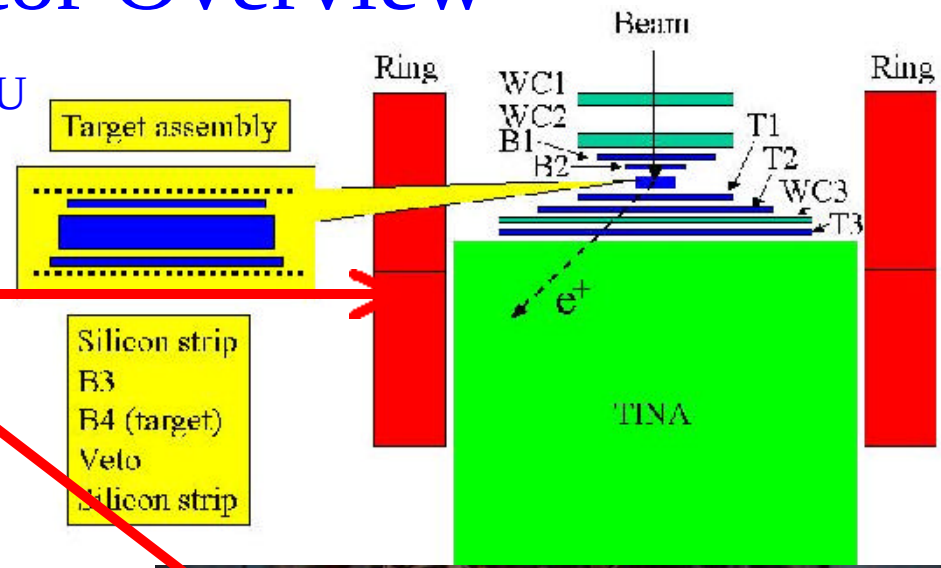

CsI Endcaps

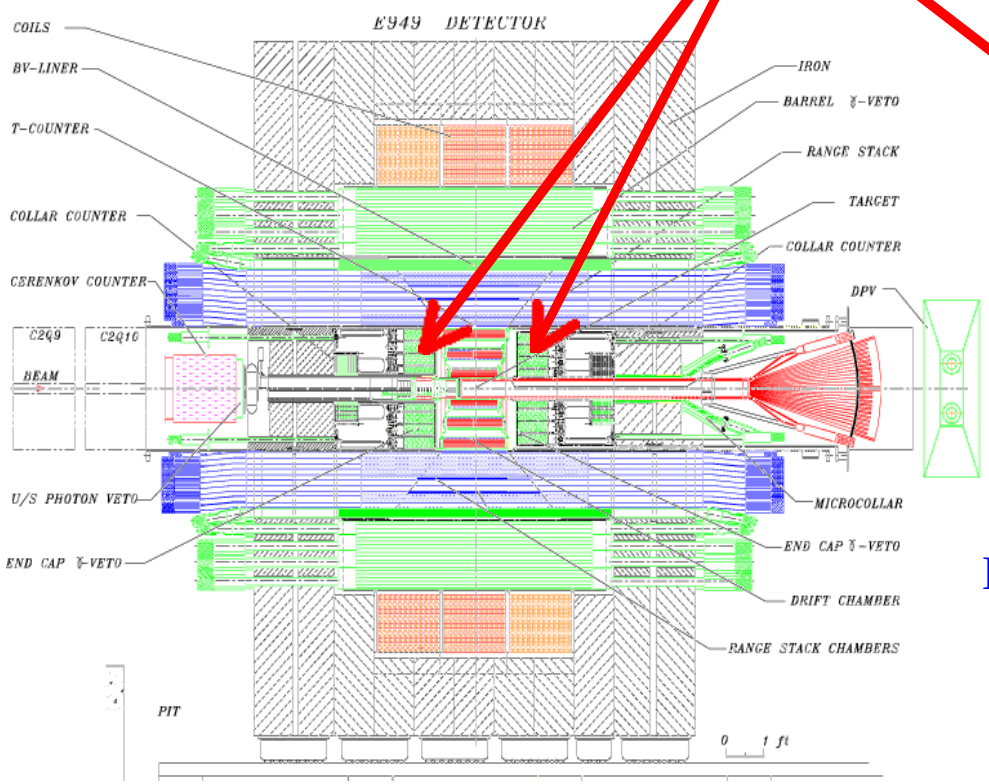

E949

End View

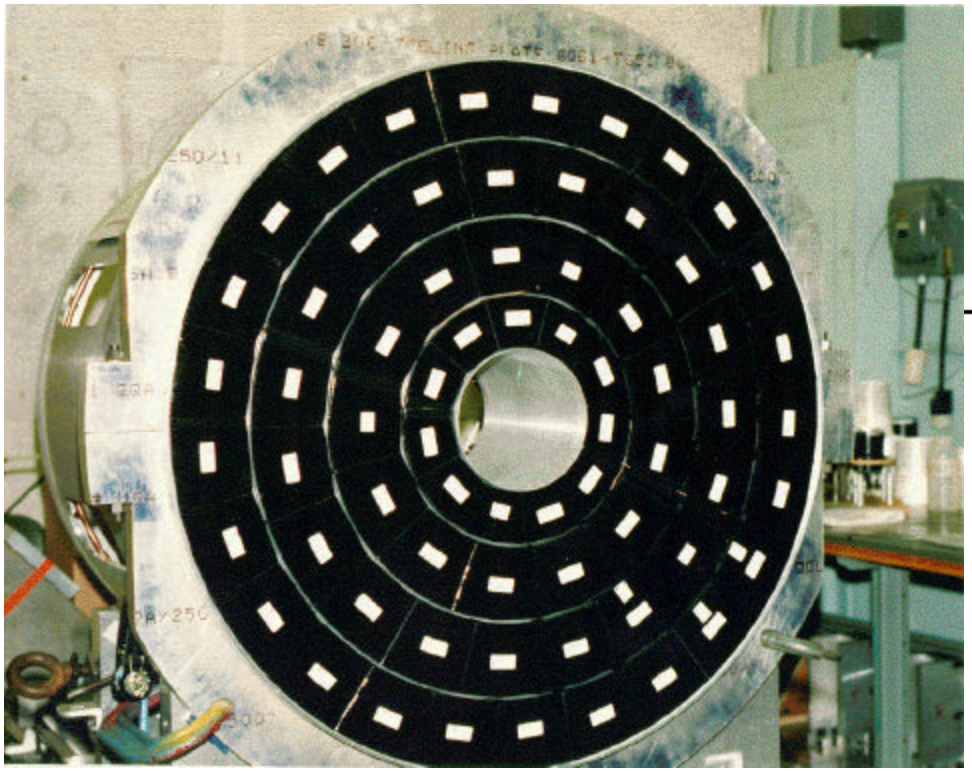

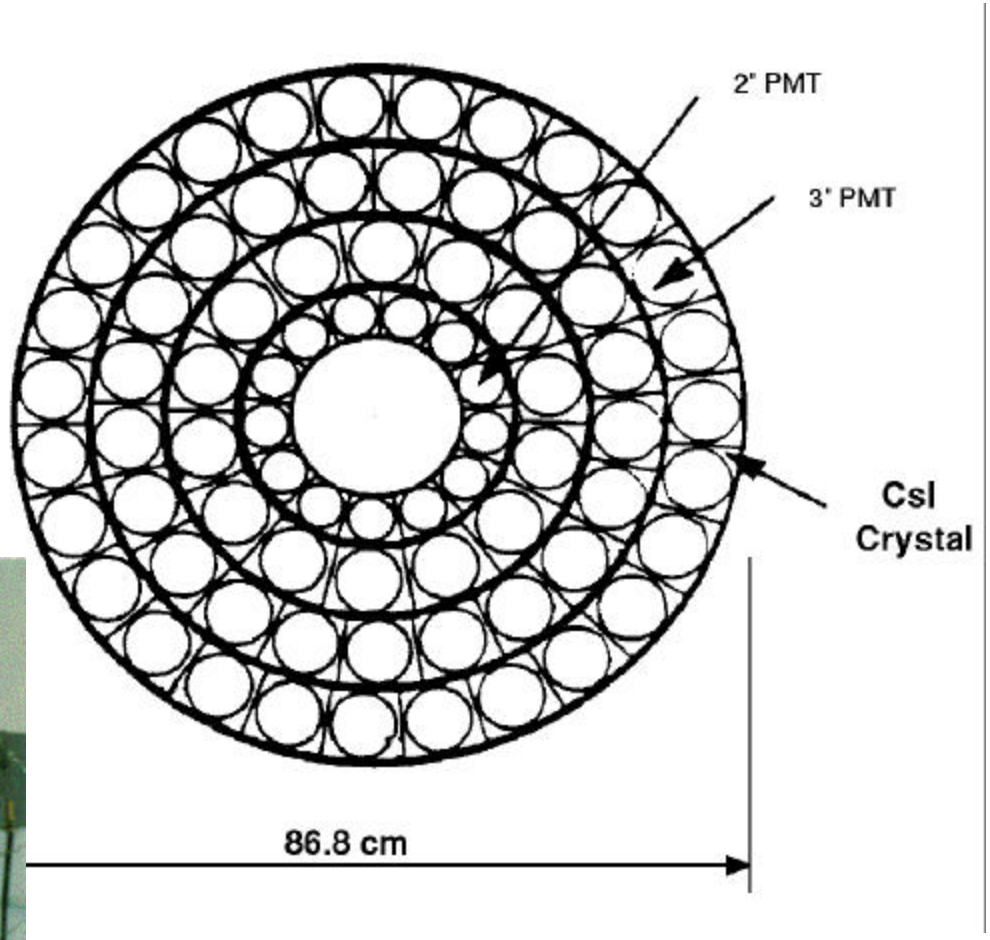

More detail

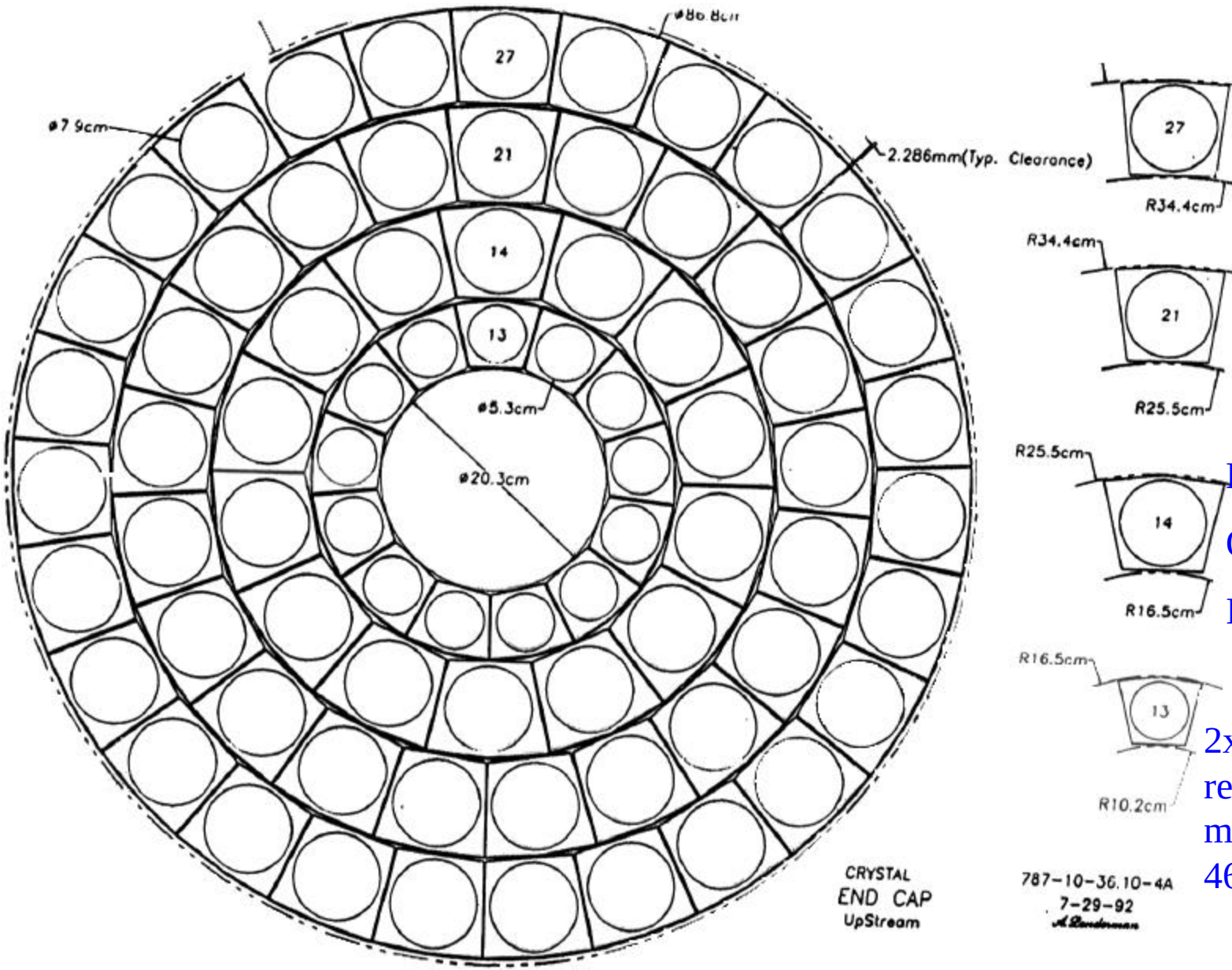

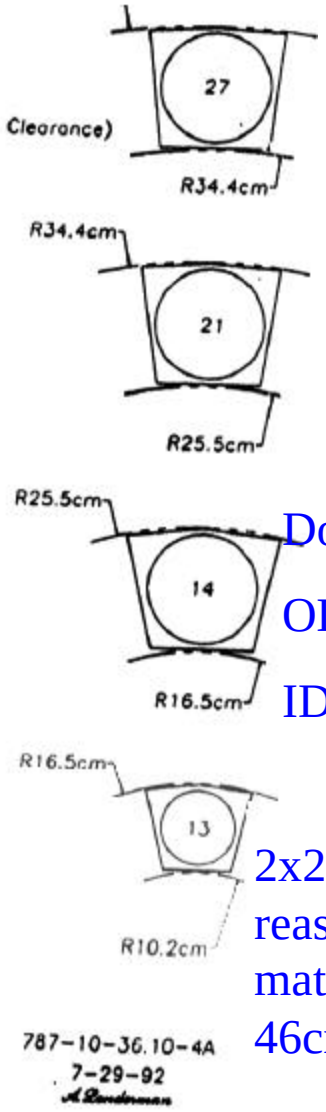

Upstream EC
OD Ring4: 43.4
ID Ring3: 25.5

Downstream EC
OD Ring4: 41.5
ID Ring3: 23.6

2x23.6=47.1cm is reasonably well matched to TINA's 46cm diameter

Assembly View

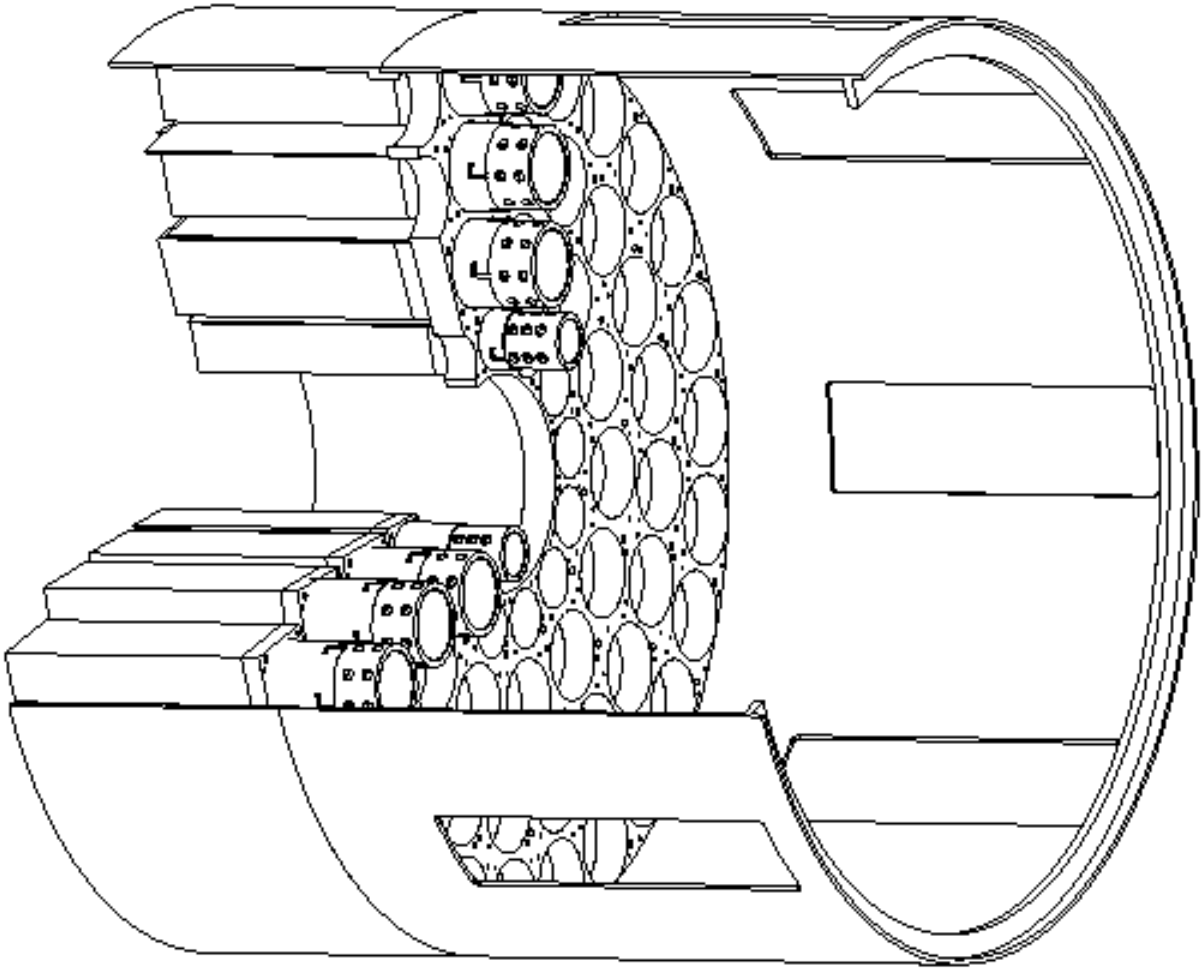

Xtal

	Ring 1	Ring 2-4
A:	7.8-8.0	9.9-11.2
B:	6.1	8.6
C:	25.0	25.0

All dimensions in cm

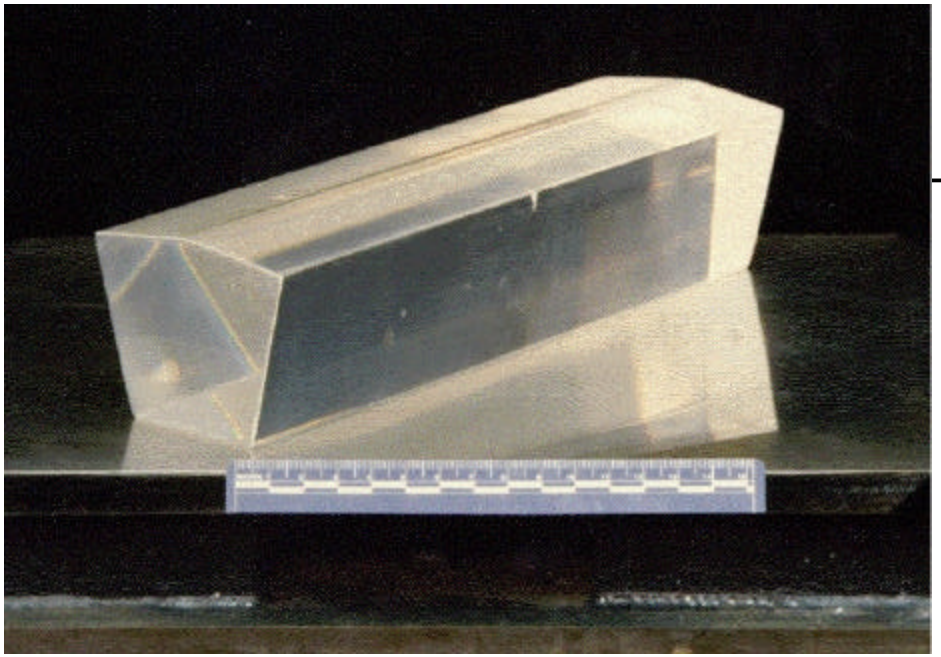

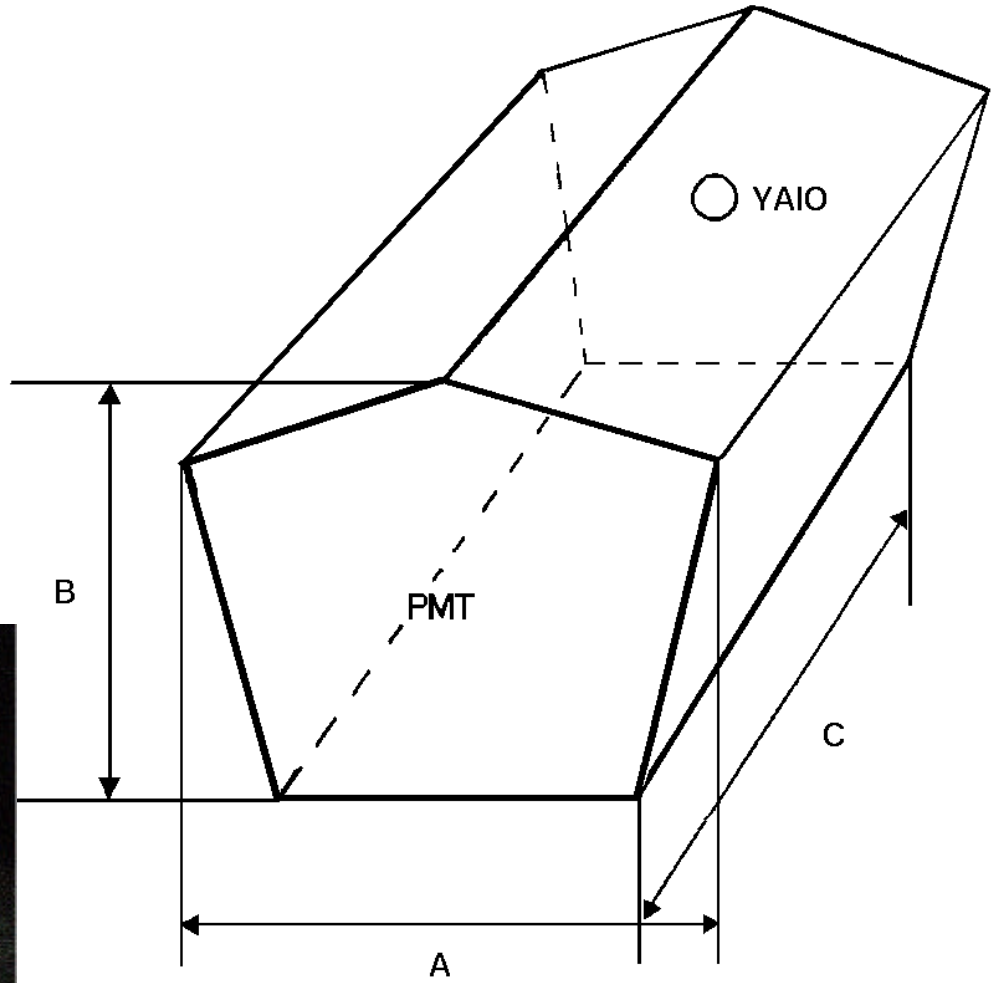

PMT and Mount

Hamamatsu High-Field PMTs R5065mod (R4721mod) are fast, UV-glass, good QE~17%, but poor spe resolution

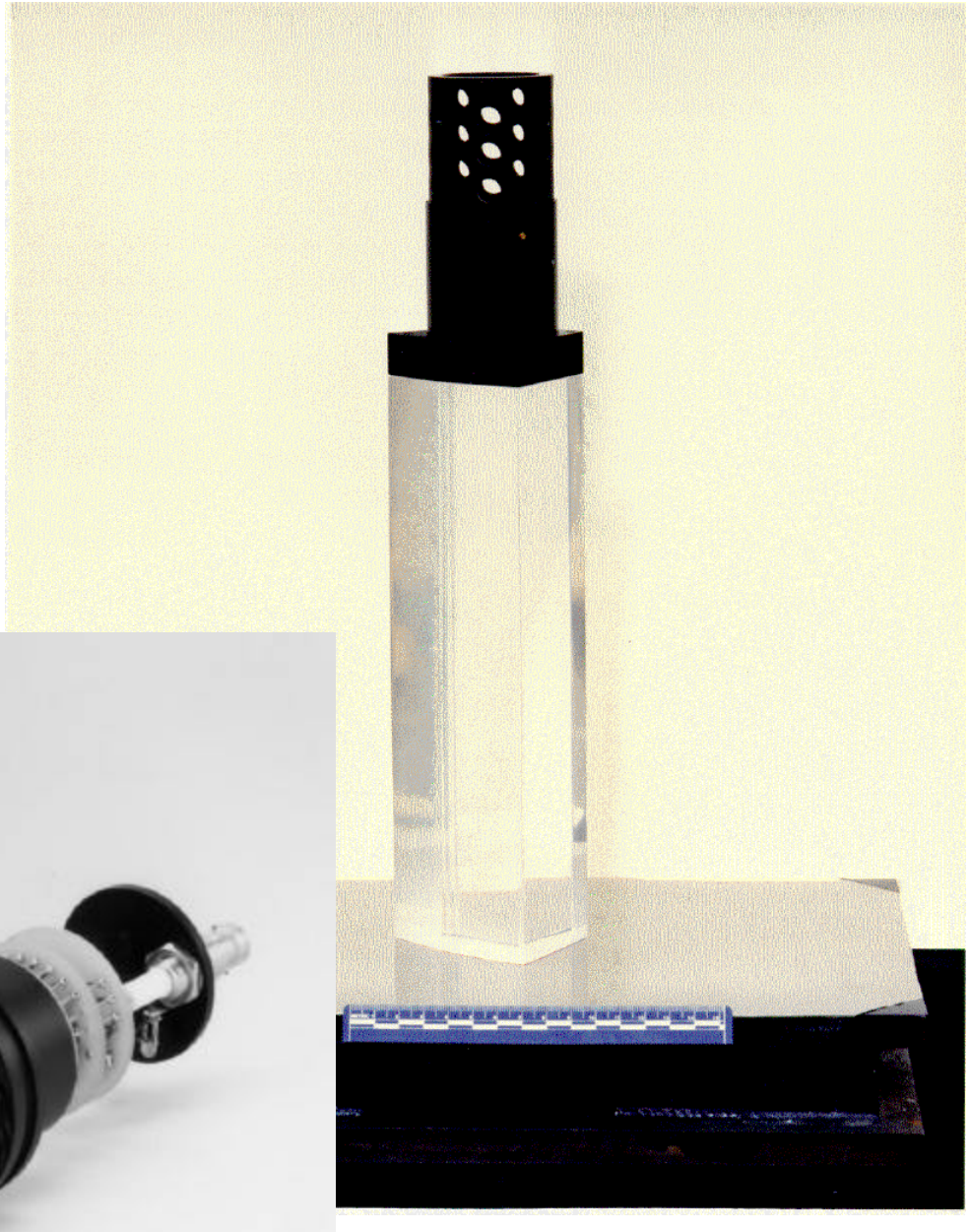

Possible Schedule

Sam Aronson endorsed and forwarded the following to DOE:
"…Some components (endcap vetos) will be lent to TRIUMF before they are sent to Japan. These will be used in a $p^+ \to e^+ n$ *experiment. The need for these components is for 2-3 years, starting in April 2006, after which they will be shipped to Japan."*

- Optimistic: both endcaps removed by 3/31/06
- Less optimistic: remove upstream mid-March and downstream by end of April

- Allow 2 weeks to uncouple EC's from iron?
- Do we remove xtals from EC? 2 weeks (PMT&xtals)? 60 tech-days?
- Packing and shipping…

Backup

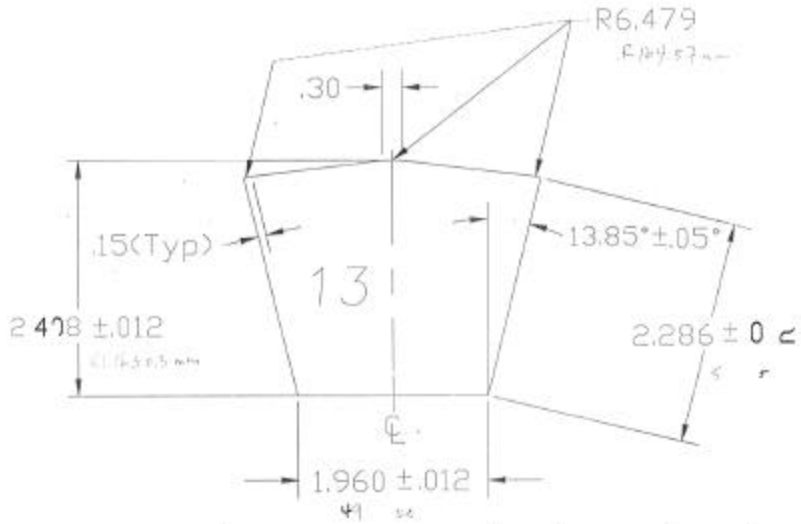

A dimensions Are in inches Upstream Crystal 3
Break A Edges 787 0 36 6 3
Length of Crystal 9.843 6 92
4 Crystals Req d EG

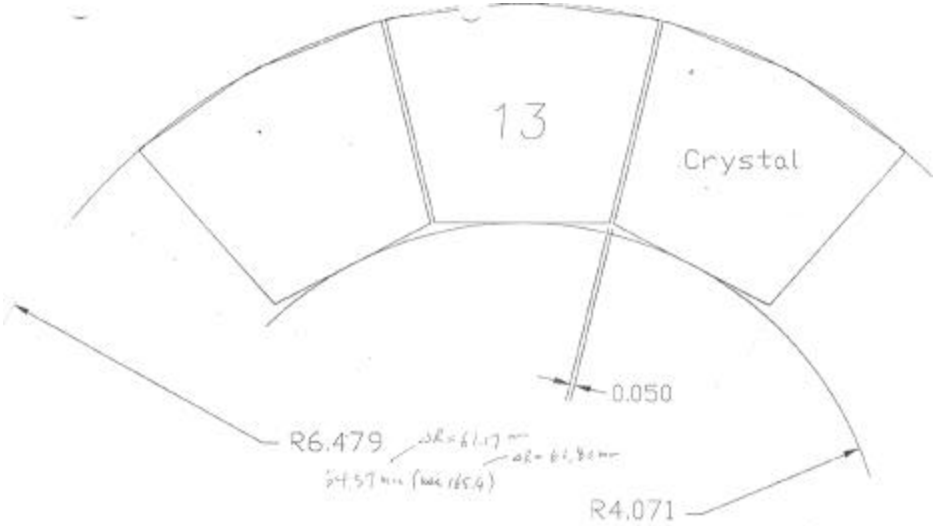

A dimensions Are in inches
3 Crystals Equal Spaced With Separation As Noted
Forming A Complete Ring With Radius Shown
UpStream Crystal 3 Ring 9 92
787 0 36 7 3 EG

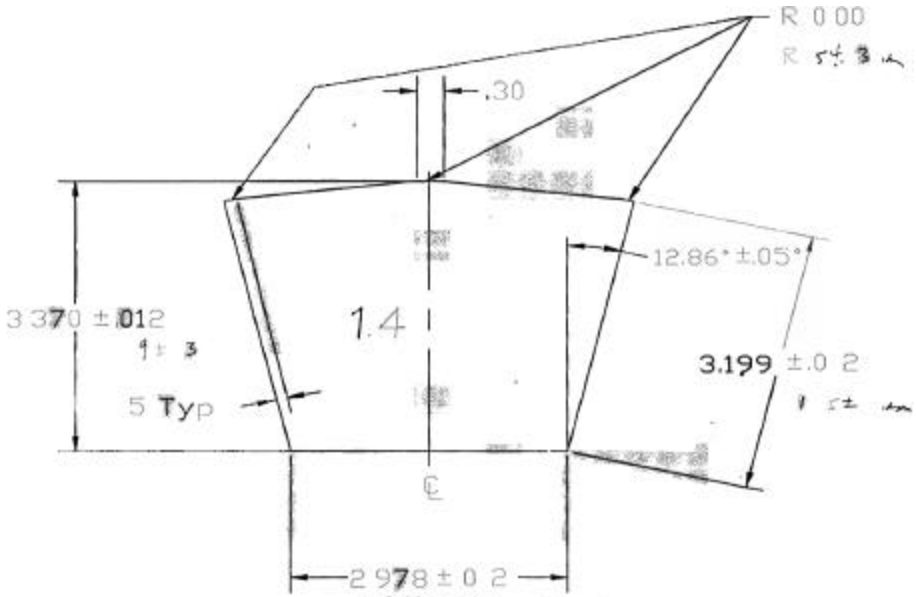

A dimensions Are in inches UpStream Crystal 4
Break A Edge 787- 0 36 4-3
Length Of Crystal 9.843 6 92

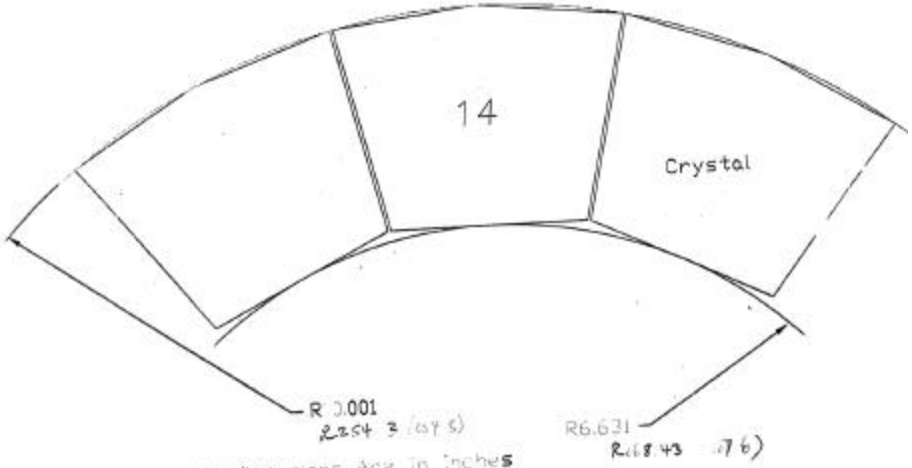

All dimensions Are In Inches
4 Crystals Equal Spaced With Separation As Noted
Forming A Complete Ring With Radius Shown 6 92
UpStream Crystal 4 Ring EG
787 36.15 3

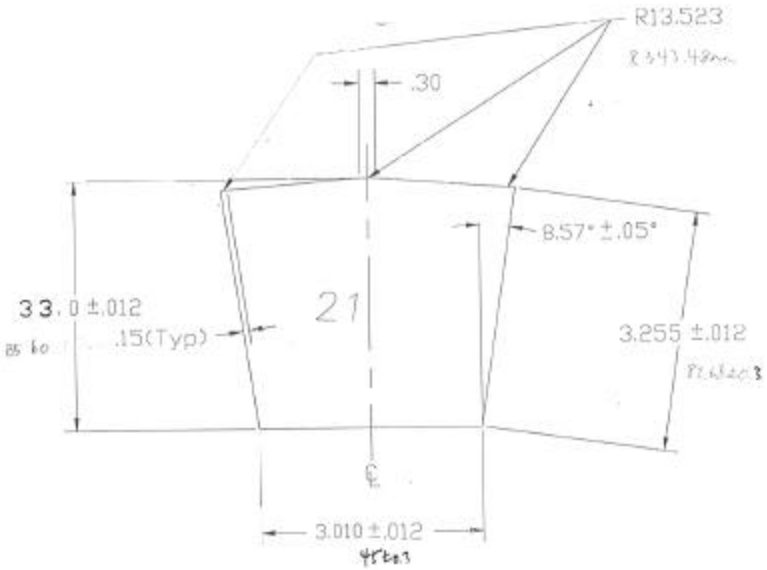

All dimensions Are In Inches
Break All Edges
Length of Crystal 9.843
22 Crystals Req'd

UpStream Crystal 21
787 0 36.12 3
6 92
E.G.

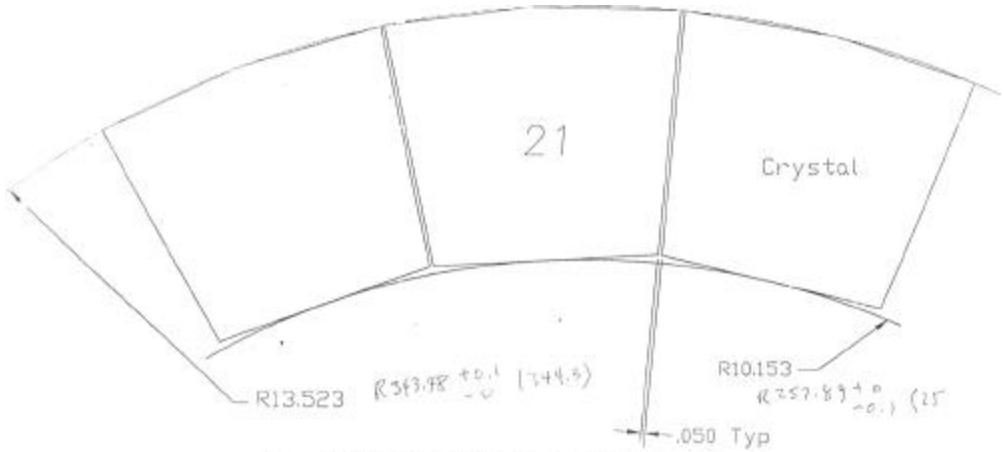

All dimensions Are In Inches
21 Crystals Equally Spaced With Separation As Noted,
Forming A Complete Ring With Radius Shown
UpStream Crystal 21 Ring
787 36.13 3

6 92
E.G.

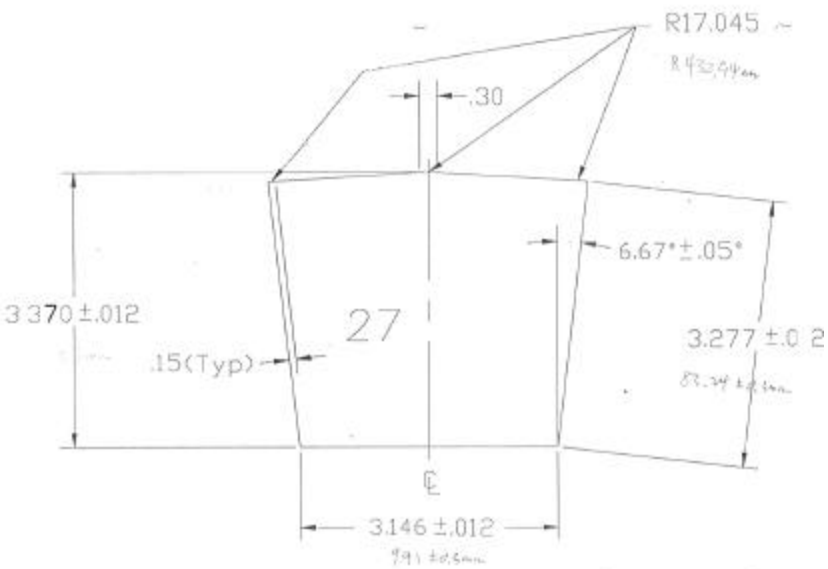

All dimensions Are In Inches
Break All Edges
Length of Crystal 9.843
28 Crystals Req'd

UpStream Crystal 27
787 0 36 0-3
6 92
E.G.

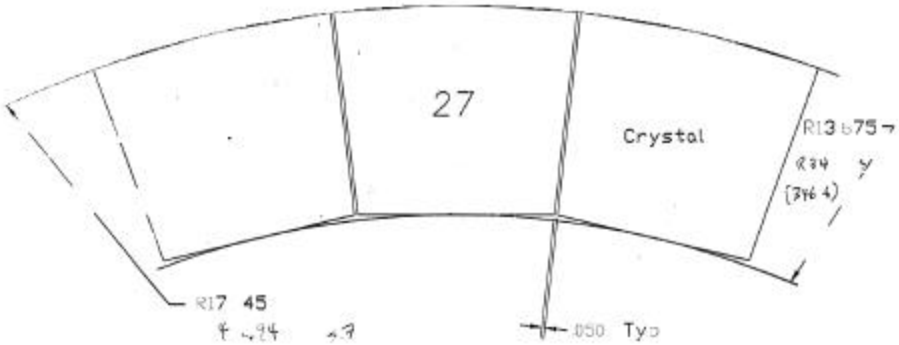

All dimensions Are In Inches
27 Crystals Equally Spaced With Separation As Noted,
Forming A Complete Ring With Radius Shown
UpStream Crystal 27 Ring
787 36.1 3

6 92
E.G.

Photon Veto

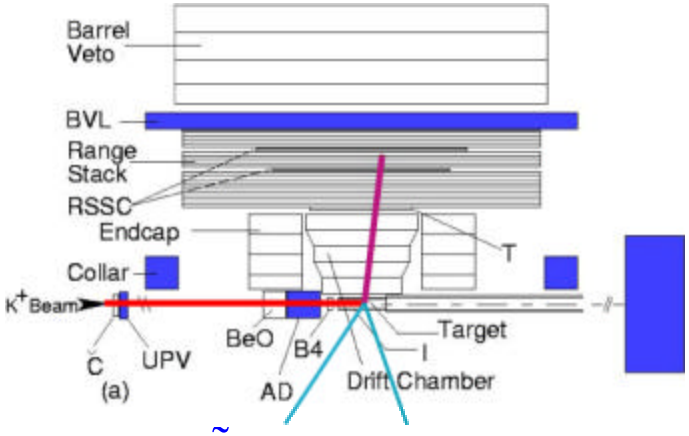

New ã detectors in blue.

Fig :Radiation Length vs polar angle

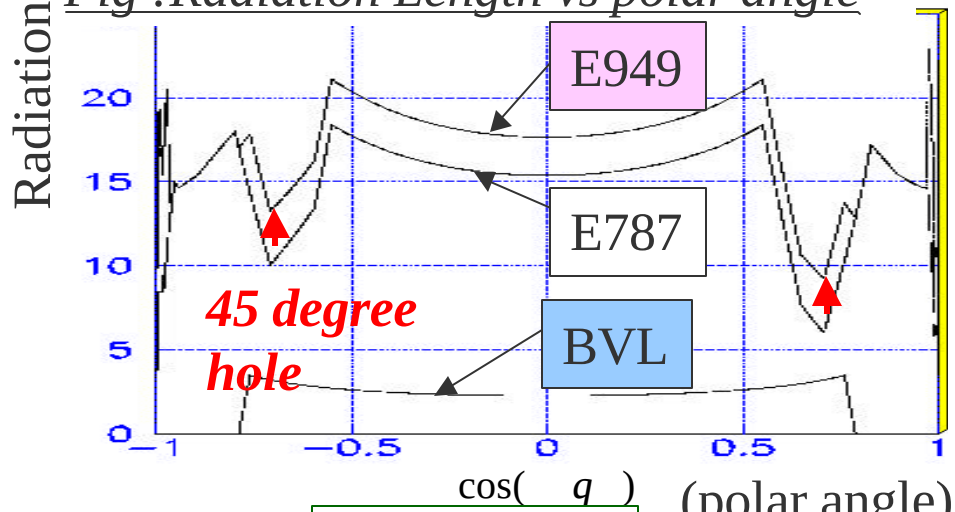

ð^0 rejection

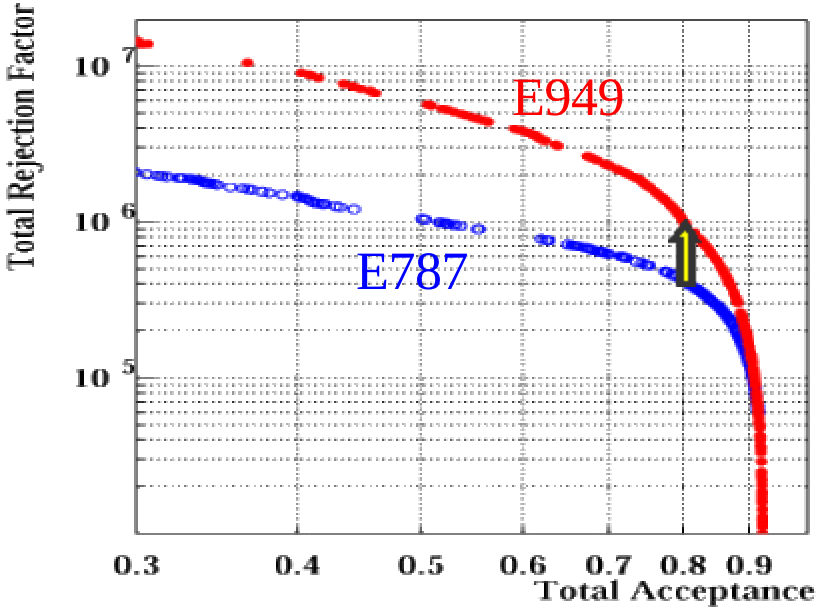

- Rejection of $K_{\pi 2}$ background as a function of acceptance for E787 and E949.
- ×2 better rejection at nominal acceptance (80%)