RSMON related issues

- Current status
- Variables for PASS2 ntuple
- Schedule and work plan

Current Status

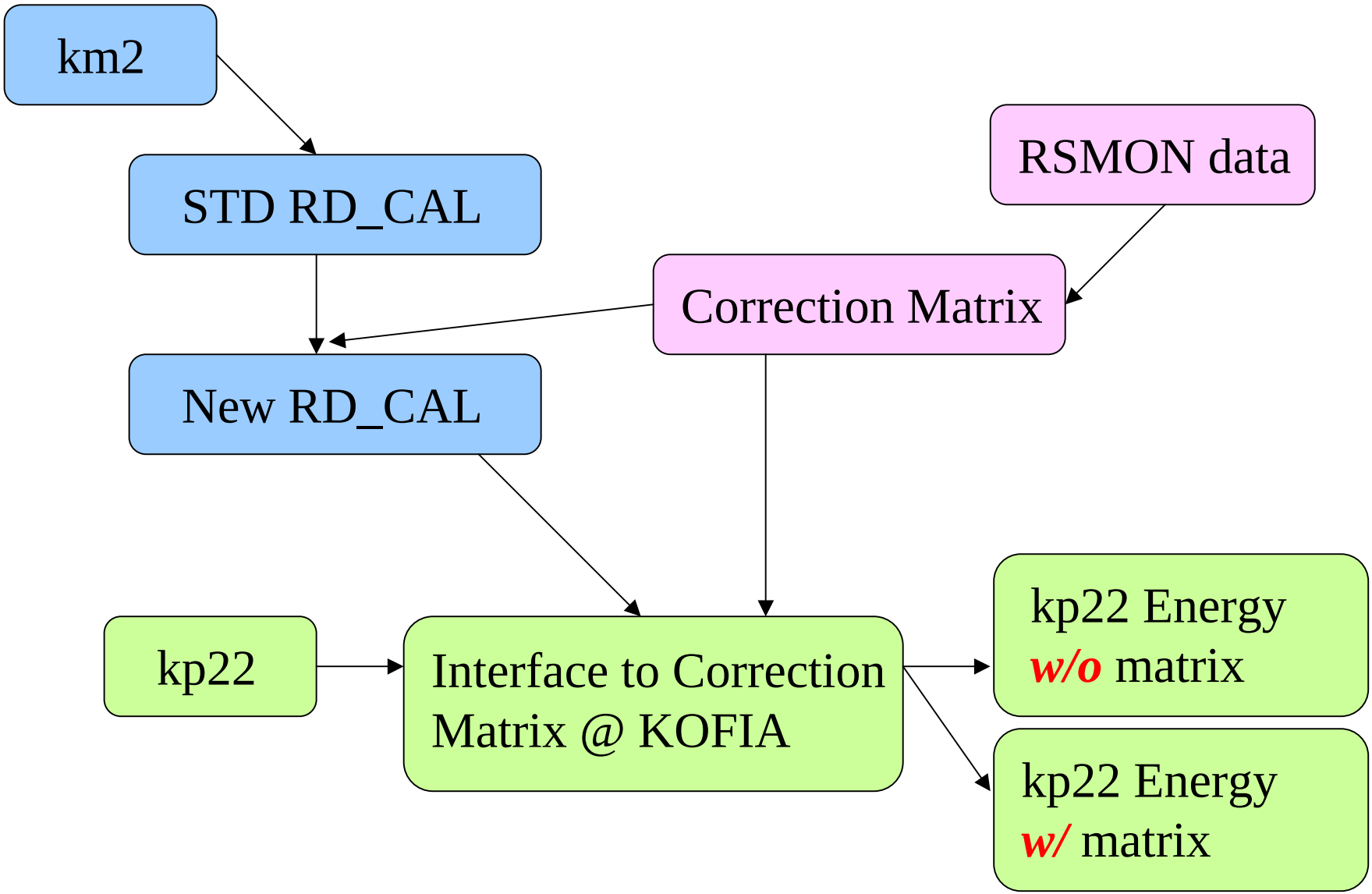

Kp22 w/o Matrix correction

3.995 / 103.1 = 0.0387

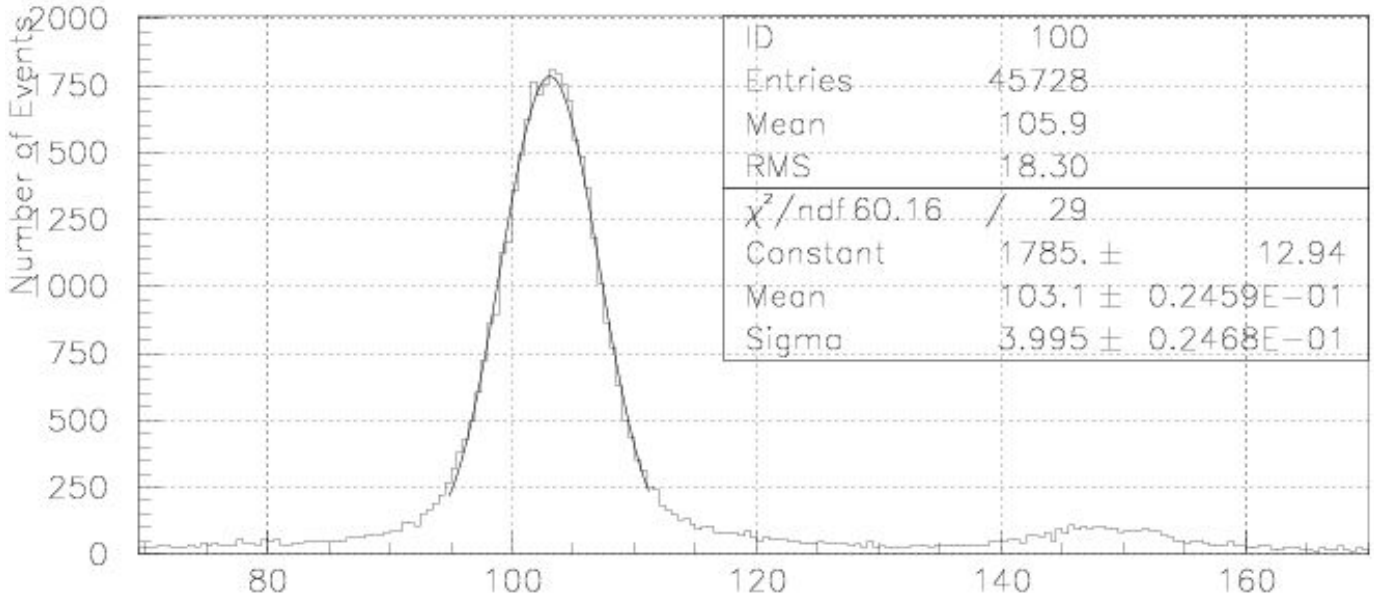

Kp22 w/ Matrix correction

3.890 / 103.6 = 0.0375

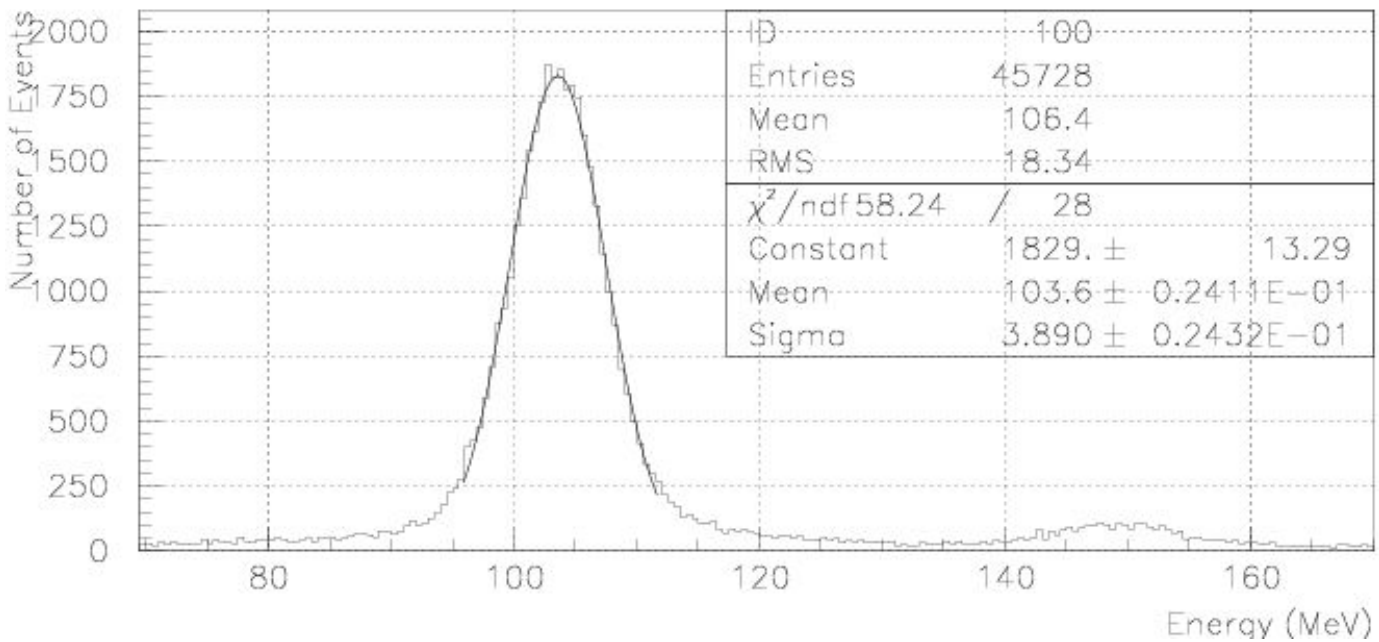

Variables for PASS2 Ntuple

- ADC (PED subtraction mode) values of all RS PMTs (912)
  - Do we need the ADC values of BV/BVL PMTs ?
- ADC values for reference PMT (12)
- Time in Spill
- I-Hung's rate monitor (4)

- Run number
- Spill number
- Event number
- Ck rate, Cpi rate and other scaler values
- (Multi-channel scaler)

Work plan and Schedule

- Variable selection
  - What is the best parameter to describe the rate and spill structure dependency ?
  - Current variables are “Ck rate(3)” (time constants 1.1ms) and “time in spill” (TINSPL_IO)
  - How about “ Ckrate(3) / Ckrate(4)” and “Ckrate(3)” ?
- Ntupe production
  - It takes about 10 minutes to create the RSMON Ntuple for typical size run @ bnlku7. (Typical size of RSMON triggered data is ~ 300 MB, it contains 2~3k events)
  - Its Ntuple size is about 12 MB/run.
- Development of Correction Method
  - Large Correction Matrix
  - Is there any simple function that can describe the gain variation ?

Schedule

- PASS2 variable selection and Preparation of source code
  - 1 week
- Ntuple production
  - Depend on machine resources.
    - 10 min per run
- Development of Correction Method
  - A few months

Distribution of Correction Factor

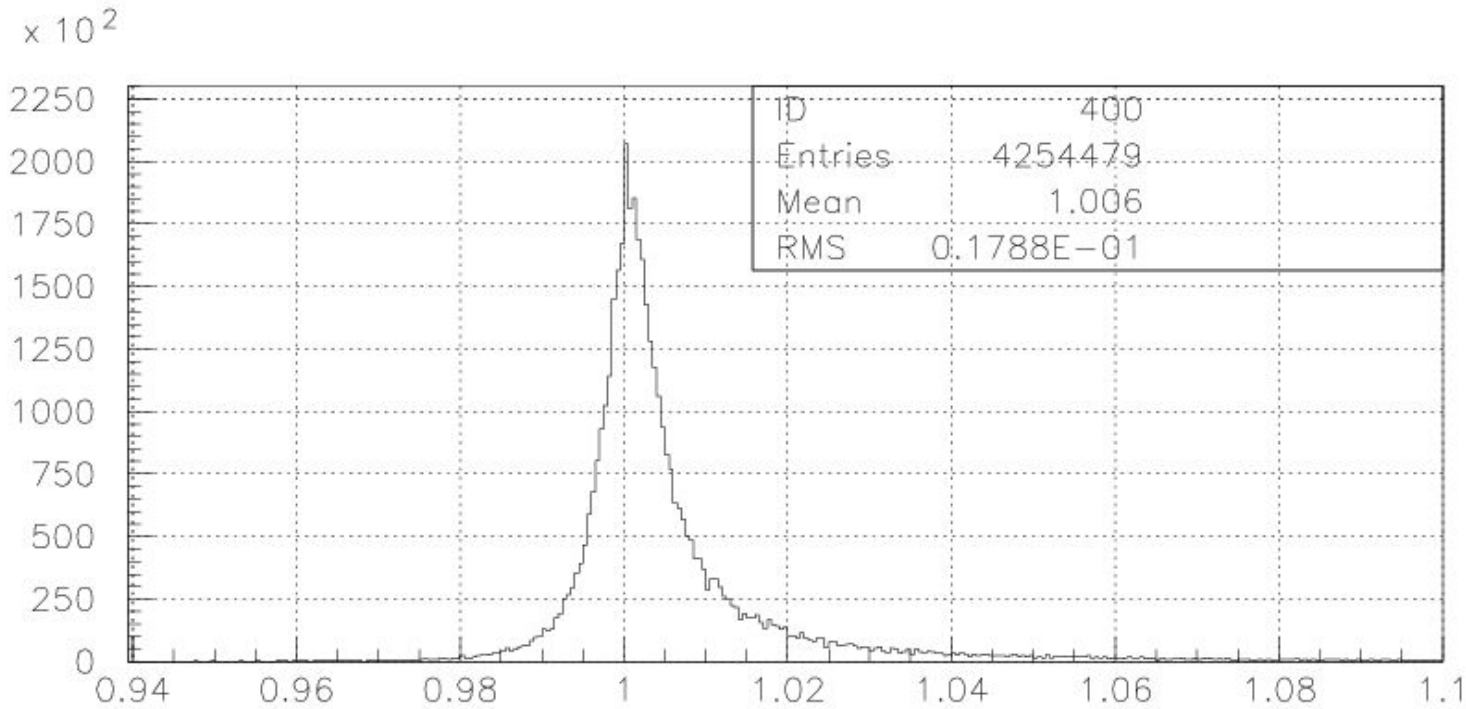

Estimate : sqrt(0.0387 ** 2 – 0.018 ** 2) = 0.0343