ITEM NO.	QTY.	DESCRIPTION	MAT'L DWG. NO. OR BNL NO.

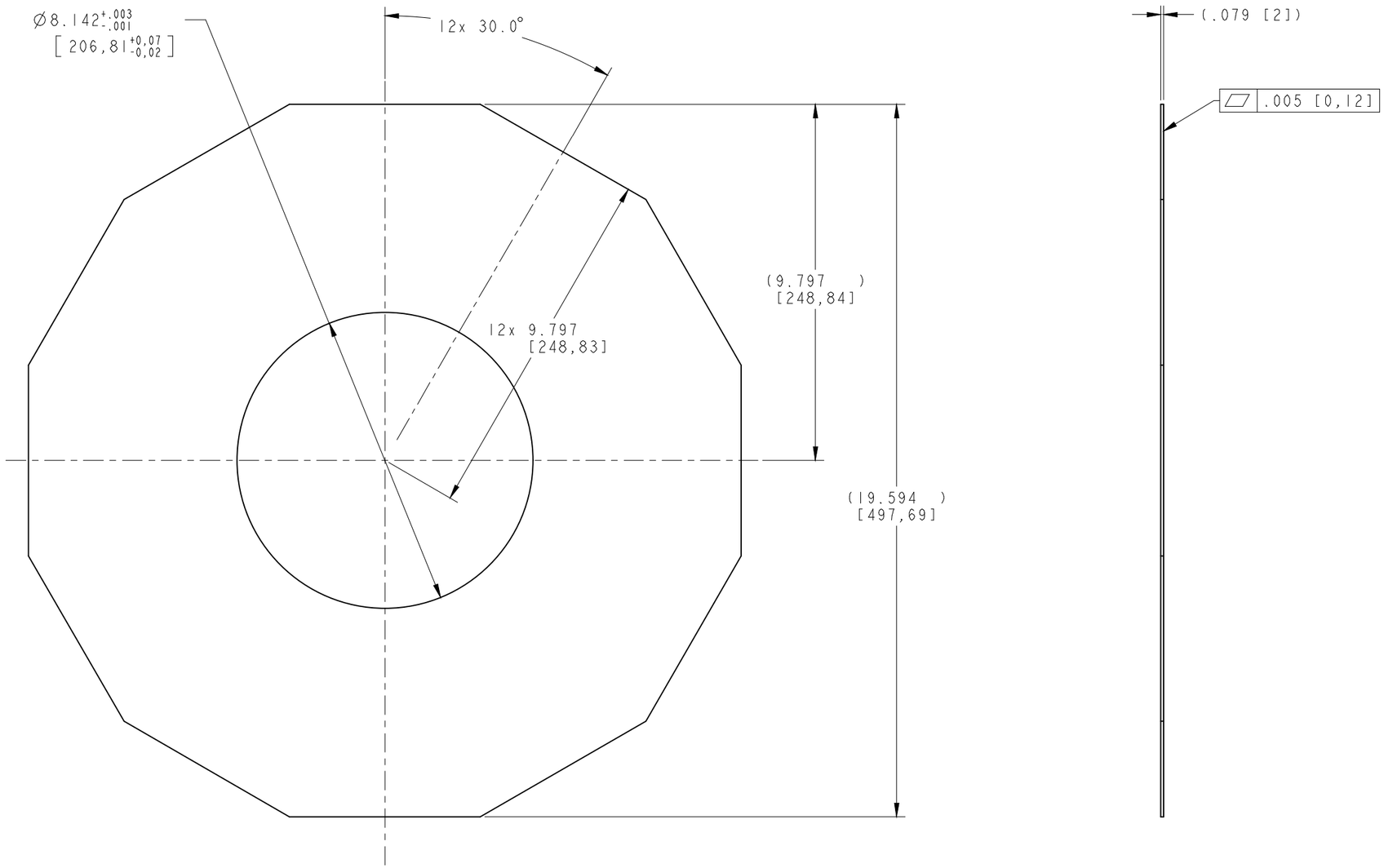

949-10-42.07-3

NOTE:
DIMENSIONS ARE IN INCH [MM]

REV	DESCRIPTION	BY	DATE	CKR	APP

QA: E. GARBER	11/9/00	A-1 ☐ A-2 ☐ A-3 ☐ A-4 ☒		E949-10-41.00	24
		QA CATEGORY		USED ON DWG. NO.	NO. PER. ASSY
DRWN: R. RUGGIERO	11/7/00	ENGR: E. GARBER	11/9/00	BROOKHAVEN NATIONAL LABORATORY UPTON, N.Y. 11973	
CHK: K. LI	11/9/00	SUPV: J. FRANK	11/9/00		
APPVD	DATE	APPVD	DATE		

UNLESS OTHERWISE SPECIFIED
DIMENSIONS AND TOLERANCES ARE IN INCHES

Decimals .X	±.030	Fractions 0-20	±1/64
Decimals .XX	±.015	Fractions > 20	±1/32
Decimals .XXX	±.005	Break Edges Min.	.005
Angular	±0.5°	Break Edges Max.	.015
Finish		Weight (lbs)	

TITLE
E-949 DETECTOR
UPSTREAM PHOTON VETO COLLAR
LEAD RING

MAT'L: 2mm THK. LEAD — SCALE: .50

SHEET NO.	DRAWING NUMBER	REV.
SHEET of	949-10-42.07-3	A