ITEM NO.	QTY.	DESCRIPTION	MAT'L DWG. NO. OR BNL NO.

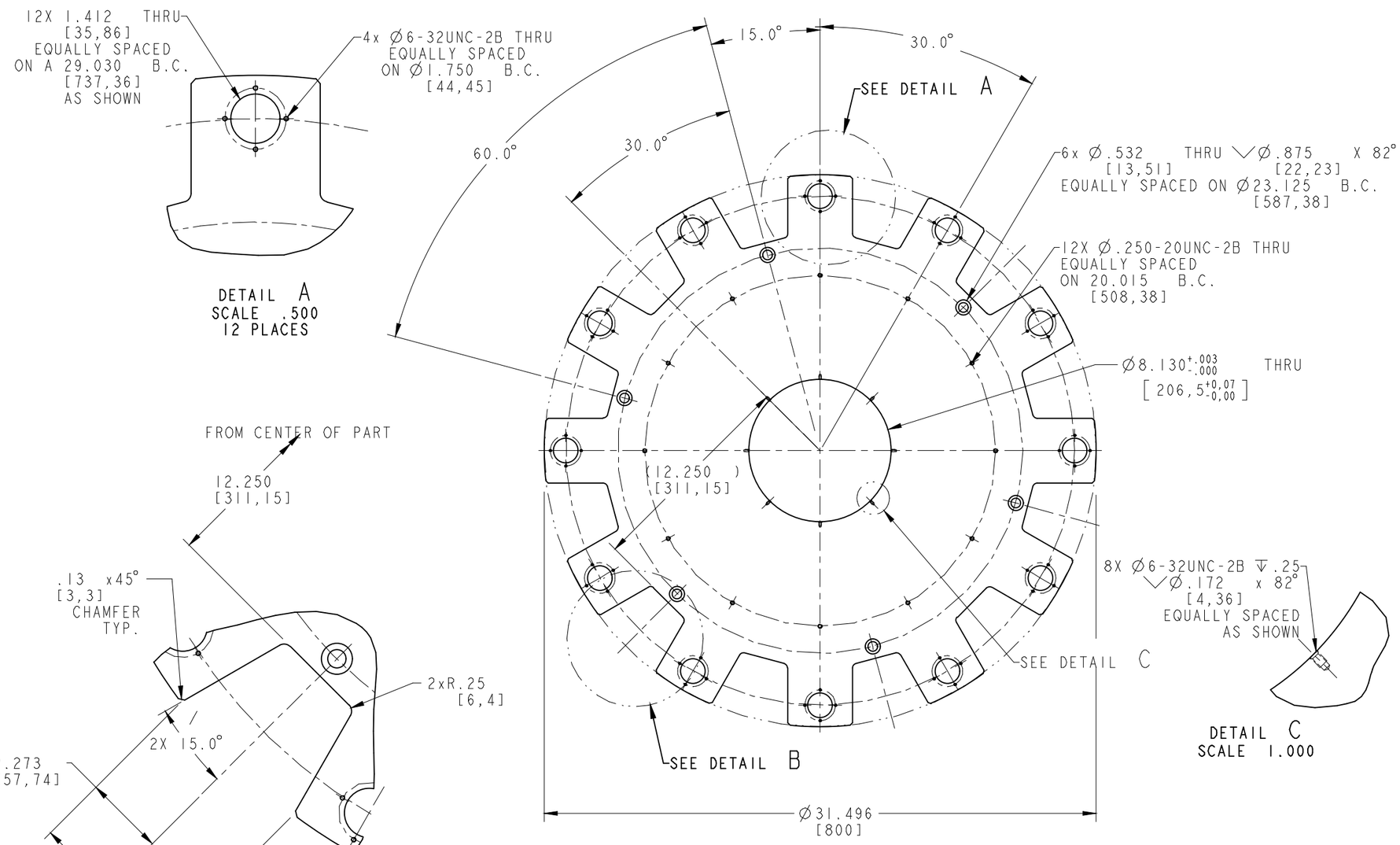

949-10-42.01-3

NOTE:
ALL DIMENSIONS ARE IN INCH [MM]

QA: E. GARBER	11/7/00	A-1 ☐ A-2 ☐ A-3 ☐ A-4 ☒		949-10-41.00-5
		QA CATEGORY		USED ON DWG. NO.
DRWN: R. RUGGIERO	11/3/00	ENGR: E. GARBER	11/7/00	
CHK: K. LI	11/7/00	SUPV: J. FRANK	11/7/00	
APPVD	DATE	APPVD	DATE	

NO. PER. ASSY: 1

UNLESS OTHERWISE SPECIFIED
DIMENSIONS AND TOLERANCES ARE IN INCHES

Decimals .X	±.030	Fractions 0-20	±1/64
Decimals .XX	±.015	Fractions > 20	±1/32
Decimals .XXX	±.005	Break Edges Min.	.005
Angular	±0.5°	Break Edges Max.	.015
Finish		Weight (lbs)	

BNL BROOKHAVEN NATIONAL LABORATORY
UPTON, N.Y. 11973

TITLE
E-949 DETECTOR
UPSTREAM PHOTON VETO COLLAR
BASE PLATE

MAT'L: .375 THK. STAINLESS STEEL | SCALE: .25

SHEET 1 of 1	949-10-42.01-3	A
SHEET NO.	DRAWING NUMBER	REV.

REV	DESCRIPTION	BY	DATE	CKR	APP