REV.	ZONE	DESCRIPTION	BY	DATE	CHK	APP

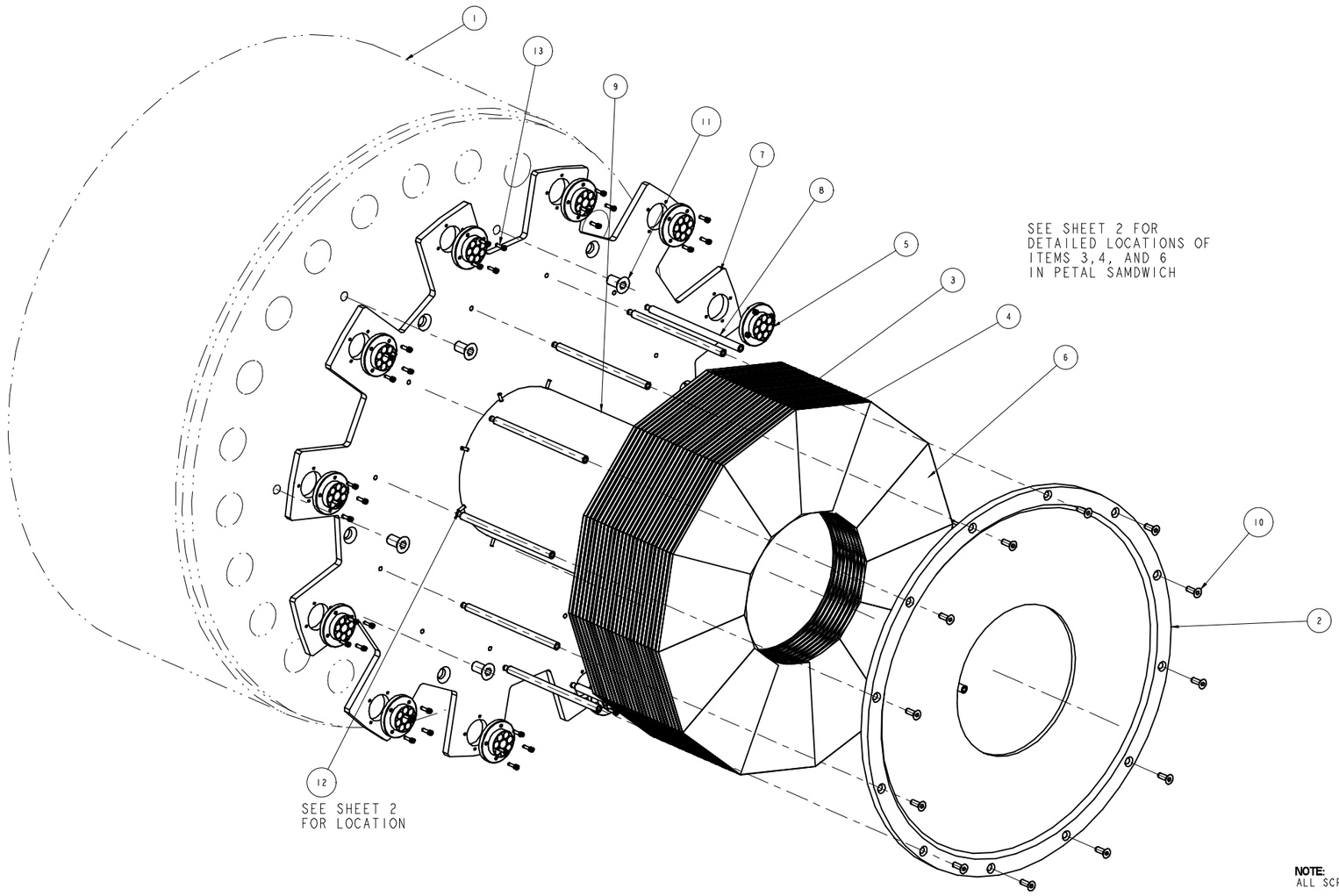

NOTE:
ALL SCREWS ARE AMERICAN STANDARD

DET	QTY	DESCRIPTION	TYPE	MATR'L., DWG. NO. OR BNL NO.
13	48	SHCS-6-32_UNC-2A_X_.500_LG	PART	
12	8	FHCS-6-32_UNC-2A_X_.500_LG	PART	
11	6	FHCS-500-13_UNC-2A_X_1_LG	PART	
10	12	FHCS-250-20_UNC-2A_X_.750_LG	PART	
9	1	E949-TUBE	PART	949-10-42.06
8	12	E949-STANDOFF	PART	949-10-42.03
7	1	E949-SST-BASE-PLATE	PART	949-10-42.01
6	300	E949-SCINTILLATOR-SLICE	PART	949-10-42.08
5	12	E949-NORYL-FIBER-HOLDER	PART	949-10-42.02
4	50	E949-MYLAR-RING	PART	949-10-42.05
3	24	E949-LEAD-RING	PART	949-10-42.07
2	1	E949-COVER	PART	949-10-42.04
1	1	E787-IRON	PART	787-02-05.45

QTY PER ASSEMBLY

QA: E. GARBER 11/9/00
DRWN: R. RUGGIERO 11/8/00
CHK: K. LI 11/9/00
APPVD DATE

A-1 ☐ A-2 ☐ A-3 ☐ A-4 ☒
QA CATEGORY
ENGR: E. GARBER 11/9/00
SUPV: J. FRANK 11/9/00
APPVD DATE

UNLESS OTHERWISE SPECIFIED:
DIMENSIONS AND TOLERANCES ARE MM [IN]
INTERPRET AS ASME Y14.5M-1994

Decimals X. [X.X]	±.76 [.030]	Fractions 0-20	±1 [1/32]
Decimals X.X [X.XX]	±.38 [.015]	Fractions > 20	±3 [1/8]
Decimals X.XX [X.XXX]	±.13 [.005]	Break Edges Min.	0.13 [.005]
Angular	±0.5°	Break Edges Max.	0.38 [.015]
Finish ✓	3.2 [125]	Weight (kg) [lbs]	

SCALE .500

USED ON DWG. NO.

BROOKHAVEN NATIONAL LABORATORY
UPTON, N.Y. 11973

E949 DETECTOR
PHOTON VETO COLLAR - UPSTREAM
ASSEMBLY

SHEET 1/2 | ASSEM | Scale: .500
SIZE E | DRAWING NUMBER 949-10-42.00 -5 | REV. A

Notes: Unless otherwise specified:

#Pro/E