| ITEM NO. | QTY. | DESCRIPTION | MAT'L DWG. NO. OR BNL NO. |
|---|---|---|---|
| | | | |

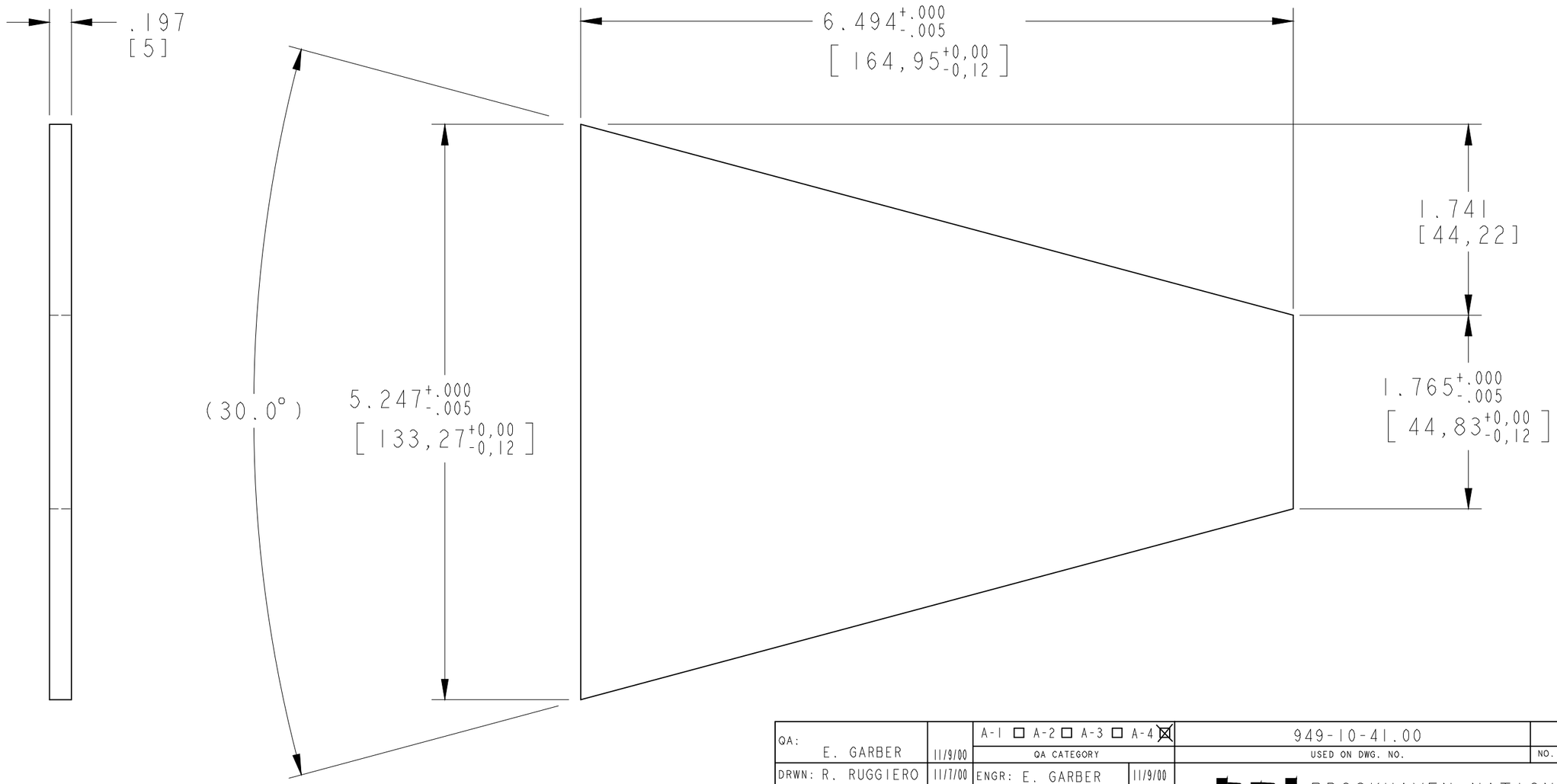


**NOTE:**
**DIMENSIONS ARE IN INCH [MM]**

| | | | |
|---|---|---|---|
| QA: E. GARBER | 11/9/00 | A-1 ☐ A-2 ☐ A-3 ☐ A-4 ☒ QA CATEGORY | |
| DRWN: R. RUGGIERO | 11/7/00 | ENGR: E. GARBER | 11/9/00 |
| CHK: K. LI | 11/9/00 | SUPV: J. FRANK | 11/9/00 |
| APPVD | DATE | APPVD | DATE |

UNLESS OTHERWISE SPECIFIED
DIMENSIONS AND TOLERANCES ARE IN INCHES

| | | | |
|---|---|---|---|
| Decimals .X | ±.030 | Fractions 0-20 | ±1/64 |
| Decimals .XX | ±.015 | Fractions > 20 | ±1/32 |
| Decimals .XXX | ±.005 | Break Edges Min. | .005 |
| Angular | ±0.5° | Break Edges Max. | .015 |
| Finish | 125 | Weight (lbs) | |

| | |
|---|---|
| 949-10-41.00 | 300 |
| USED ON DWG. NO. | NO. PER. ASSY |

BROOKHAVEN NATIONAL LABORATORY
UPTON, N.Y. 11973

TITLE
E-949 DETECTOR
DOWNSTREAM PHOTON VETO COLLAR
SCINTILATOR PETAL

MAT'L: SCINTILLATOR | SCALE: 1.0

| SHEET | of | DRAWING NUMBER | REV. |
|---|---|---|---|
| | | 949-10-41.08-2 | A |
| SHEET NO. | | | |

| REV | DESCRIPTION | BY | DATE | CKR | APP |
|---|---|---|---|---|---|