ITEM NO.	QTY.	DESCRIPTION	MAT'L DWG. NO. OR BNL NO.
2			

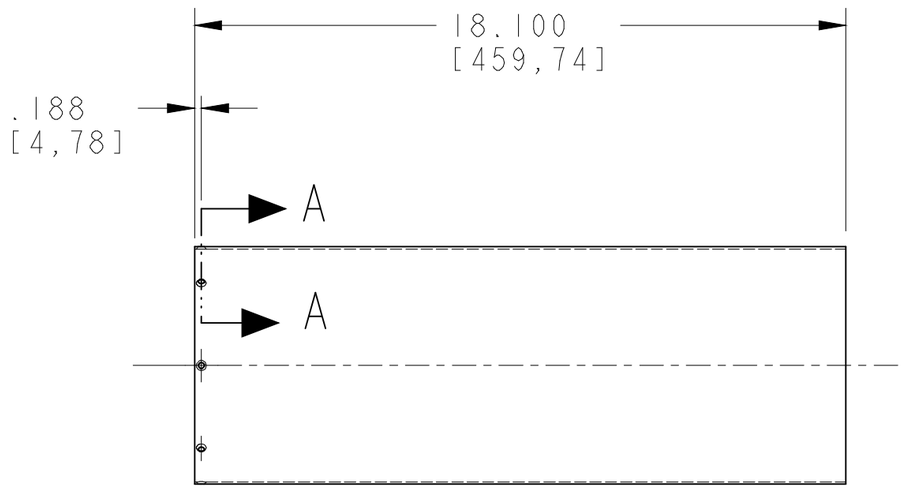

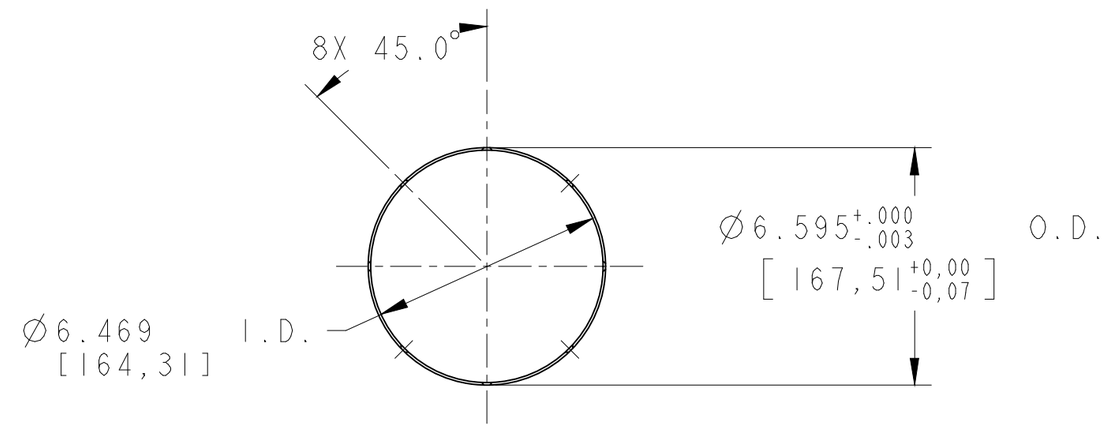

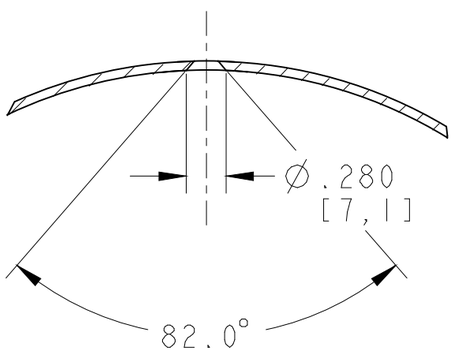

SECTION A-A
SCALE 1.000
8 PLACES
EQUALLY SPACED AS SHOWN

NOTE:
DIMENSIONS ARE IN INCH [MM]

QA: E. GARBER	11/9/00	A-1 ☐ A-2 ☐ A-3 ☐ A-4 ☒ QA CATEGORY	
DRWN: R. RUGGIERO	11/7/00	ENGR: E. GARBER	11/9/00
CHK: K. LI	11/9/00	SUPV: J. FRANK	11/9/00
APPVD	DATE	APPVD	DATE

UNLESS OTHERWISE SPECIFIED
DIMENSIONS AND TOLERANCES ARE IN INCHES

Decimals .X	±.030	Fractions 0-20	±1/64
Decimals .XX	±.015	Fractions > 20	±1/32
Decimals .XXX	±.005	Break Edges Min.	.005
Angular	±0.5°	Break Edges Max.	.015
Finish	125	Weight (lbs)	

E949-10-41.00	1
USED ON DWG. NO.	NO. PER. ASSY

BROOKHAVEN NATIONAL LABORATORY
UPTON, N.Y. 11973

TITLE
E-949 DETECTOR
DOWNSTREAM PHOTON VETO COLLAR
TUBE

MAT'L: ALUMINUM 6061-T6 SCALE: .25

SHEET of	DRAWING NUMBER	REV.
SHEET NO.	949-10-41.06-2	A

REV	DESCRIPTION	BY	DATE	CKR	APP