ITEM NO.	QTY.	DESCRIPTION	MAT'L DWG. NO. OR BNL NO.

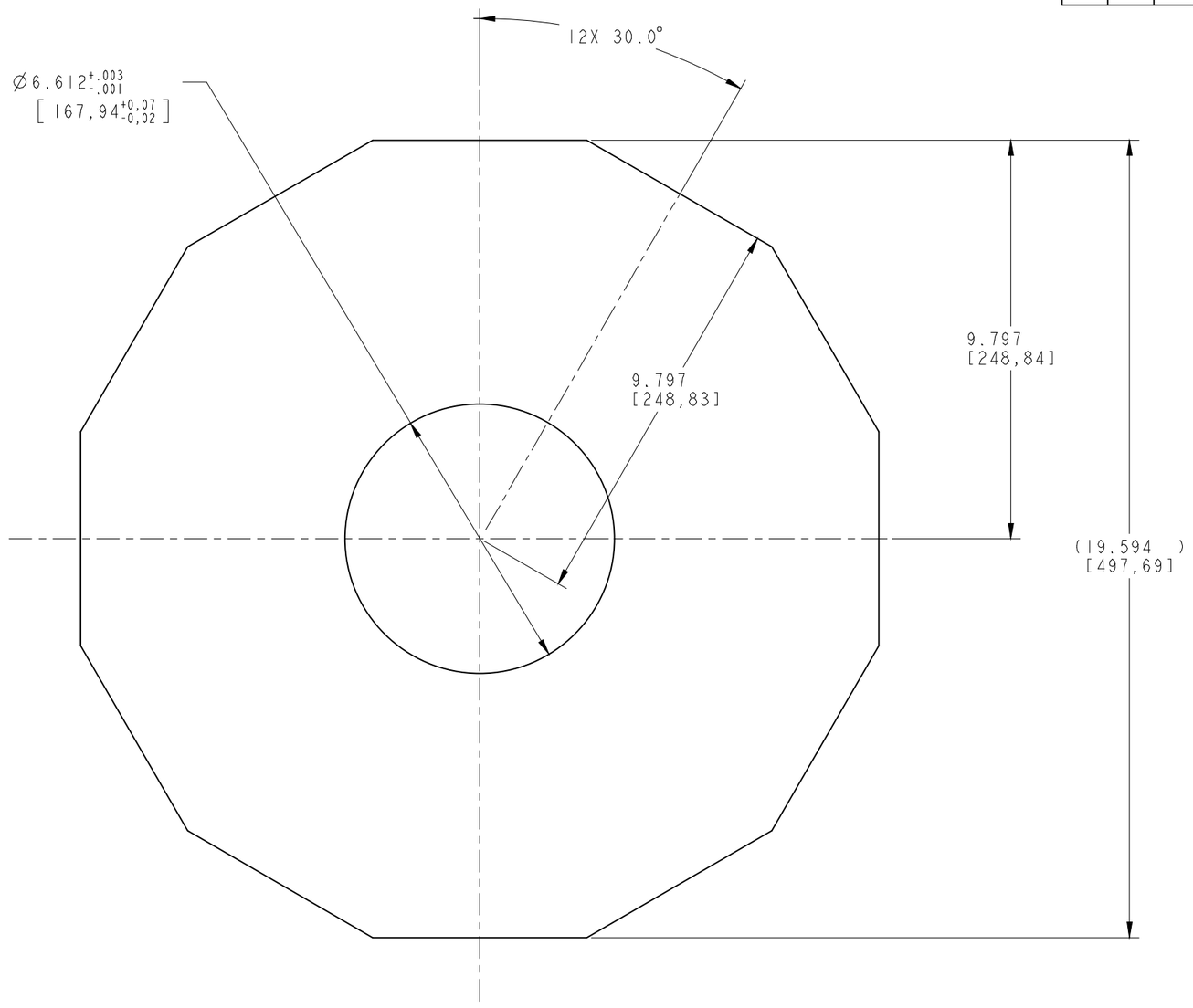

949-10-41.05-3

NOTE:
DIMENSIONS ARE IN INCH [MM]

REV	DESCRIPTION	BY	DATE	CKR	APP

QA: E. GARBER	11/9/00	A-1 ☐ A-2 ☐ A-3 ☐ A-4 ☒ QA CATEGORY		E949-10-41.00 USED ON DWG. NO.	50 NO. PER. ASSY
DRWN: R. RUGGIERO	11/7/00	ENGR: E. GARBER	11/9/00	BNL BROOKHAVEN NATIONAL LABORATORY UPTON, N.Y. 11973	
CHK: K. LI	11/9/00	SUPV: J. FRANK	11/9/00		
APPVD	DATE	APPVD	DATE		
UNLESS OTHERWISE SPECIFIED DIMENSIONS AND TOLERANCES ARE IN INCHES				TITLE	
Decimals .X	±.030	Fractions 0-20	±1/64	E-949 DETECTOR	
Decimals .XX	±.015	Fractions > 20	±1/32	DOWNSTREAM PHOTON VETO COLLAR	
Decimals .XXX	±.005	Break Edges Min.	.005	MYLAR RING	
Angular	±0.5°	Break Edges Max.	.015	MAT'L: .001 THK. ALUMINIZED MYLAR	SCALE: .50
Finish		Weight (lbs)		SHEET of	949-10-41.05-3 A
				SHEET NO.	DRAWING NUMBER REV.