ITEM NO.	QTY.	DESCRIPTION	MAT'L DWG. NO. OR BNL NO.

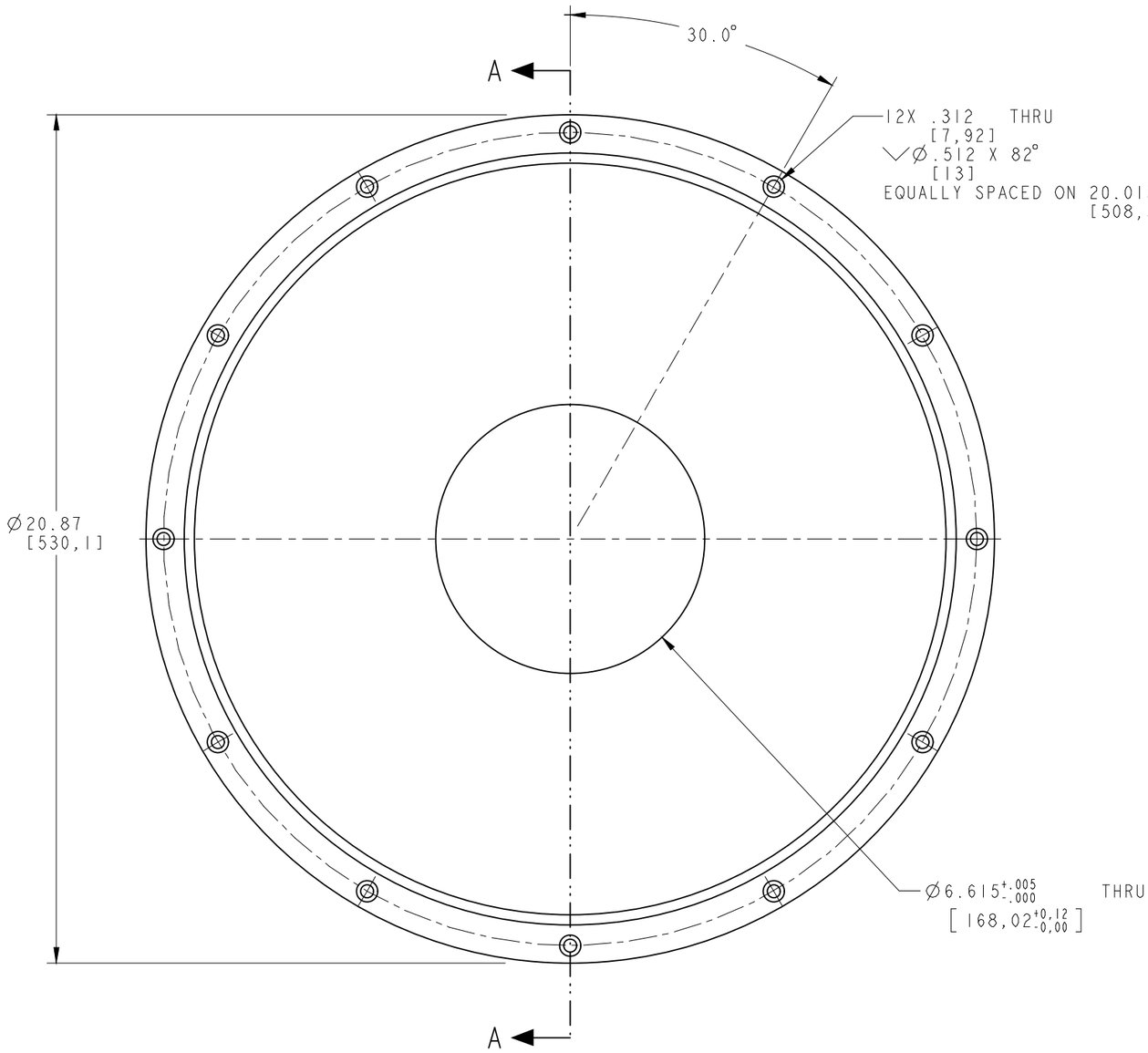

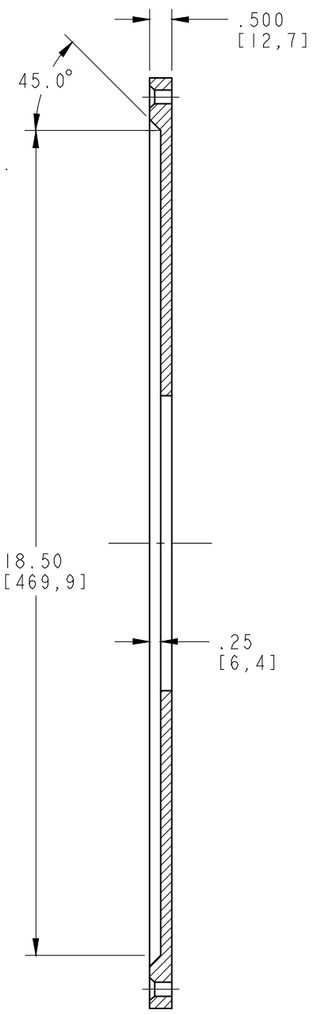

SECTION A-A

949-10-41.04-3

NOTE:
ALL DIMENSIONS ARE IN INCH[MM]

QA: E. GARBER	11/7/00	A-1 ☐ A-2 ☐ A-3 ☐ A-4 ☒ QA CATEGORY		949-10-41.00 USED ON DWG. NO.	1 NO. PER. ASSY
DRWN: R. RUGGIERO	11/7/00	ENGR: E. GARBER	11/7/00	BNL BROOKHAVEN NATIONAL LABORATORY UPTON, N.Y. 11973	
CHK: K. LI	11/9/00	SUPV: J. FRANK	11/9/00		
APPVD	DATE	APPVD	DATE		

UNLESS OTHERWISE SPECIFIED
DIMENSIONS AND TOLERANCES ARE IN INCHES

Decimals .X	±.030	Fractions 0-20	±1/64
Decimals .XX	±.015	Fractions > 20	±1/32
Decimals .XXX	±.005	Break Edges Min	.005
Angular	±0.5°	Break Edges Max	.015
Finish		Weight (lbs)	

TITLE
E-949 DETECTOR
DOWNSTREAM PHOTON VETO COLLAR
COVER

MAT'L: ALUMINUM 6061-T6 SCALE: .50

SHEET of	DRAWING NUMBER	REV.
SHEET NO.	949-10-41.04-3	A

REV	DESCRIPTION	BY	DATE	CKR	APP