REV.	ZONE	DESCRIPTION	BY	DATE	CHK	APP

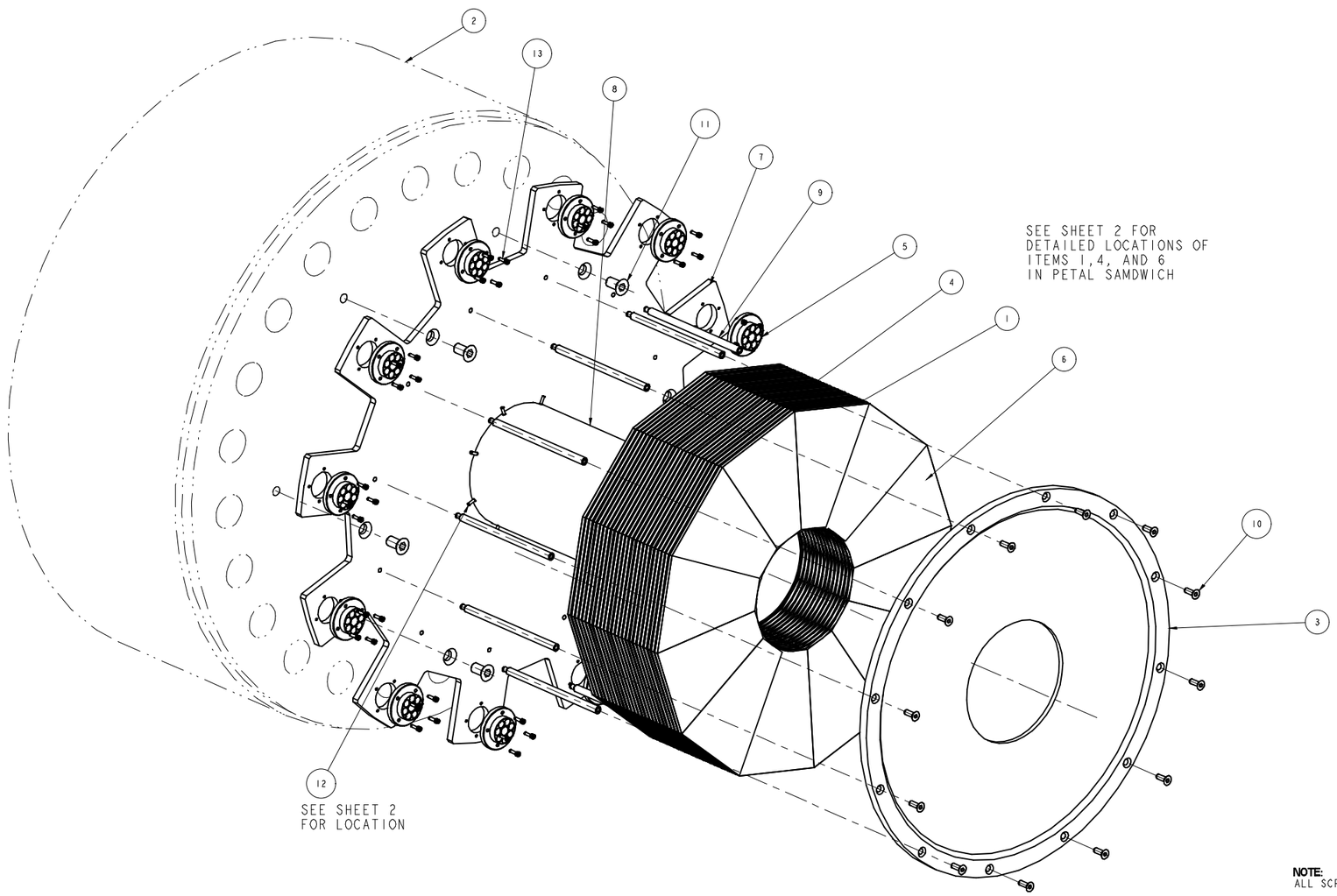

SEE SHEET 2 FOR DETAILED LOCATIONS OF ITEMS 1,4, AND 6 IN PETAL SAMDWICH

NOTE:
ALL SCREWS ARE AMERICAN STANDARD

DET	QTY	DESCRIPTION	TYPE	MATR'L., DWG. NO. OR BNL NO.
13	48	SHCS-6-32_UNC-2A_X_500_LG	PART	
12	8	FHCS-6-32_UNC-2A_X_500_LG	PART	
11	6	FHCS-500-13_UNC-2A_X_1_LG	PART	
10	12	FHCS-250-20_UNC-2A_X_750_LG	PART	
9	12	E949-STANDOFF	PART	949-10-41.03
8	1	E949-SST-TUBE	PART	949-10-41.06
7	1	E949-SST-BASE-PLATE	PART	949-10-41.01
6	300	E949-SCINTILLATOR-SLICE	PART	949-10-41.08
5	12	E949-NORYL-FIBER-HOLDER	PART	949-10-41.02
4	24	E949-LEAD-RING	PART	949-10-41.07
3	1	E949-COVER	PART	949-10-41.04
2	1	E787-IRON	PART	787-02-05.45
1	50	E-949-MYLAR-RING	PART	949-10-41.05

QTY PER ASSEMBLY

QA:	E. GARBER	11/9/00
DRWN:	R. RUGGIERO	11/8/00
CHK:	K. LI	11/8/00
APPVD		DATE

A-1 ☐ A-2 ☐ A-3 ☐ A-4 ☒
QA CATEGORY

ENGR:	E. GARBER	11/9/00
SUPVR:	J. FRANK	11/9/00
APPVD		DATE

USED ON DWG. NO.

UNLESS OTHERWISE SPECIFIED:
DIMENSIONS AND TOLERANCES ARE MM [IN]
INTERPRET AS ASME Y14.5M-1994

Decimals X. [X.X]	±.76 [.030]	Fractions 0-20	±1 [1/32]
Decimals X.X [X.XX]	±.38 [.015]	Fractions > 20	±3 [1/8]
Decimals X.XX [X.XXX]	±.13 [.005]	Break Edges Min.	0.13 [.005]
Angular	±0.5°	Break Edges Max.	0.38 [.015]
Finish ✓	3.2 [125]	Weight (kg) [lbs]	

BROOKHAVEN NATIONAL LABORATORY
UPTON, N.Y. 11973

E949 DETECTOR
PHOTON VETO COLLAR - DOWNSTREAM
ASSEMBLY

SHEET	1/2	ASSEM	Scale: .500
SIZE E	DRAWING NUMBER 949-10-41.00 -5		REV. A

SCALE .500

Notes: Unless otherwise specified:

#Pro/E

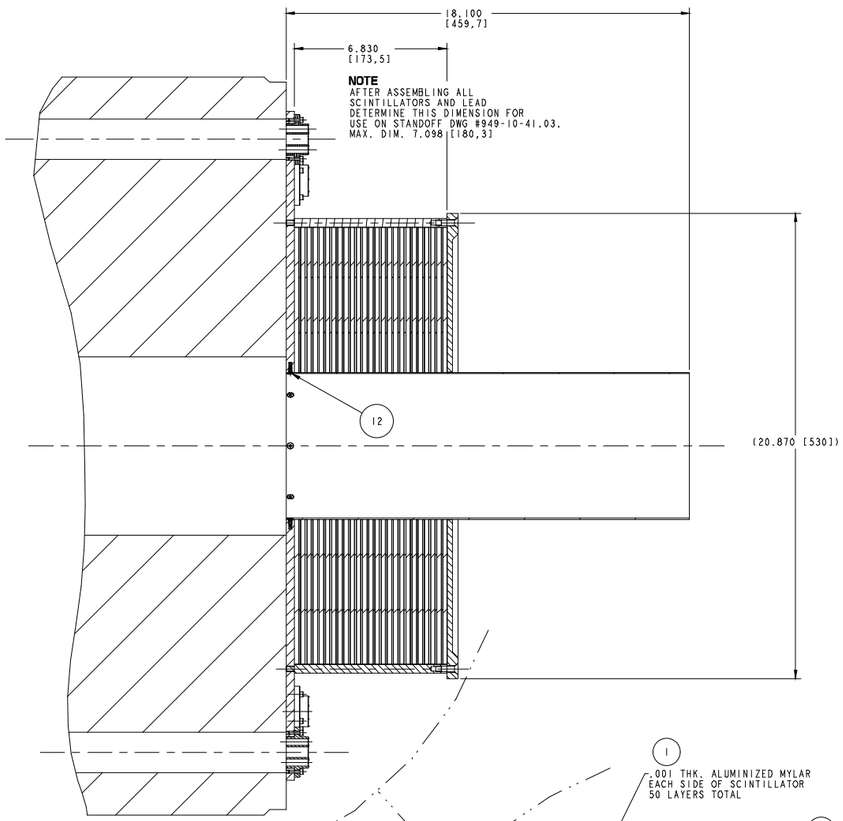

SECTION A-A

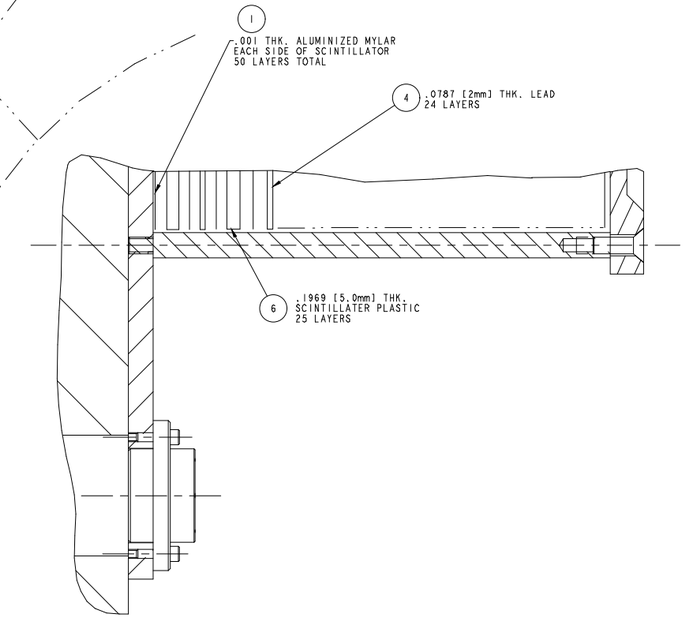

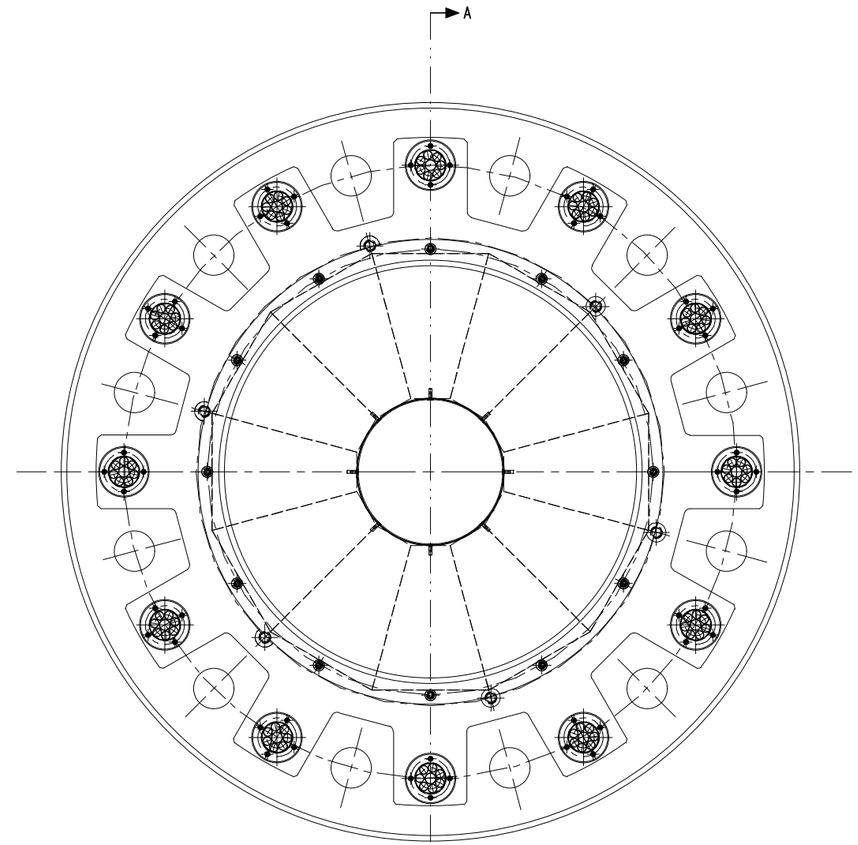

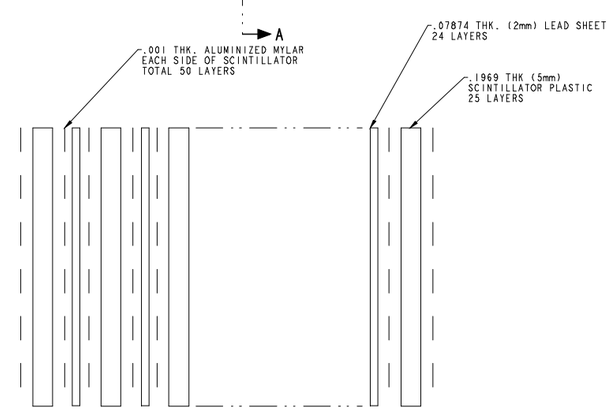

PETAL SANDWICH

SHEETS 2/2		Scale: .500
SIZE E	DRAWING NUMBER 949-10-41.00	REV. A

*Pro/E