DEPARTMENT OF PHYSICS
KYOTO UNIVERSITY.

31-Aug-2

UPdate on driver, boxes, monitoring, ...

T. Nomura

1. Driver

(1 final version @ BNL
1 old version

12 + α.

minicard (card itself)	...	ok
parts	--	ok
mount	--	not yet
1 - mother board (handmade)	--	not yet.
2 - power supply	--	ok 2 pss.

2. Boxes

.. ~ mid of November

3. monitoring

4. trigger

→ not yet.

Boxes

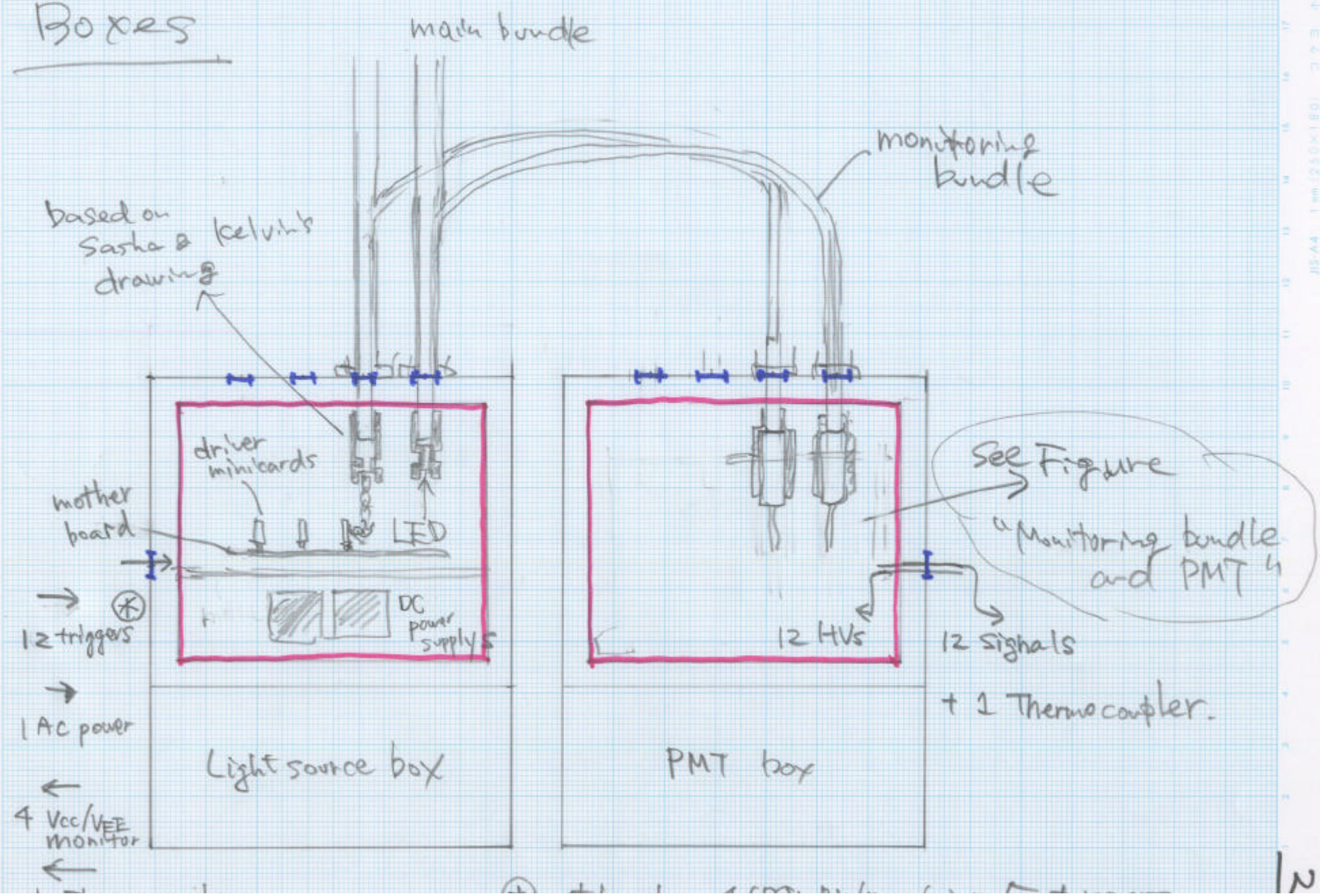
main bundle
monitoring bundle
based on Sasha & Kelvin's drawing
driver minicards
mother board
LED
DC power supplys
12 triggers
1 AC power
4 Vcc/VEE monitor
Light source box
12 HVs
12 signals
+ 1 Thermocoupler.
PMT box
See Figure "Monitoring bundle and PMT"

Monitoring bundle and PMT

All dimensions are in mm unit.

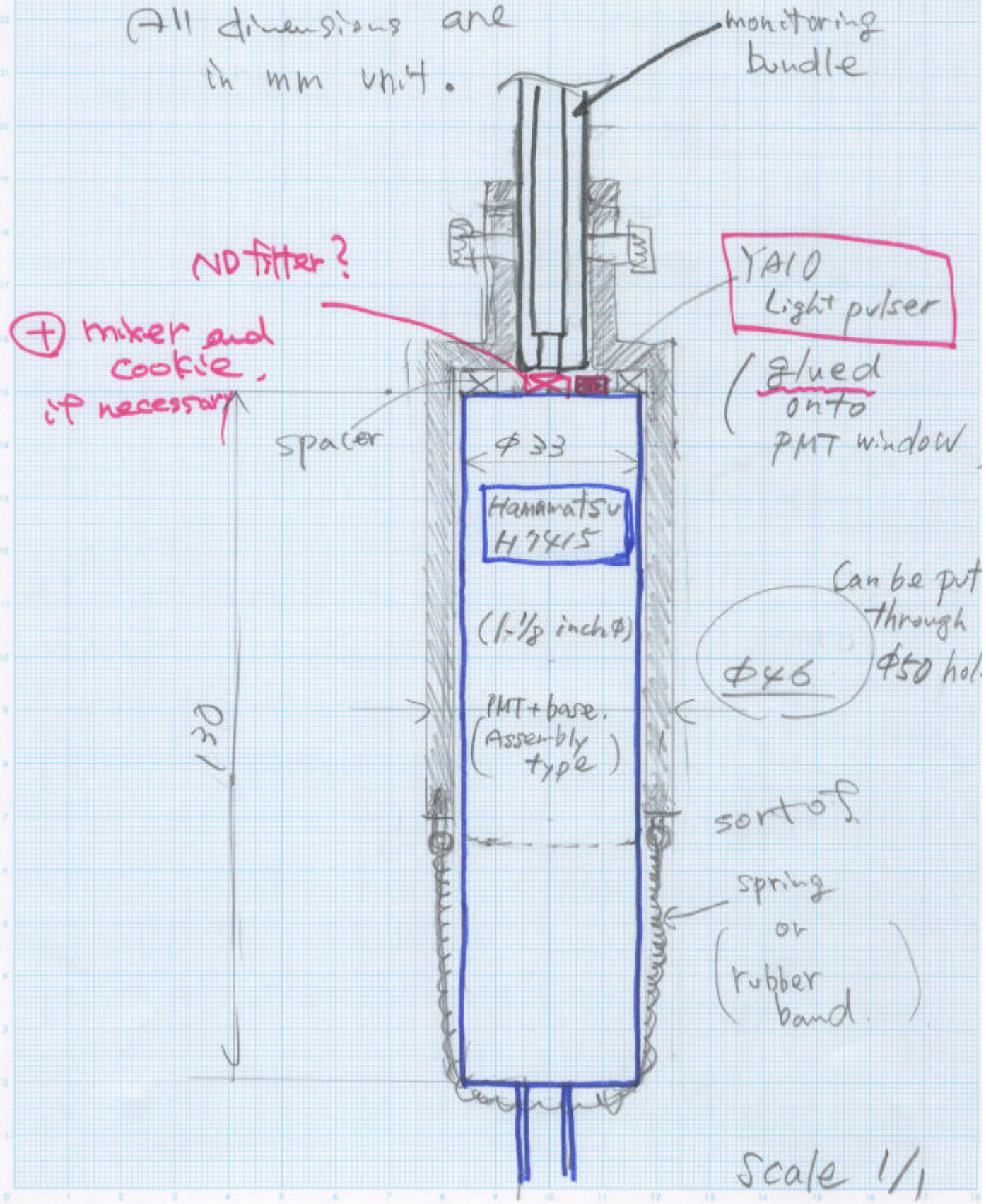

Box(es)

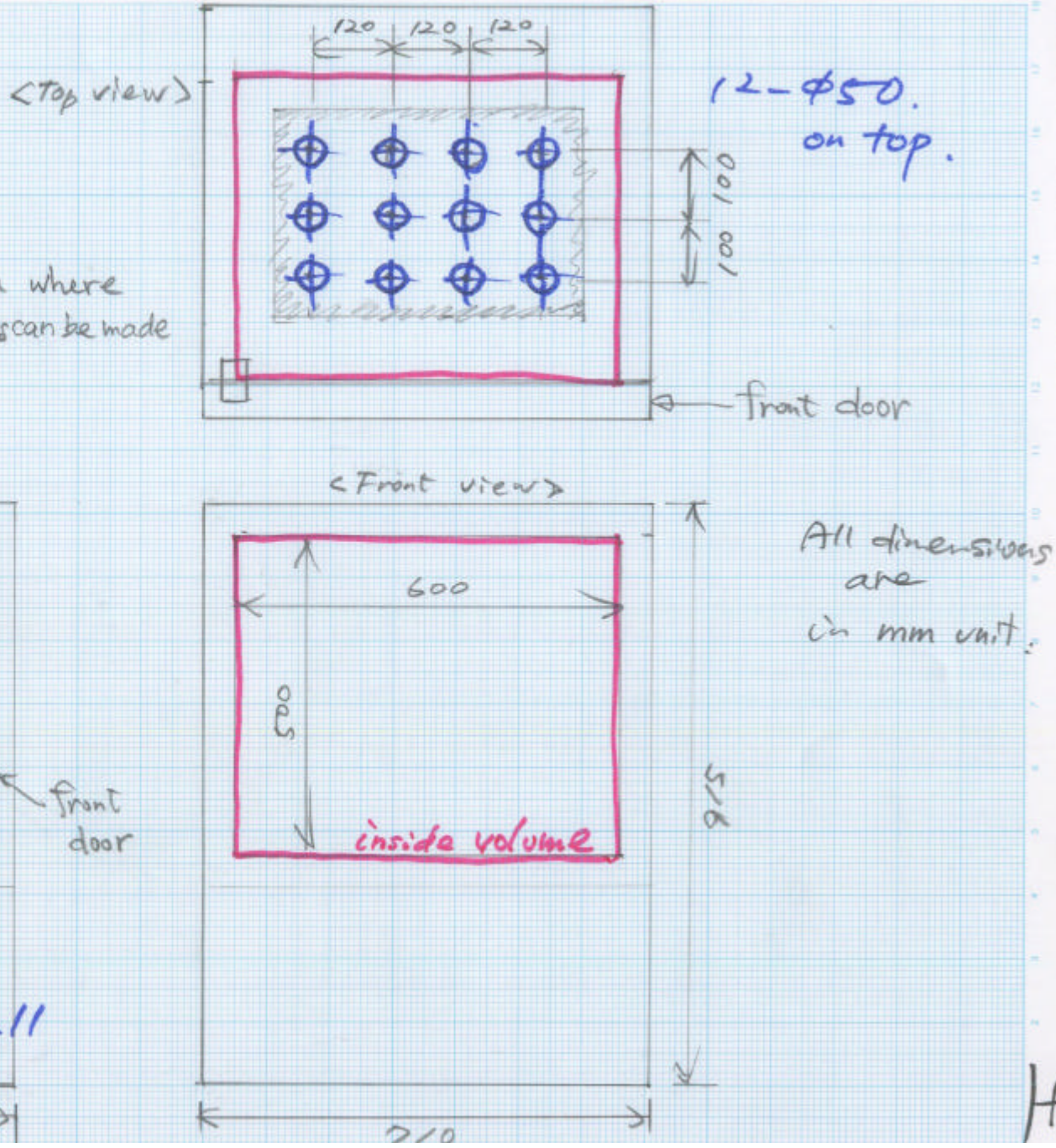
<Top view>
120
120
120
100
100
12-φ50.
on top.
Area where holes can be made
front door
<Side view>
477
front door
2-φ50
in side wall
<Front view>
600
500
inside volume
919
All dimensions are in mm unit.

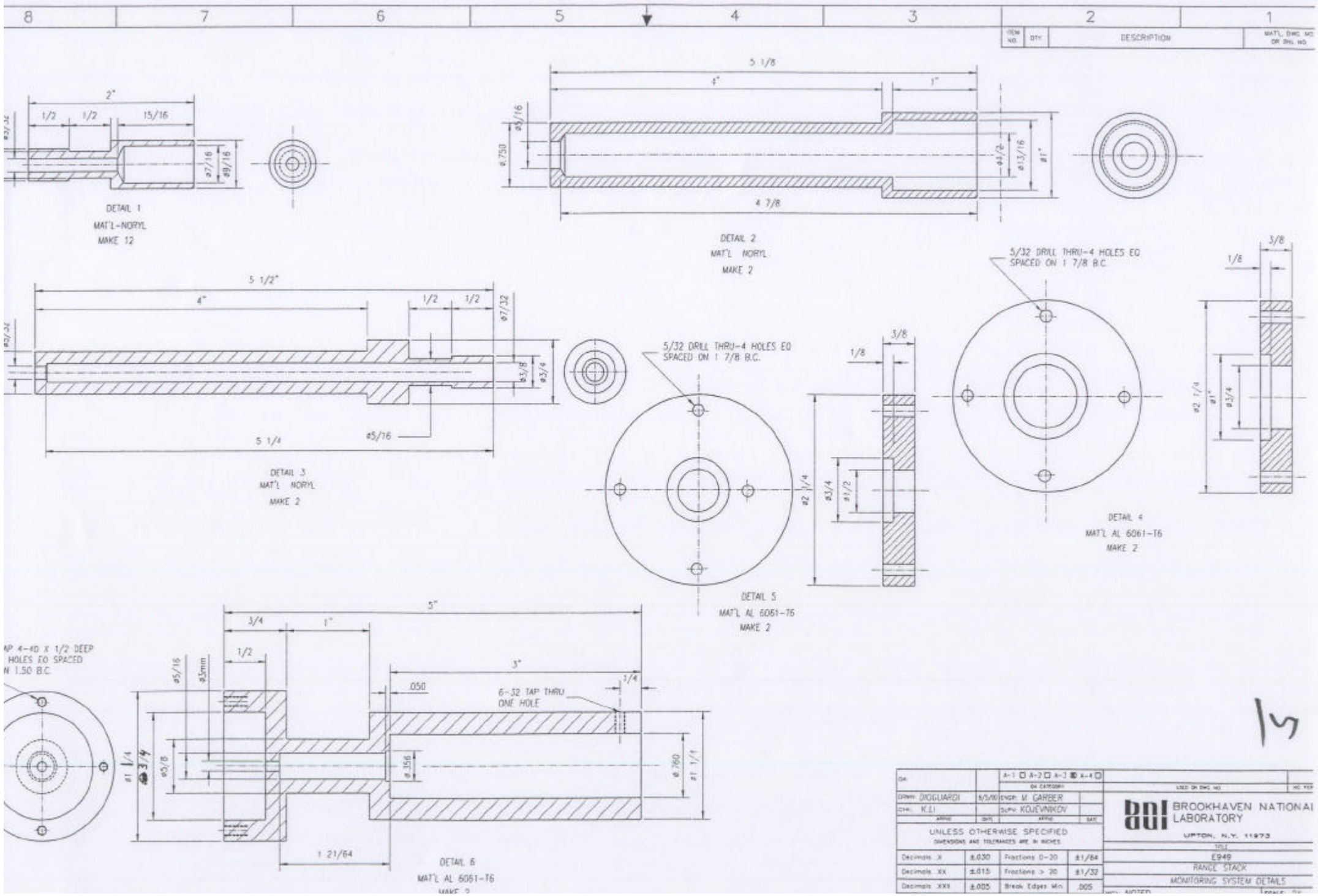

8
7
6
5
4
3
2
1
ITEM NO.
QTY.
DESCRIPTION
MAT'L, DWG. NO. OR DWG. NO.
DETAIL 1
MAT'L-NORYL
MAKE 12
DETAIL 2
MAT'L NORYL
MAKE 2
DETAIL 3
MAT'L NORYL
MAKE 2
5/32 DRILL THRU-4 HOLES EQ SPACED ON 1 7/8 B.C.
DETAIL 4
MAT'L AL 6061-T6
MAKE 2
DETAIL 5
MAT'L AL 6061-T6
MAKE 2
6-32 TAP THRU ONE HOLE
DETAIL 6
MAT'L AL 6061-T6
MAKE 2
DRWN: DIOGUARDI
CHK: K.LI
ENGR: M. GARBER
SUPV: KOJEVNIKOV
UNLESS OTHERWISE SPECIFIED
DIMENSIONS AND TOLERANCES ARE IN INCHES
Decimals .X ±.030
Decimals .XX ±.015
Decimals .XXX ±.005
Fractions 0-20 ±1/64
Fractions > 20 ±1/32
Break Edges Min. .005
BROOKHAVEN NATIONAL LABORATORY
UPTON, N.Y. 11973
E949
RANGE STACK
MONITORING SYSTEM DETAILS

monitoring using EA10.

from Sugimoto

☆ Number of photoelectrons.

PMT window	Optical grease	Npe.	
Quartz (R2256)	w/o	720	~50Hz
"	with	1620	~50Hz
	→ optical contact is quite importa		
glass (R329)	with	1780	~50Hz

→ no need to use UV glass.

gate width

100ns	200ns	
1620	1800	(+11%)

→ operate with 200ns width ?
for monitor PMTs.

LED ~1000 p.e. → Pulse height 500mV

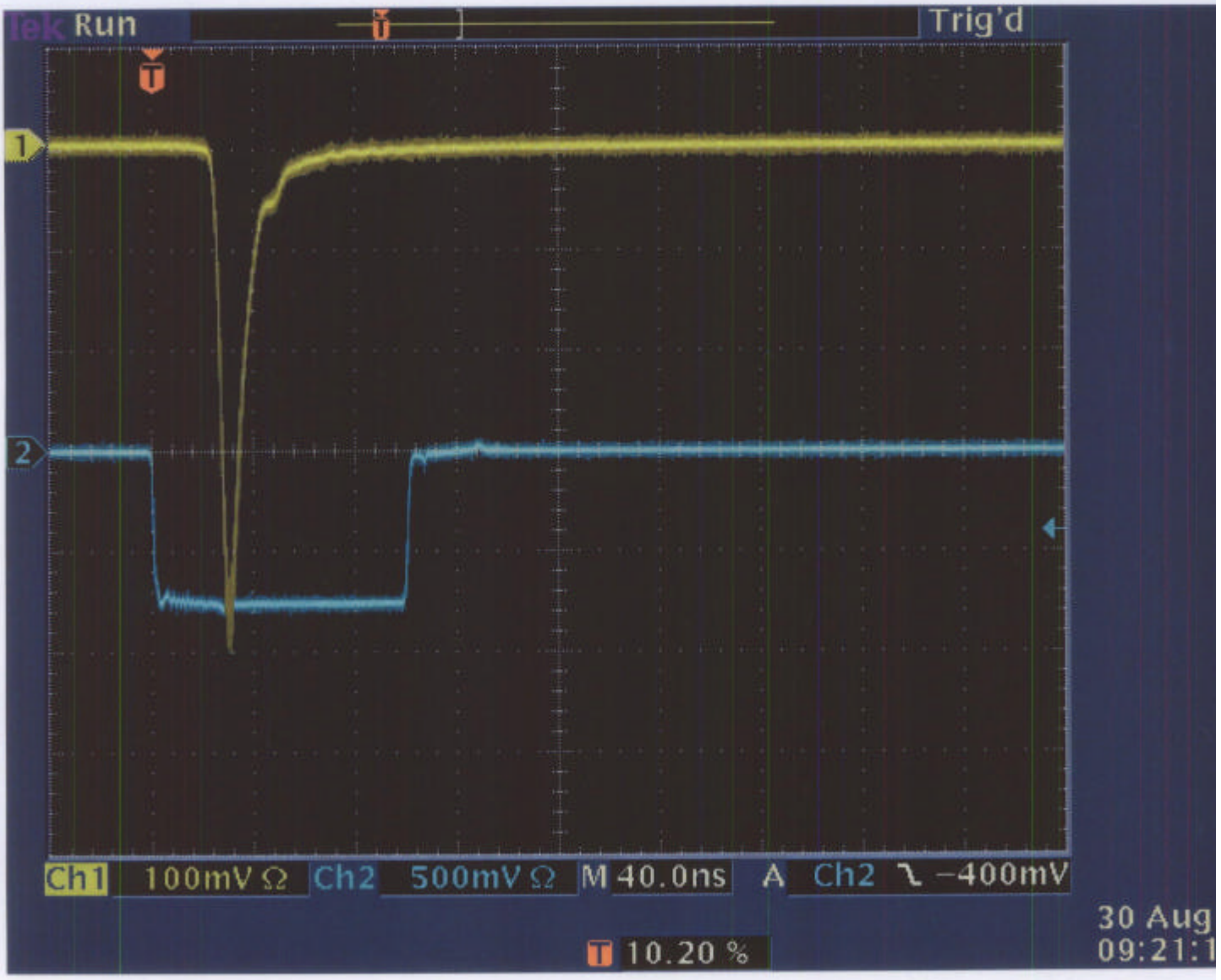

yellow (upper) -- signal
blue (lower) -- ADC gate.

110mV for 1000 p.e.
factor 5 lower than

YAlO ~ 1600 p.e.

→ pulse height 180m

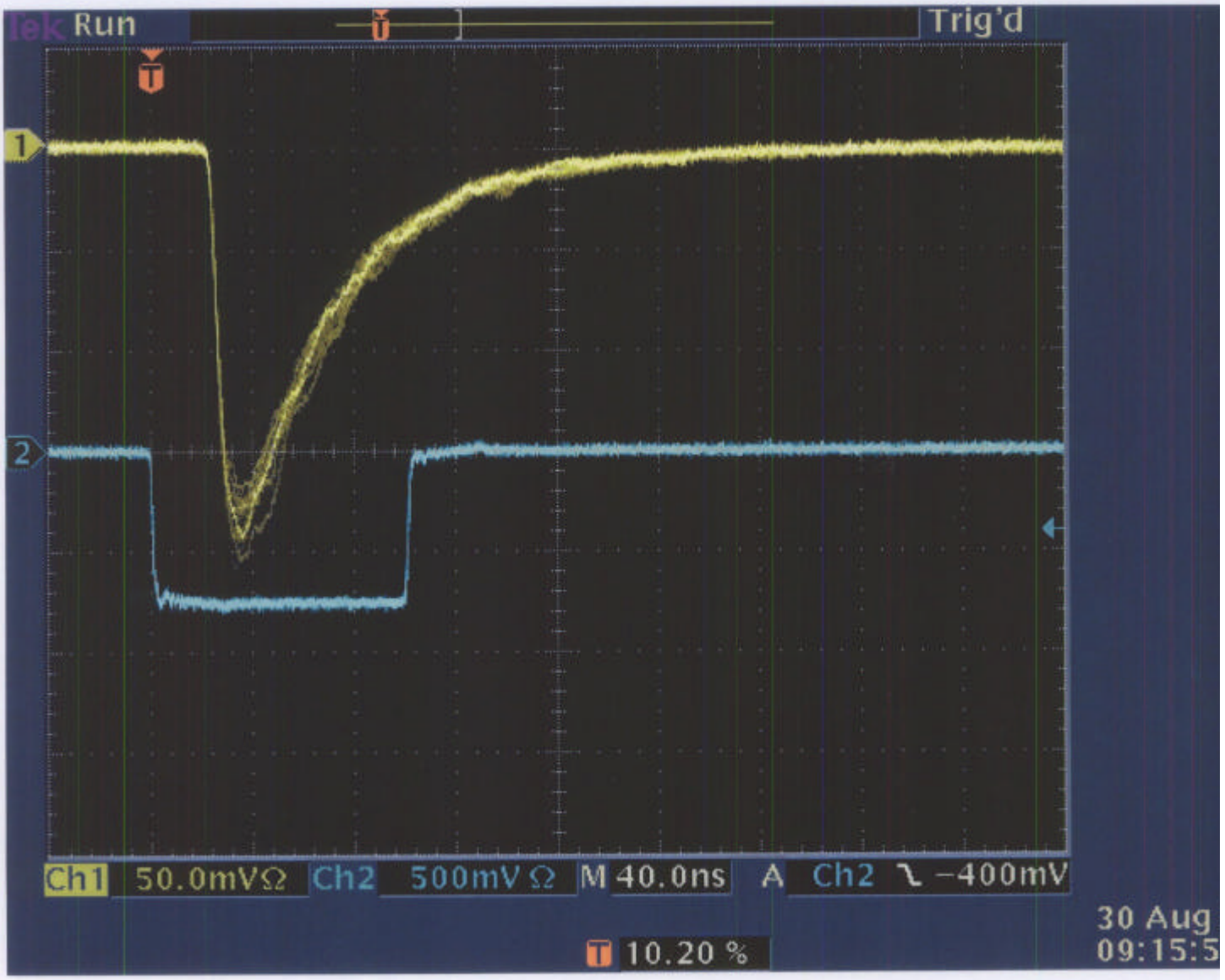

Yellow (upper) -- signal

blue (lower) -- APC gate.