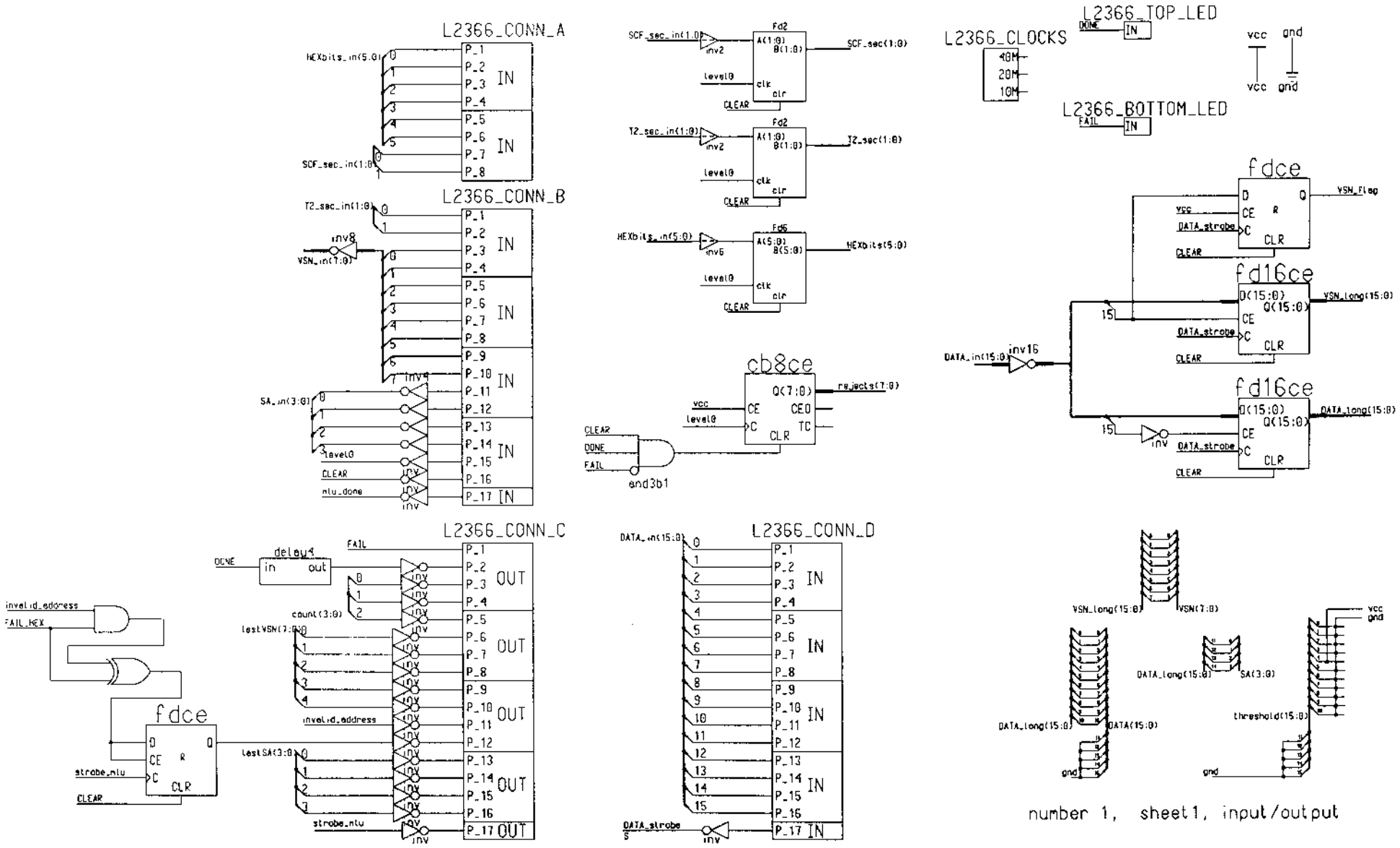

number 1, sheet 1, input/output

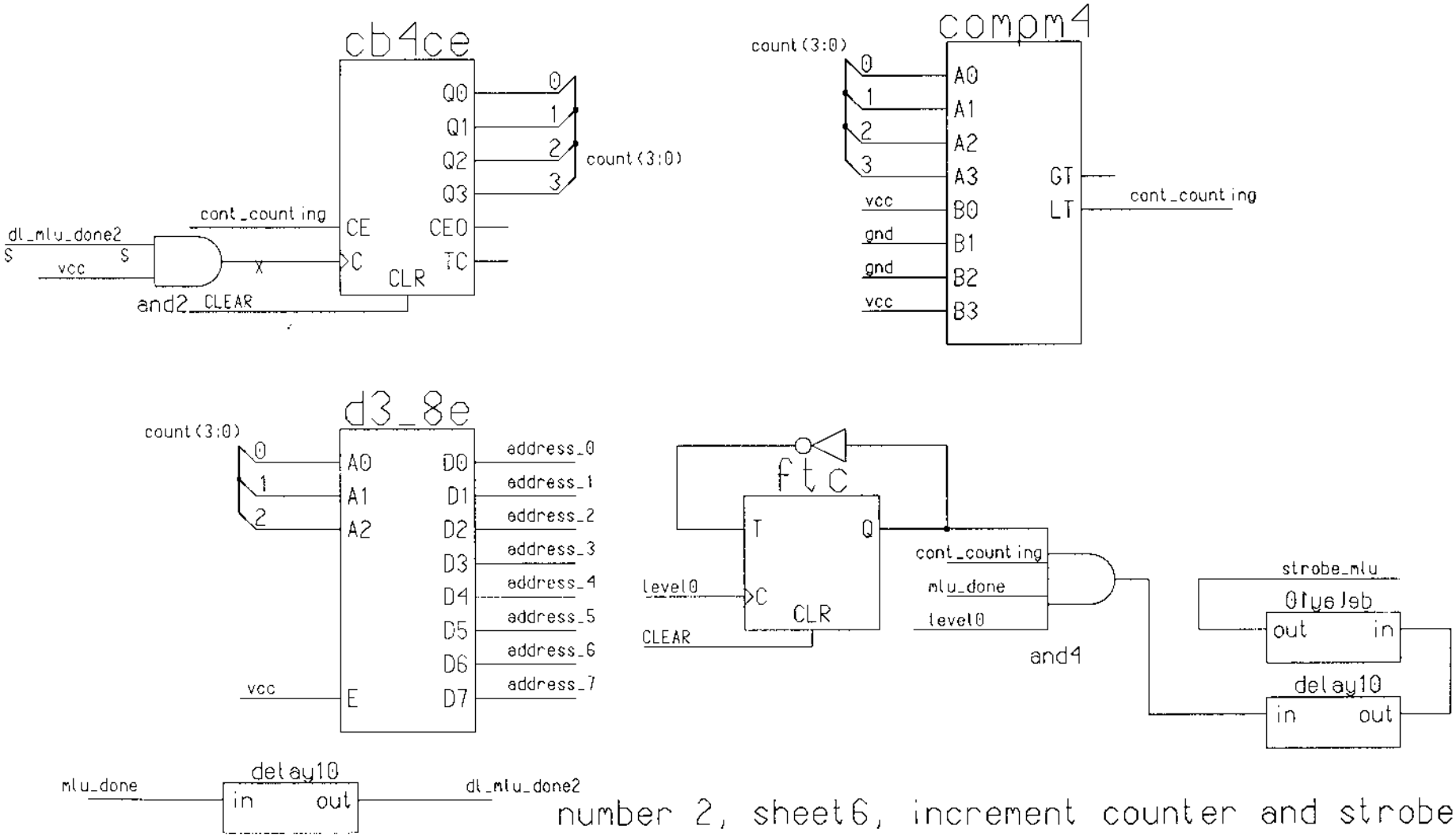

number 2, sheet6, increment counter and strobe mlu

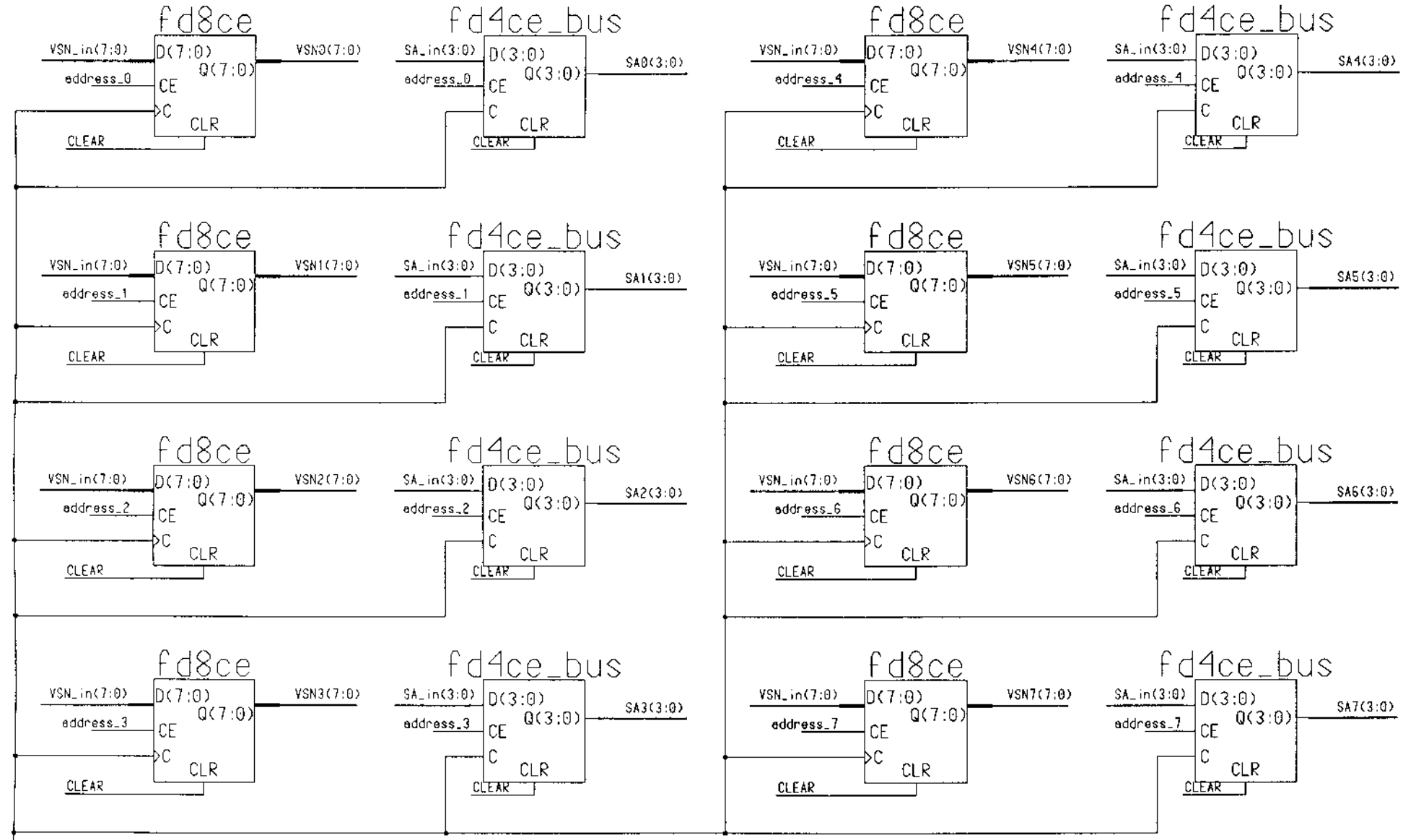

number 3, sheet2, put the MLU output in the appropriate latch

number 4, sheet 3, make the comparisons: VSN, SA, and ADC above threshold

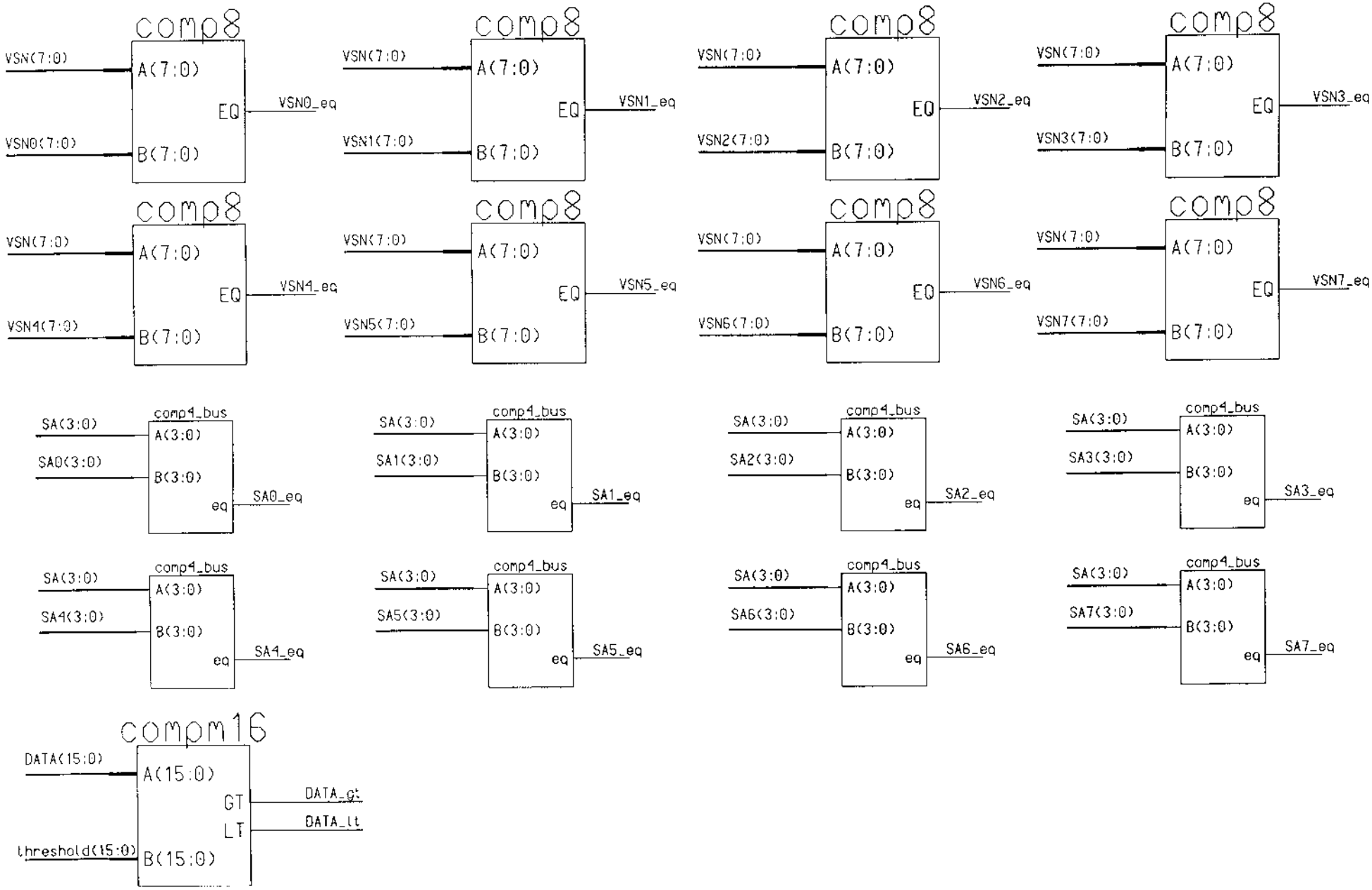

number 5, sheet5, find the largest VSN to check

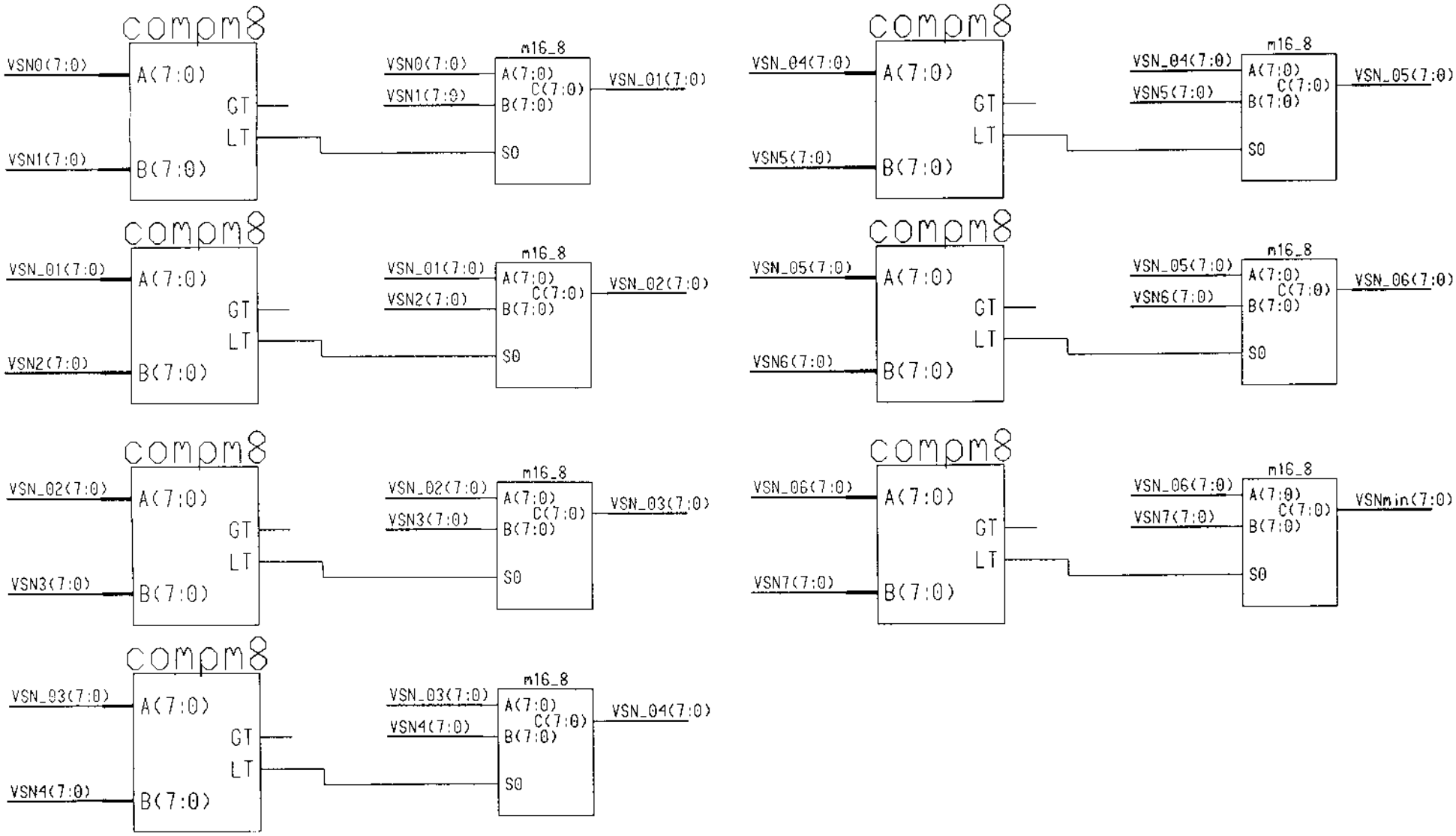

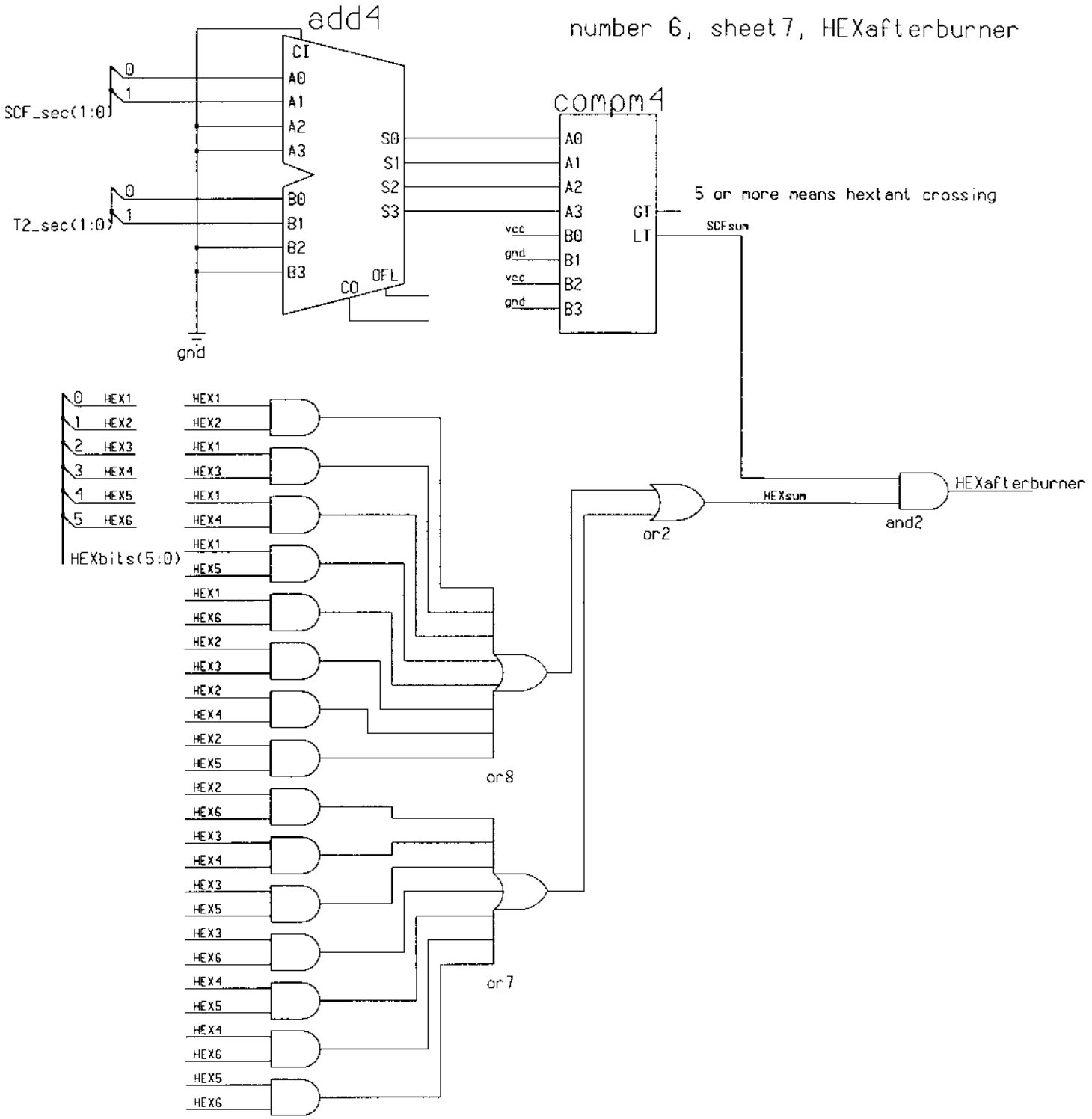
number 6, sheet 7, HEXafterburner
add4
CI
A0
A1
A2
A3
B0
B1
B2
B3
S0
S1
S2
S3
CO
OFL
SCF_sec(1:0)
T2_sec(1:0)
gnd
comp4
A0
A1
A2
A3
B0
B1
B2
B3
GT
LT
vcc
gnd
5 or more means hextant crossing
SCFsum
HEXsum
HEXafterburner
or2
and2
or8
or7
HEXbits(5:0)
HEX1
HEX2
HEX3
HEX4
HEX5
HEX6
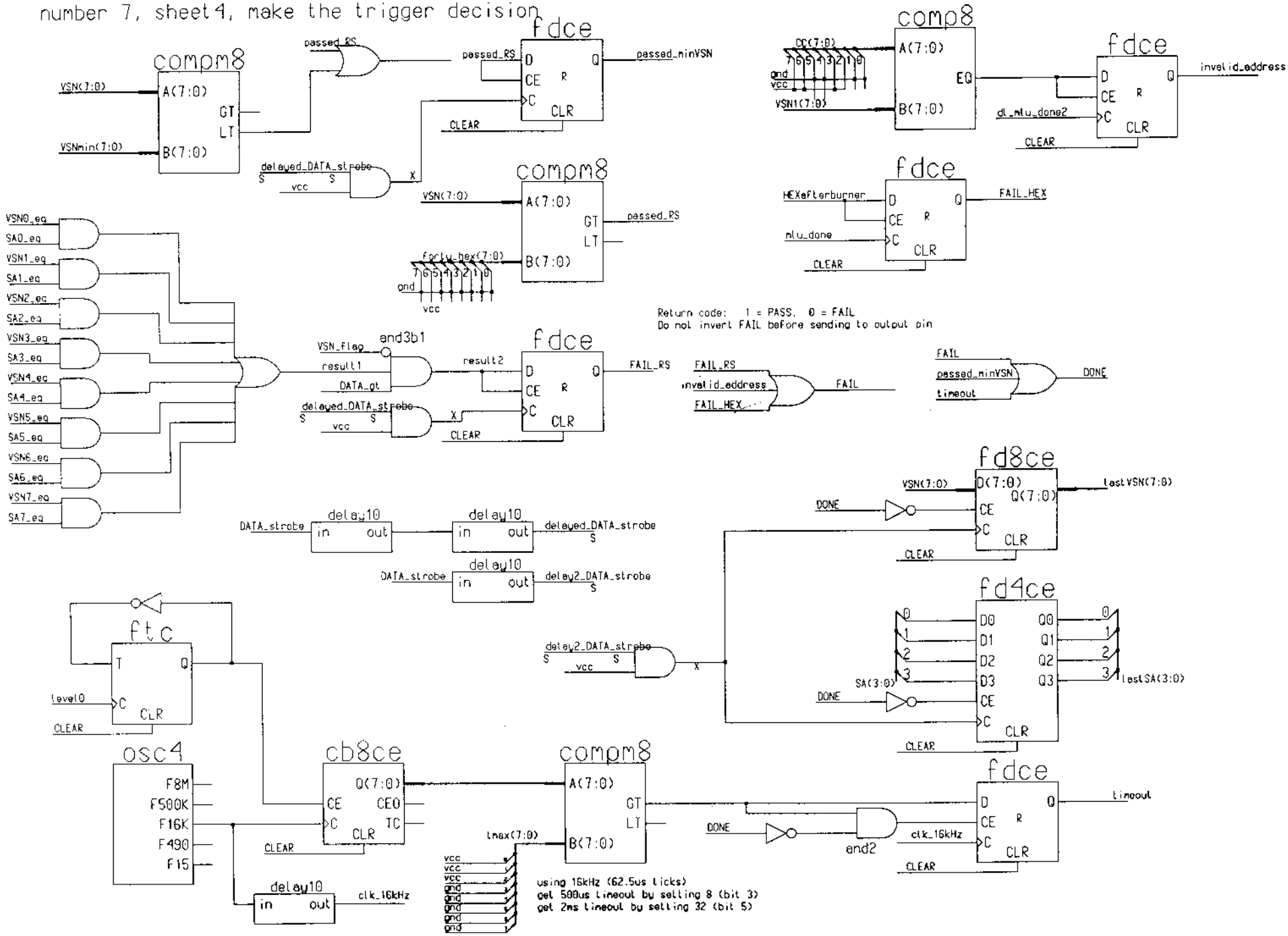
number 7, sheet 4, make the trigger decision