REVISION RECORD			
LTR	ECO NO:	APPROVED:	DATE:

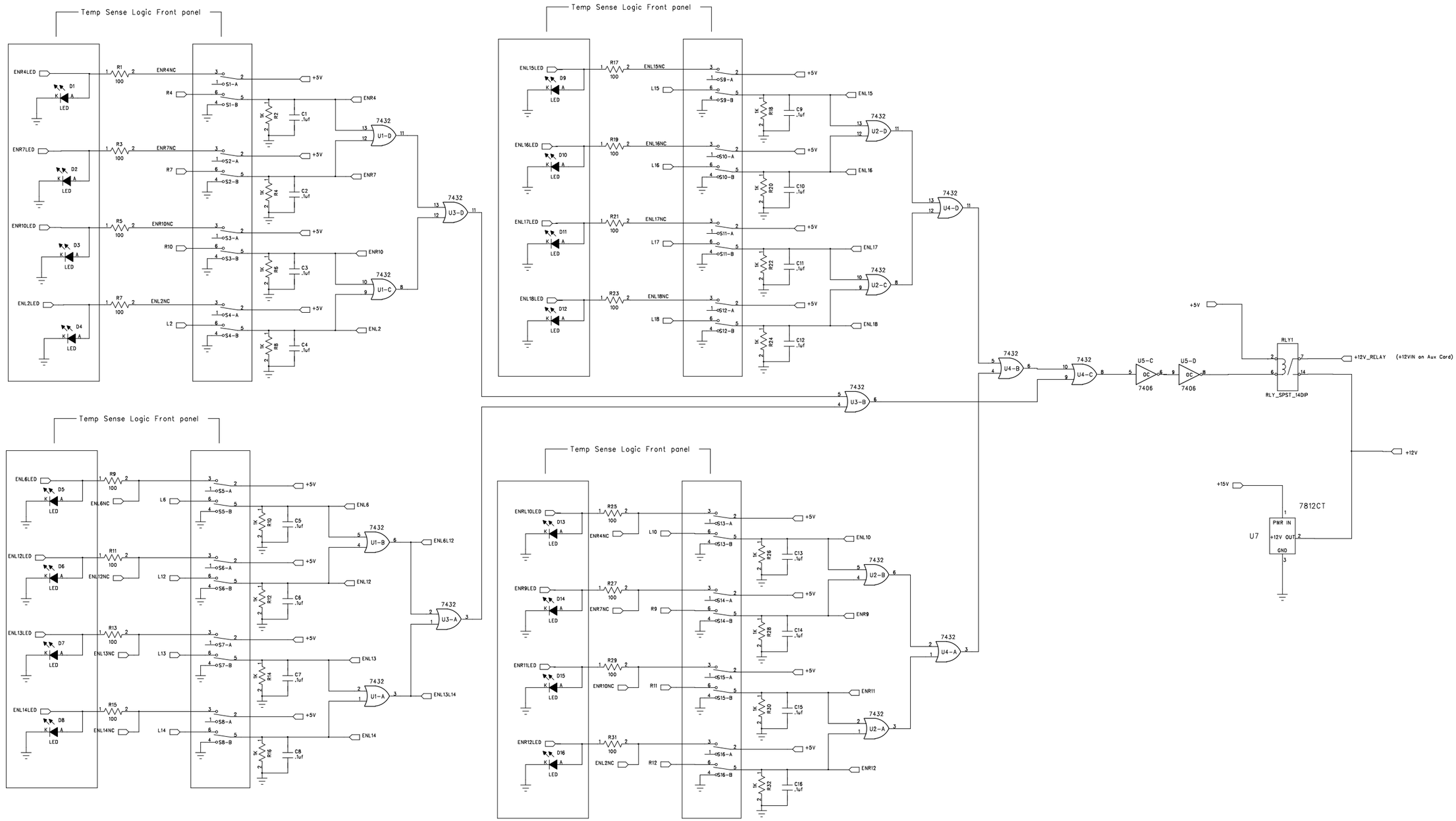

COMPANY:	Brookhaven National Laboratory E787 / 949		
TITLE:	Temperature Sense Enable/Disable -MAIN		
DRAWN: H.S. Diaz	DATED: 11/08/2003		
CHECKED:	DATED:	CODE:	SIZE:
QUALITY CONTROL:	DATED:	DRAWING NO: TempSense-EnDis-Rev_B.sch	REV:
RELEASED:	DATED:	SCALE:	SHEET: 1 OF 2

REVISION RECORD			
LTR	ECO NO:	APPROVED:	DATE:

AUX Card Logic and Spare Channels

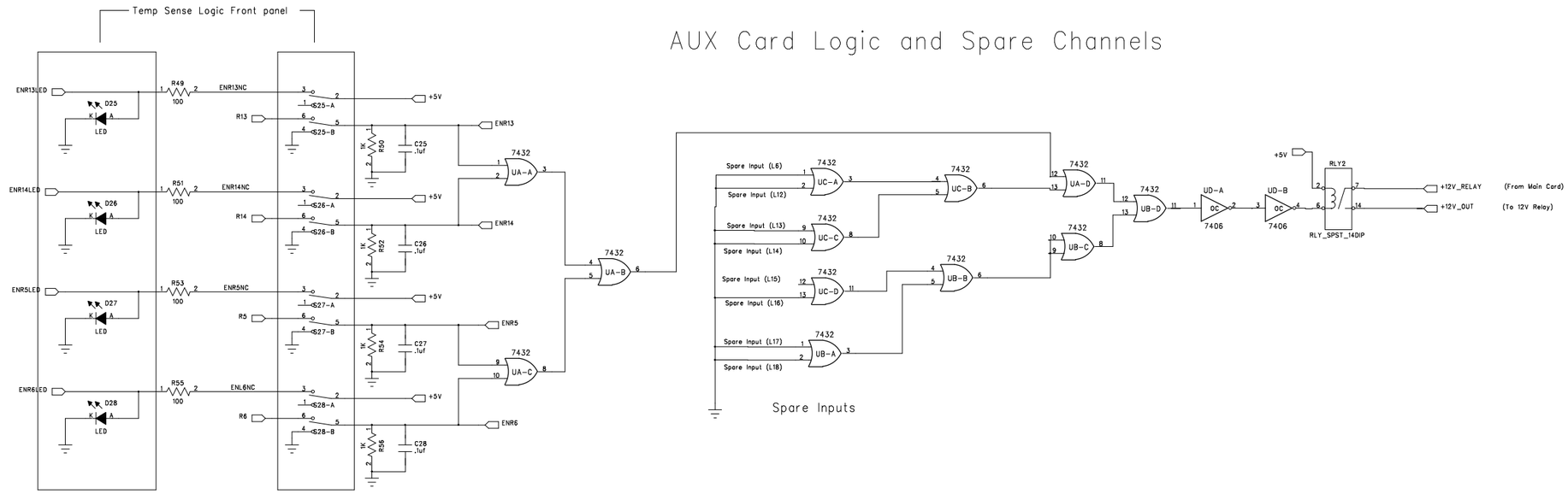

Chassis Mounted Components

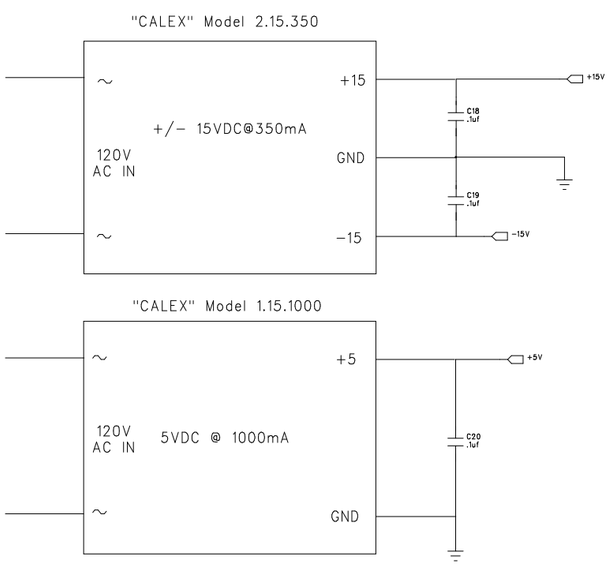

Monolothic Power Supplies

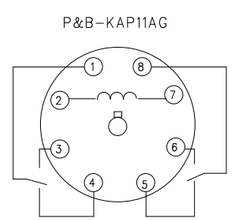

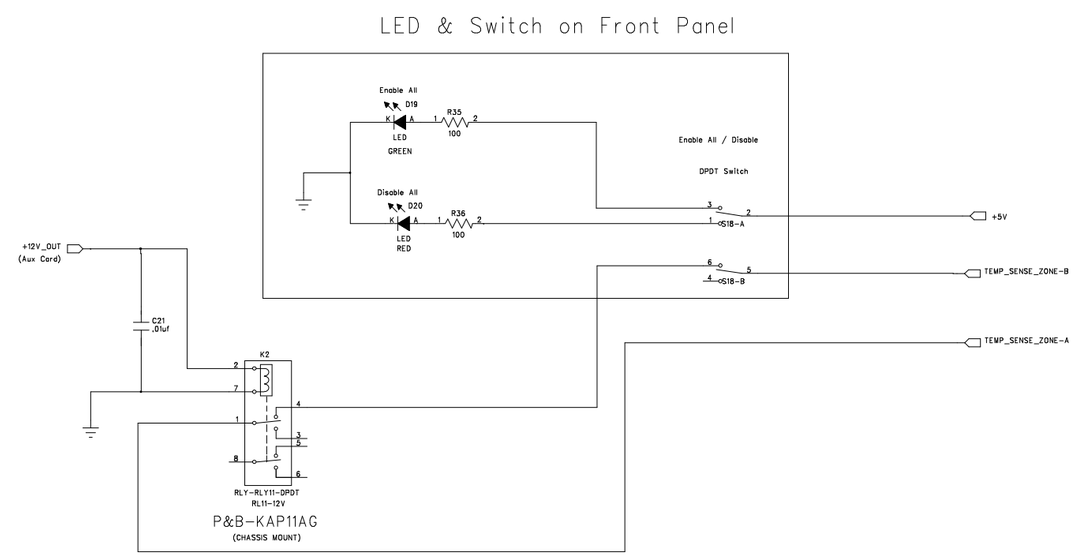

Disable All & Alarm Relay

DRAWN: H.S. Diaz	DATED: 11/07/03	COMPANY: Brookhaven National Laboratory E787 / 949	
CHECKED:	DATED:	TITLE: Temperature Sense Enable/Disable AUX & PWR	
QUALITY CONTROL:	DATED:	CODE: / SIZE: / DRAWING NO: TempSense-EnDis-Rev_B.sch	REV:
RELEASED:	DATED:	SCALE:	SHEET: 2 OF 2