REVISION RECORD			
LTR	ECO NO:	APPROVED	DATE:

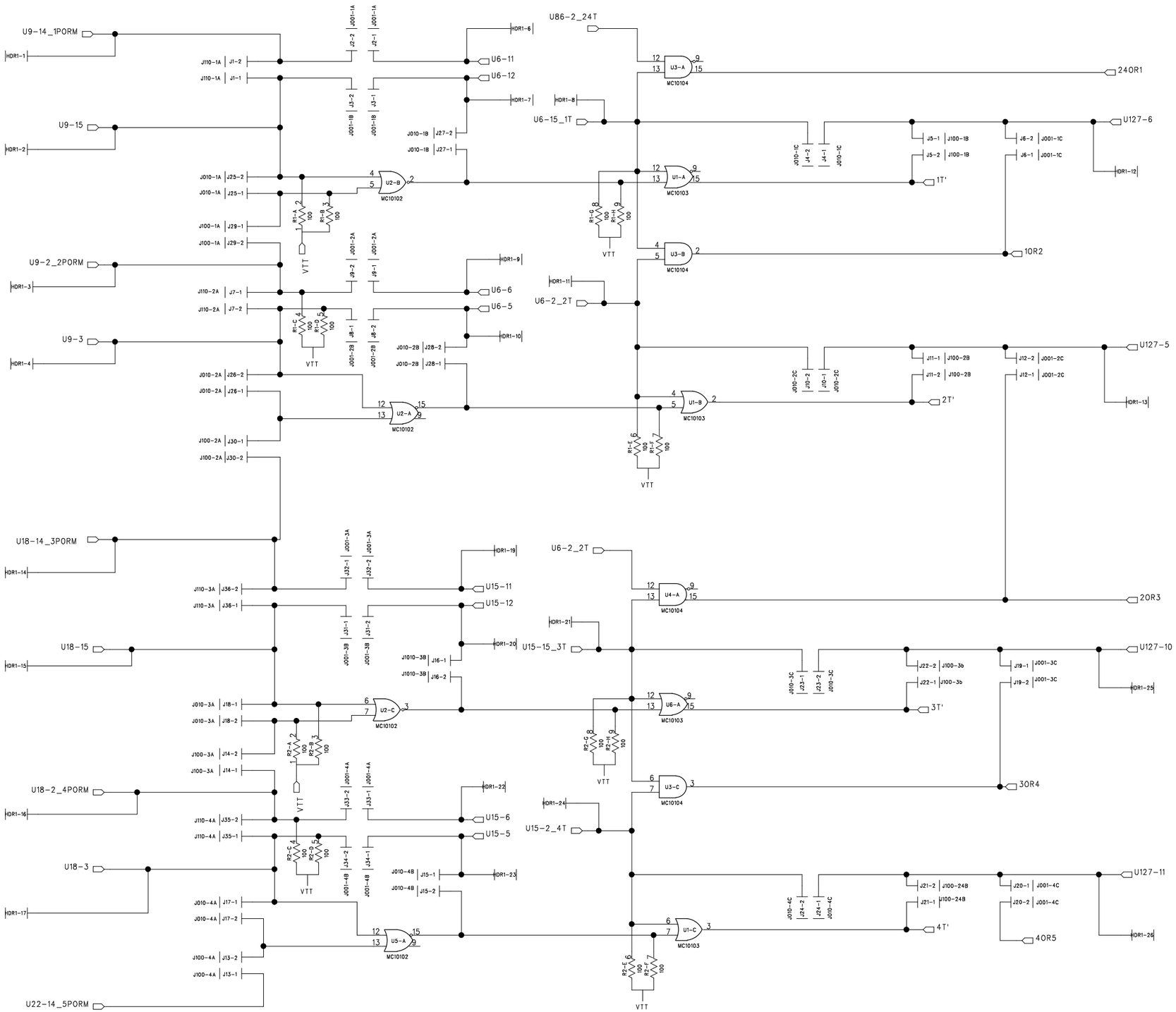

Notes:

Connector Signal and Power Distribution

Pin 1–39 Signals

HD1 – CH 1–6
HD2 – CH 7–12
HD3 – CH 13–18
HD4 – CH 19–24

Pin 40 – 50 Pwr and Gnd

GND = PINS 40–42, 46, 47
–5.2v = PINS 43–45
–2V = PINS 48–50

DRAWN: H.S. Diaz	DATED: 6/12/2002	COMPANY: Brookhaven National Laboratory	
CHECKED:	DATED:	TITLE: MT2A Upgrade/Modification PCB Daughtercard	
QUALITY CONTROL:	DATED:	CODE: / SIZE: / DRAWING NO: MT2A–01 Channel 01 – 04	REV: Rev.0
RELEASED: PRELIMINARY	DATED:	SCALE:	SHEET1 OF 7

REVISION RECORD			
LTR	ECO NO:	APPROVED	DATE:

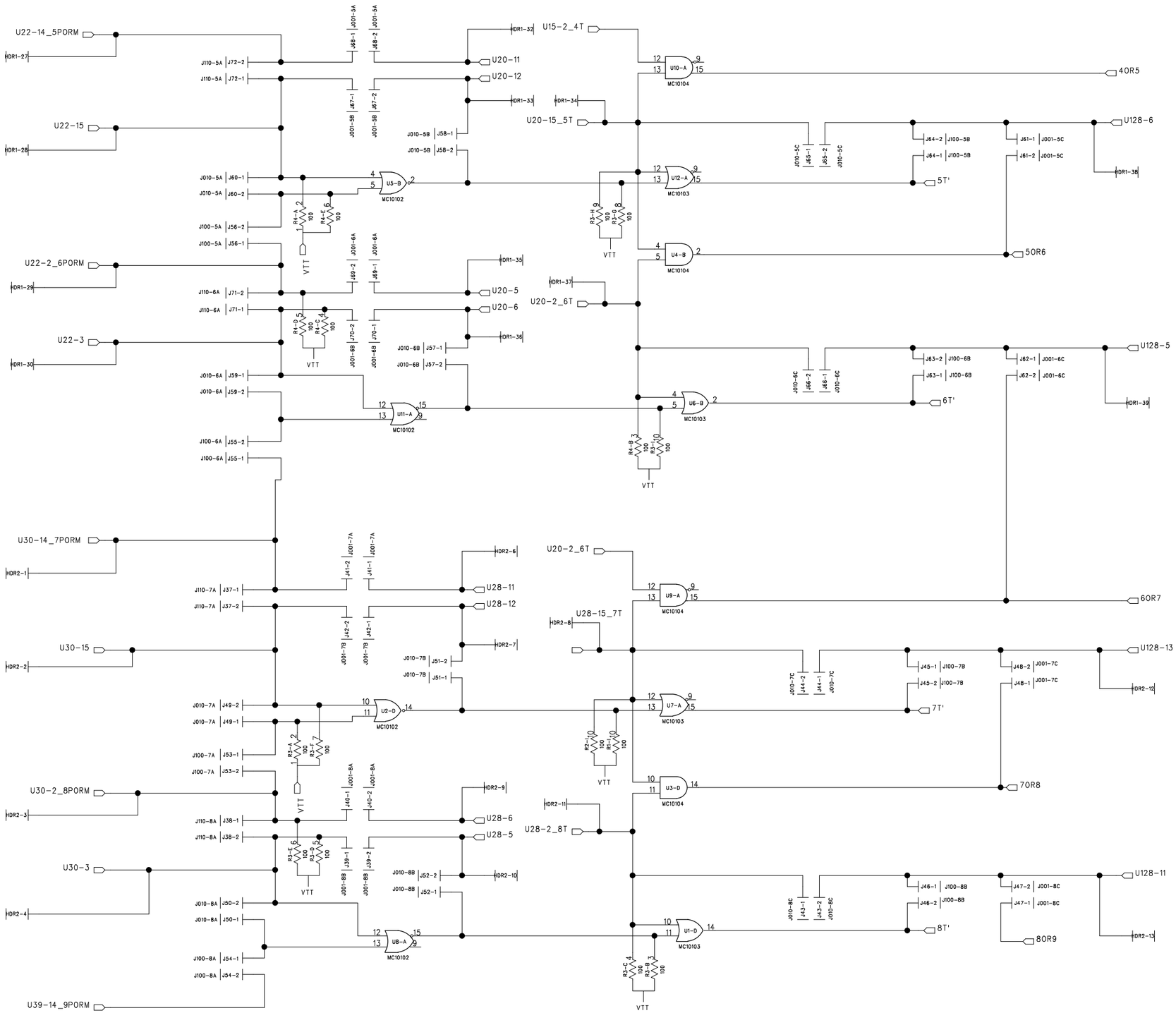

Notes:

Connector Signal and Power Distribution

Pin 1–39 Signals

HD1 – CH 1–6
HD2 – CH 7–12
HD3 – CH 13–18
HD4 – CH 19–24

Pin 40 – 50 Pwr and Gnd

GND = PINS 40–42, 46, 47
–5.2v = PINS 43–45
–2V = PINS 48–50

DRAWN: H.S. Diaz	DATED: 6/14/2002	COMPANY: Brookhaven National Laboratory	
CHECKED:	DATED:	TITLE: MT2A Upgrade/Modification PCB Daughtercard	
QUALITY CONTROL:	DATED:	CODE: / SIZE: / DRAWING NO: MT2A–01 Channel 05 – 08	REV: Rev.0
RELEASED: PRELIMINARY	DATED:	SCALE:	SHEET: 2 OF 7

REVISION RECORD			
LTR	ECO NO:	APPROVED	DATE:

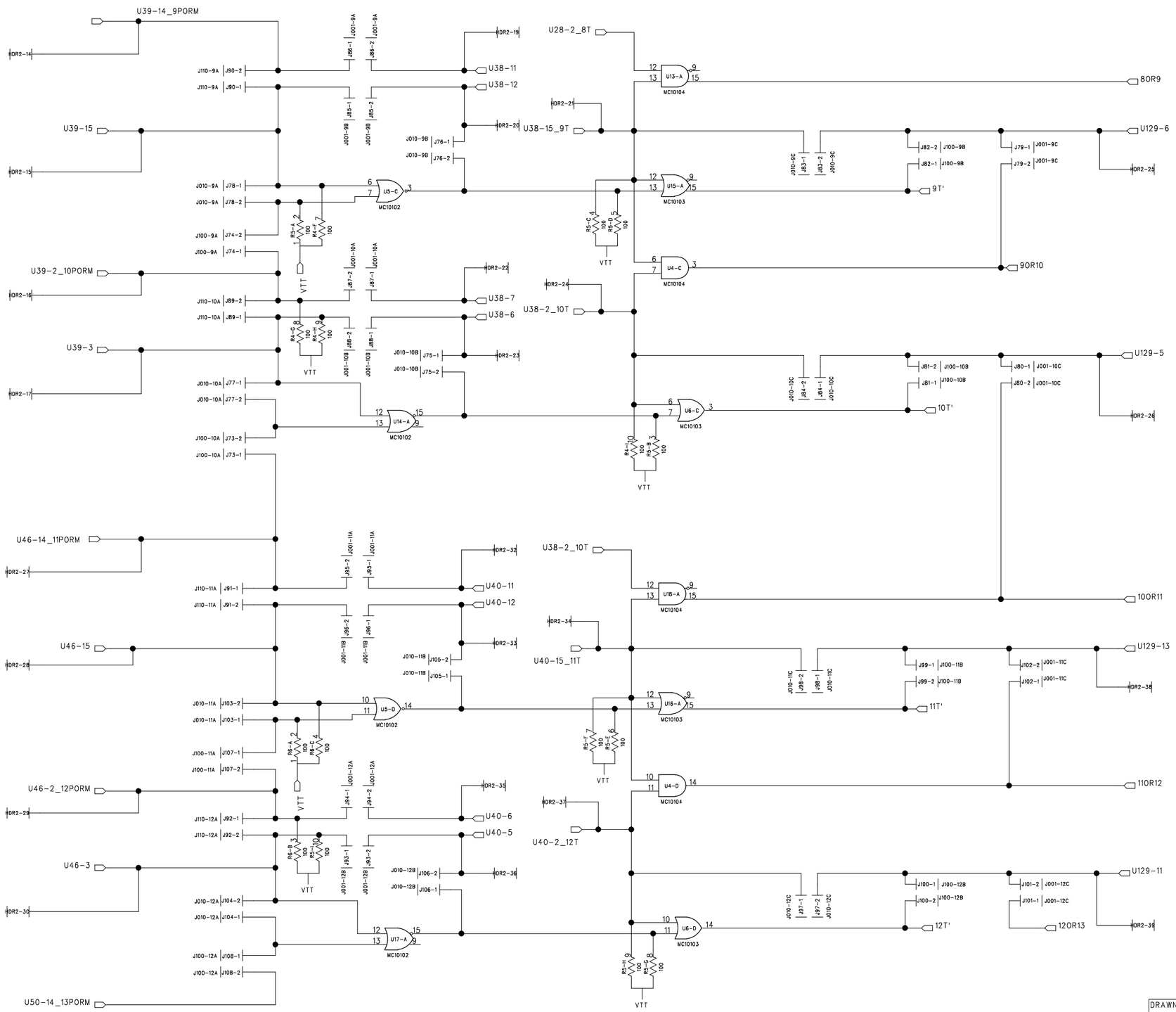

Notes:

Connector Signal and Power Distribution

Pin 1-39 Signals

HD1 - CH 1-6
HD2 - CH 7-12
HD3 - CH 13-18
HD4 - CH 19-24

Pin 40 - 50 Pwr and Gnd

GND = PINS 40-42, 46, 47
-5.2v = PINS 43-45
-2V = PINS 48-50

DRAWN: H.S. Diaz	DATED: 6/12/2002	COMPANY: Brookhaven National Laboratory	
CHECKED:	DATED:	TITLE: MT2A Upgrade/Modification PCB Daughtercard	
QUALITY CONTROL:	DATED:	CODE: / SIZE: / DRAWING NO: MT2A-01 Channel 09- 12	REV: Rev.0
RELEASED: PRELIMINARY	DATED:	SCALE:	SHEET: 3 OF 7

REVISION RECORD			
LTR	ECO NO:	APPROVED	DATE:

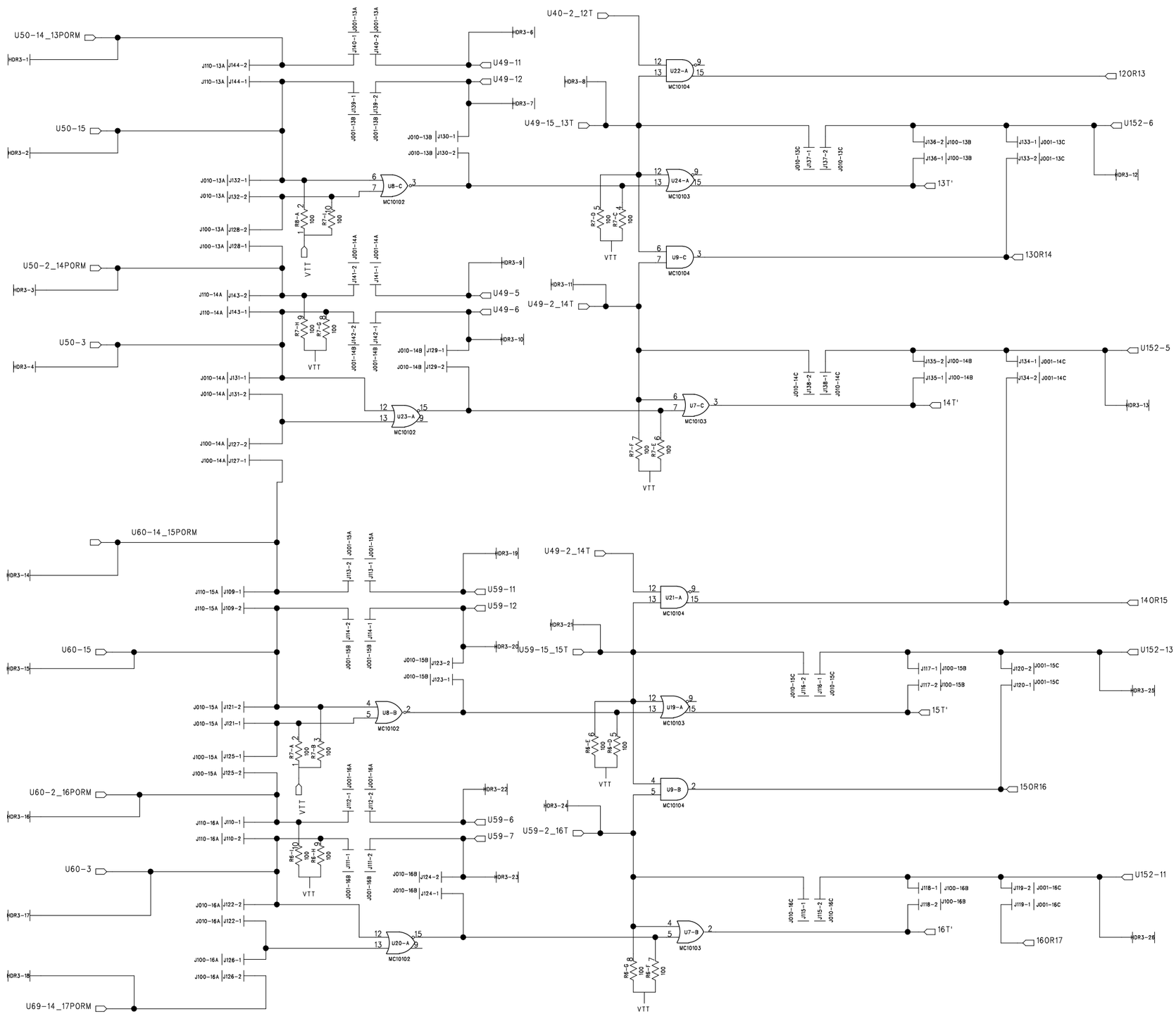

Notes:

Connector Signal and Power Distribution

Pin 1-39 Signals

HD1 - CH 1-6
HD2 - CH 7-12
HD3 - CH 13-18
HD4 - CH 19-24

Pin 40 - 50 Pwr and Gnd

GND = PINS 40-42, 46, 47
-5.2v = PINS 43-45
-2V = PINS 48-50

COMPANY: Brookhaven National Laboratory				
TITLE: MT2A Upgrade/Modification PCB Daughtercard				
DRAWN: H.S. Diaz	DATED: 6/12/2002	CODE:	SIZE:	DRAWING NO: MT2A-01 Channel 13 - 16
CHECKED:	DATED:			REV: Rev.0
QUALITY CONTROL:	DATED:			
RELEASED: PRELIMINARY	DATED:	SCALE:		SHEET:4 OF 7

REVISION RECORD			
LTR	ECO NO:	APPROVED	DATE:

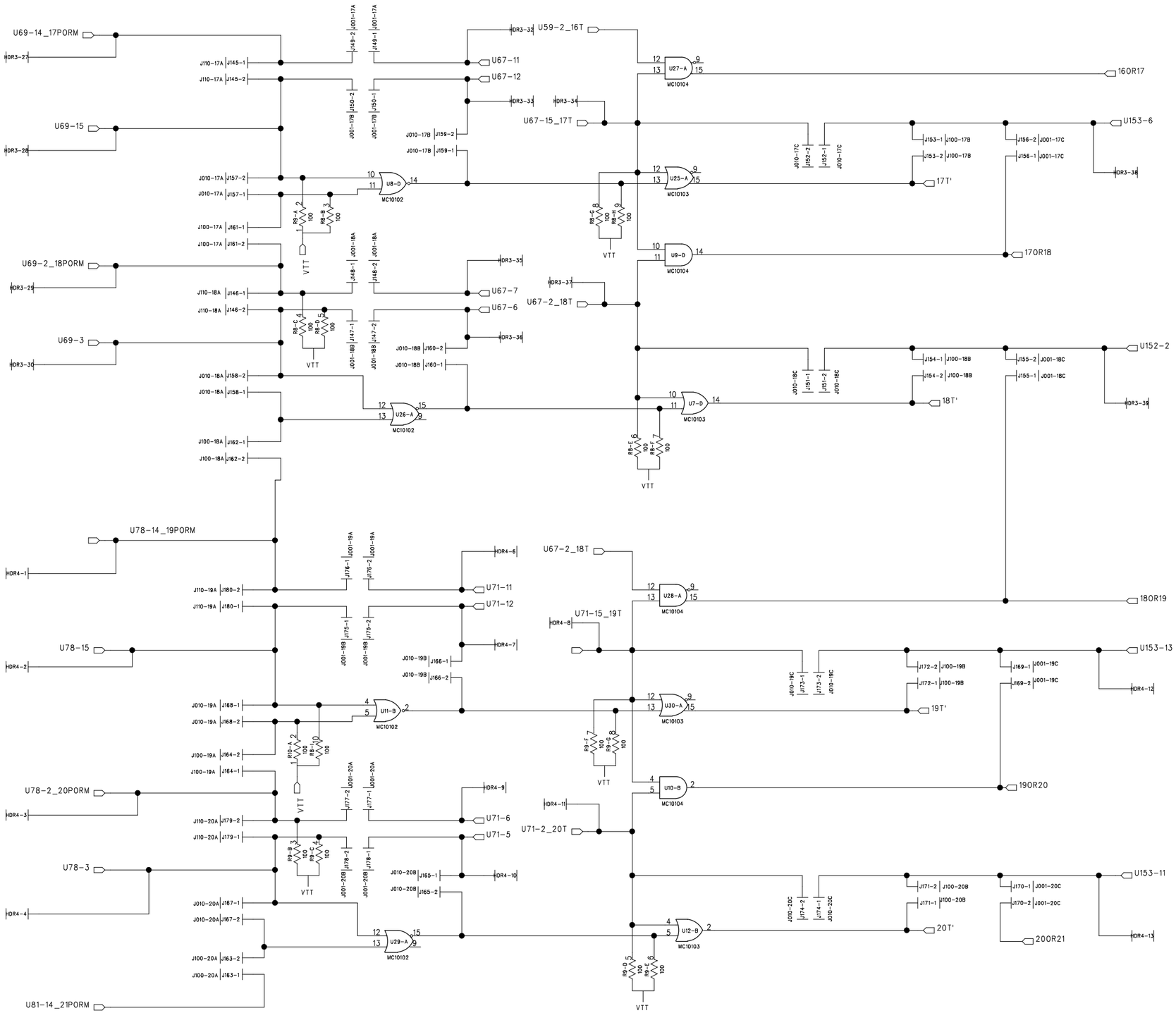

Notes:

Connector Signal and Power Distribution

Pin 1-39 Signals

HD1 - CH 1-6
HD2 - CH 7-12
HD3 - CH 13-18
HD4 - CH 19-24

Pin 40 - 50 Pwr and Gnd

GND = PINS 40-42, 46, 47
-5.2v = PINS 43-45
-2V = PINS 48-50

DRAWN: H.S. Diaz	DATED: 6/12/2002	COMPANY: Brookhaven National Laboratory		
CHECKED:	DATED:	TITLE: MT2A Upgrade/Modification PCB Daughtercard		
QUALITY CONTROL:	DATED:	CODE:	SIZE:	DRAWING NO: MT2A-01 Channel 17 - 20 — REV: Rev.0
RELEASED: PRELIMINARY	DATED:	SCALE:		SHEET: 5 OF 7

REVISION RECORD			
LTR	ECO NO:	APPROVED	DATE:

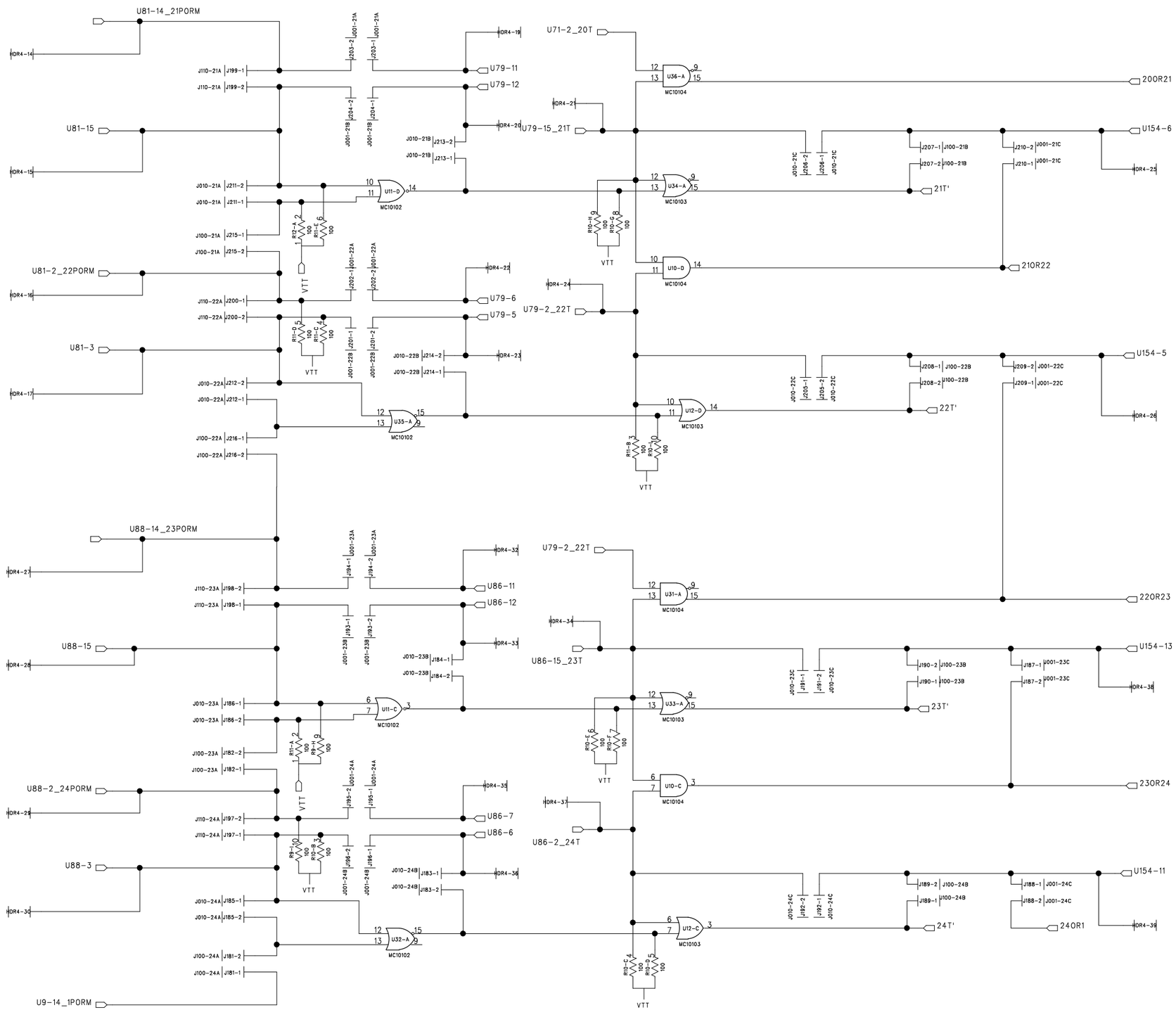

Notes:

Connector Signal and Power Distribution

Pin 1-39 Signals

HD1 - CH 1-6
HD2 - CH 7-12
HD3 - CH 13-18
HD4 - CH 19-24

Pin 40 - 50 Pwr and Gnd

GND = PINS 40-42, 46, 47
-5.2v = PINS 43-45
-2V = PINS 48-50

DRAWN: H.S. Diaz	DATED: 6/12/2002	COMPANY: Brookhaven National Laboratory		
CHECKED:	DATED:	TITLE: MT2A Upgrade/Modification PCB Daughtercard		
QUALITY CONTROL:	DATED:	CODE:	SIZE:	DRAWING NO: MT2A-01 Channel 21 - 24 — REV: Rev.0
RELEASED: PRELIMINARY	DATED:	SCALE:		SHEET: 6 OF 7

REVISION RECORD			
LTR	ECO NO:	APPROVED	DATE:

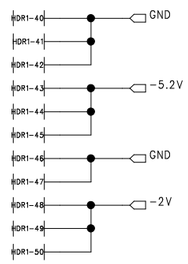

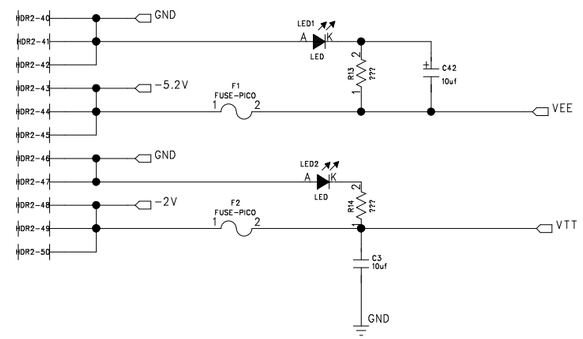

0.1uf local bypass capacitors placed near each IC.

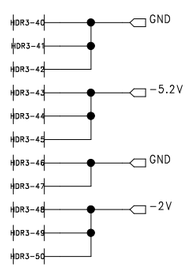

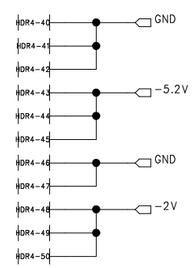

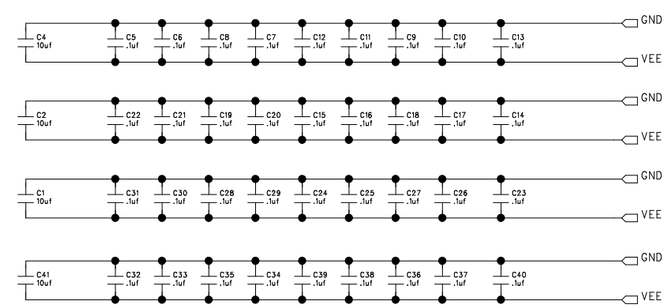

Notes:

Connector Signal and Power Distribution

Pin 1–39 Signals

HD1 – CH 1–6
HD2 – CH 7–12
HD3 – CH 13–18
HD4 – CH 19–24

Pin 40 – 50 Pwr and Gnd

GND = PINS 40–42, 46, 47
–5.2v = PINS 43–45
–2V = PINS 48–50

DRAWN: H.S. Diaz	DATED: 6/12/2002	COMPANY: Brookhaven National Laboratory	
CHECKED:	DATED:	TITLE: MT2A Upgrade/Modification PCB Daughtercard	
QUALITY CONTROL:	DATED:	CODE: / SIZE: / DRAWING NO: MT2A–01 Power Inputs/Filtering	REV: Rev.0
RELEASED: PRELIMINARY	DATED:	SCALE:	SHEET: 7 OF 7