REVISION RECORD			
LTR	ECO NO:	APPROVED:	DATE:

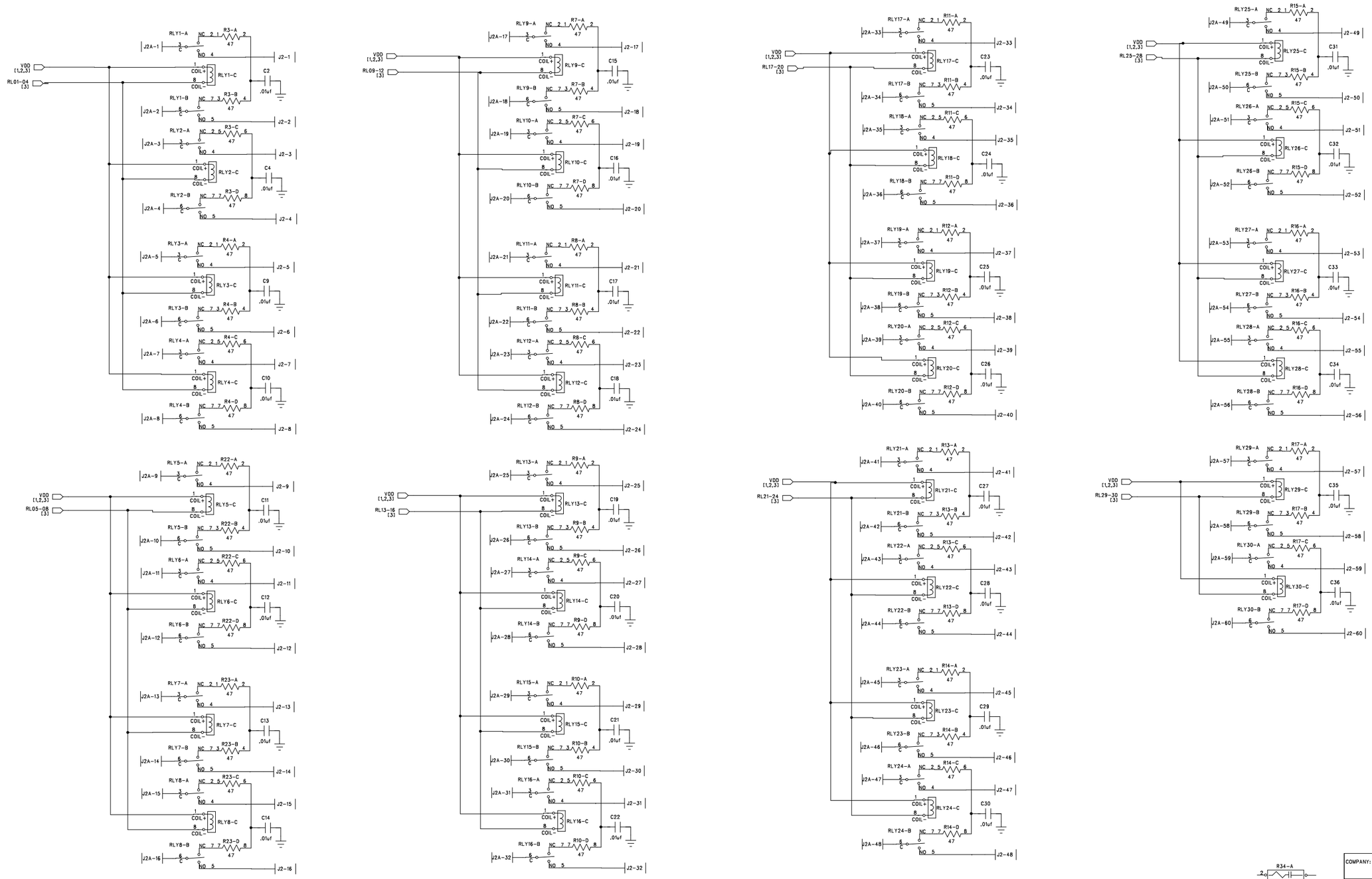

R34-A
RC_SIP5

COMPANY: Brookhaven National Laboratory			
TITLE: Cable Segment Switch Rev.D Part No. E949-CSS Rev. D J2 I/O connections			
DRAWN: A. Stillman	DATED: 02/01/03		
CHECKED: H. Diaz	DATED: 02/01/03	CODE:	SIZE: "D"
QUALITY CONTROL:	DATED:	DRAWING NO: Pads Logic Filename: Active Segment Terminator-Rev-D.sch	REV: "B"
RELEASED:	DATED:	SCALE: none	SHEET: 1 OF 3

REVISION RECORD			
LTR	ECO NO:	APPROVED:	DATE:

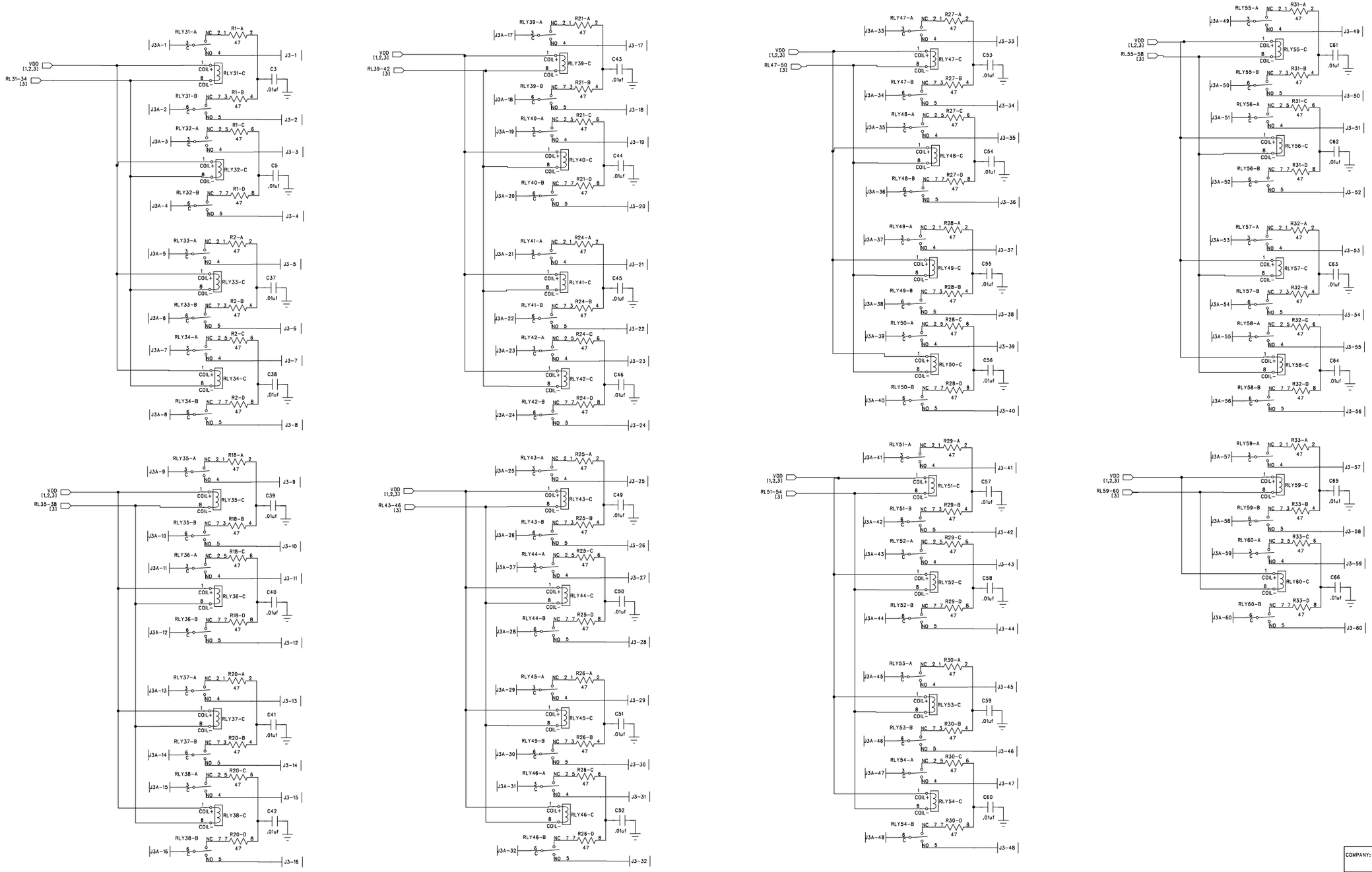

DRAWN: A. Stillman	DATED: 02/01/03	COMPANY: Brookhaven National Laboratory	
CHECKED: H. Diaz	DATED: 02/01/03	TITLE: Cable Segment Switch Rev.D Part No. E949-CSS Rev. D J3 I/O connections	
QUALITY CONTROL:	DATED:	CODE:	SIZE: "D"
RELEASED:	DATED:	DRAWING NO: Pads Logic Filename: Active Segment Terminator-Rev-D.sch	REV: "B"
		SCALE: none	SHEET: 2 OF 3

REVISION RECORD			
LTR	ECO NO:	APPROVED:	DATE:

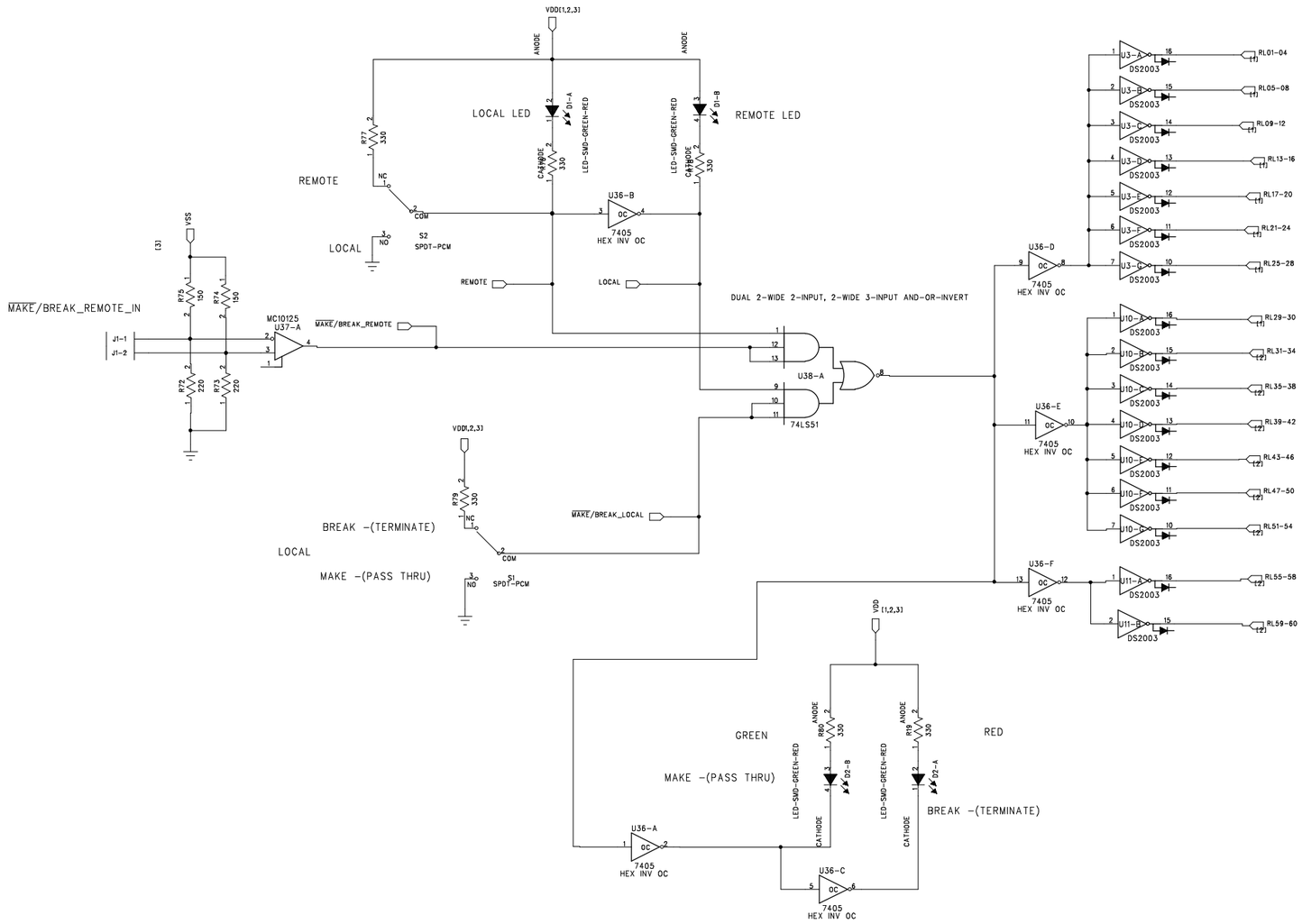

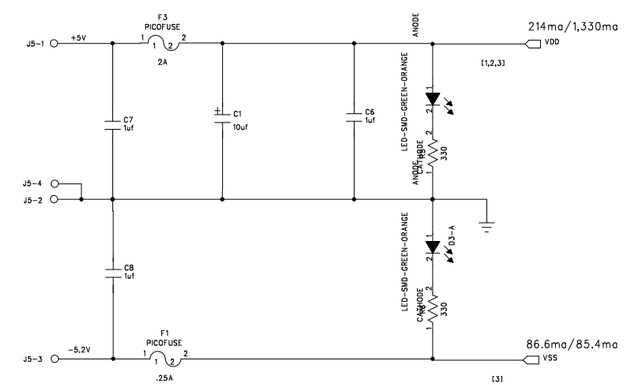

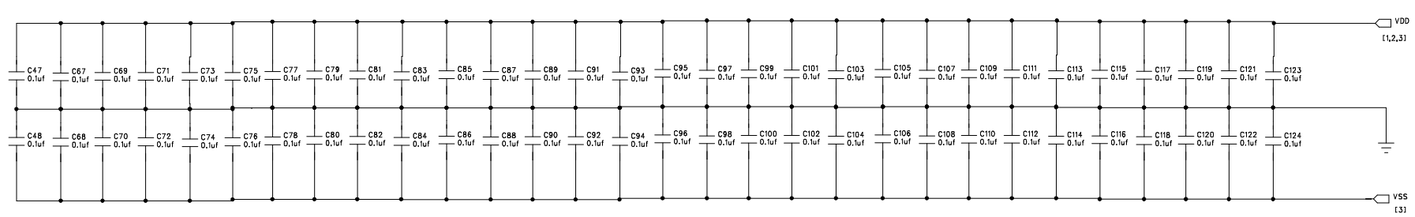

Power/Filters/Indicators

COMPANY: Brookhaven National Laboratory			
TITLE: Cable Segment Switch Rev.D Part No. E949-CSS Rev. D Switch Drivers and Power			
DRAWN: A. Stillman	DATED: 02/01/03	CODE:	SIZE: "D"
CHECKED: H. Diaz	DATED: 02/01/03	DRAWING NO: Pads Logic Filename: Active Segment Terminator-Rev-D.sch	REV: "B"
QUALITY CONTROL:	DATED:		
RELEASED:	DATED:	SCALE: none	SHEET: 3 OF 3