NOTES:
1. MATERIAL: DELRIN.
2. ALL DIMENSIONS ARE IN inches.
3. 2 REQ'D.

REVISION HISTORY			
REV	DESCRIPTION	DATE	APPROVED
A			

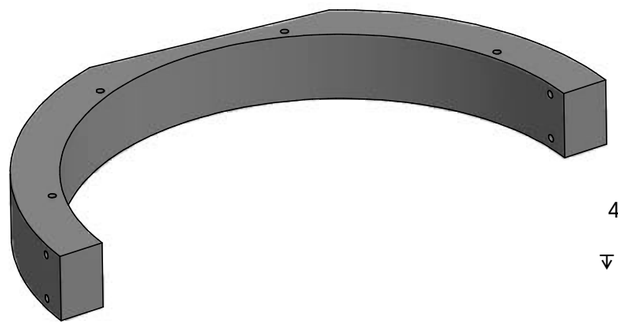

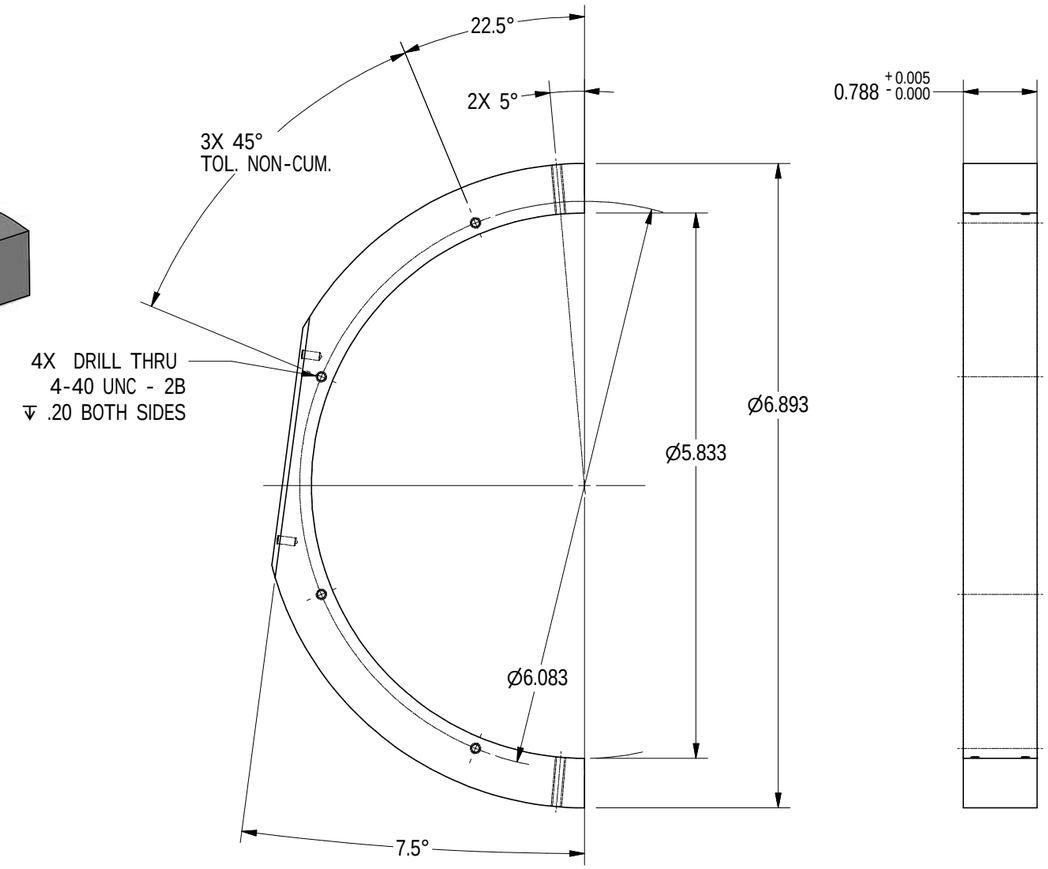

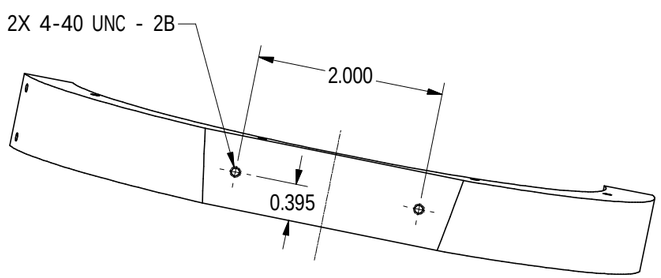

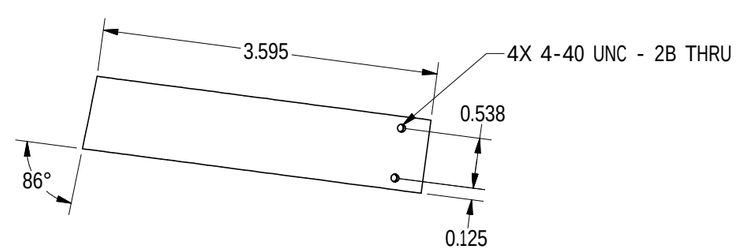

			REV
			SHEET
REVISION STATUS OF SHEETS			

THIRD ANGLE PROJECTION

NEXT ASSEMBLY

INTERPRET IN GENERAL ACCORDANCE WITH ASME Y14.5M-1994
UNLESS OTHERWISE SPECIFIED:
ALL DIMENSIONS ARE IN MILLIMETERS
DECIMAL TOLERANCES
X.X ± 0.06
X.XX ± 0.02
X.XXX ± 0.005
ANGLES ± 0.5

125 FINISH — BREAK EDGES: MAX. 0.015 MIN. 0.005

DRAWN BY:	RUGGIERO	1/24/2008
CHECKED BY:		1/24/2008
ENGINEER APPROVAL:		1/24/2008
Q.A. APPROVAL:		1/24/2008
SAFETY ENGINEER:		1/24/2008

BROOKHAVEN NATIONAL LABORATORY
Upton, NY 11973

PROJECT:
SYSTEM:
MODEL/DRAWING NAME: Non Metalic Breast Imaging Delrin Side Panel

SIZE: C — DRAWING NUMBER: BNM011 — REV: A

Q.A. CATEGORY: A3 — SCALE: — WEIGHT: — SHEET 1 OF 1