REVISION HISTORY			
REV	DESCRIPTION	DATE	APPROVED
A			

NOTES:
1. MATERIAL: DELRIN.
2. ALL DIMENSIONS ARE IN inches.

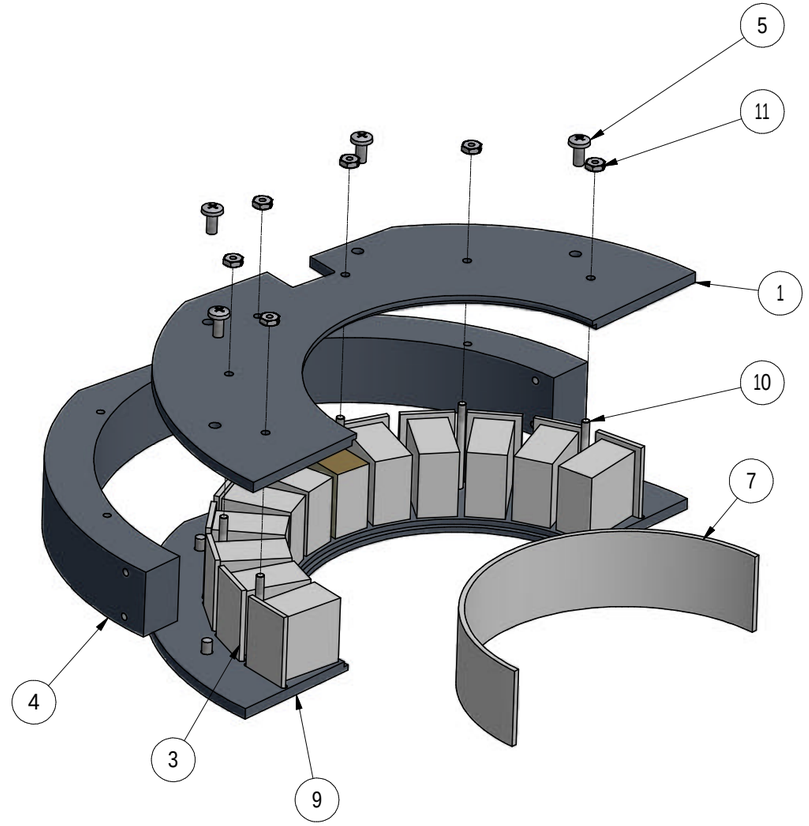

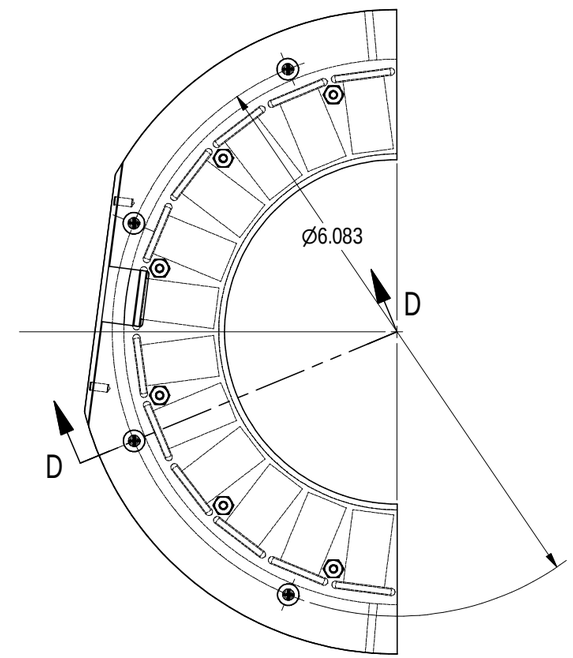

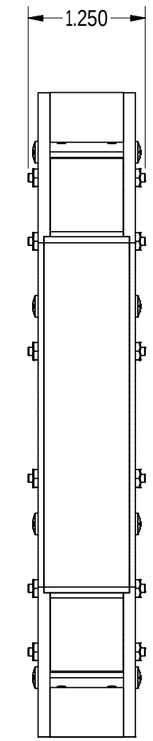

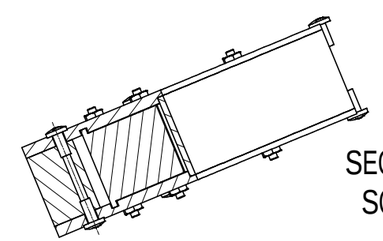

SECTION D-D
SCALE 1 : 1

Q	IT	PART NUMBER	DESCRIPTION
12	11	ASME B18.6.3 - 2-56	Chamfered Bottom Hex Machine Screw Nuts
6	10	2-56 stud	#2-56 Threaded Stud 1.25 LG
1	9	BNM010	Outer Skin Assembly
1	7	BNM012	Inner Radial Skin
8	5	ANSI B18.6.3 - No. 4 - 40 - 1/4	Cross Recessed Binding Head Machine Screw - Type I
1	4	BNM011	Delrin Side Panel
1	3	10-1184-1	Flex Circuit
1	1	BNM013	Outer Slotted Skin Assembly

BILL OF MATERIALS

			REV
			SHEET
REVISION STATUS OF SHEETS			

THIRD ANGLE PROJECTION

INTERPRET IN GENERAL ACCORDANCE WITH ASME Y14.5M-1994 UNLESS OTHERWISE SPECIFIED
ALL DIMENSIONS ARE IN MILLIMETERS
DECIMAL TOLERANCES
X.X ± 0.06
X.XX ± 0.02
X.XXX ± 0.005
ANGLES ± 0.5

125 FINISH — BREAK EDGES: MAX. 0.015 MIN. 0.005

NEXT ASSEMBLY

DRAWN BY:	RUGGIERO	1/24/2008
CHECKED BY:		1/24/2008
ENGINEER APPROVAL:		1/24/2008
Q.A. APPROVAL:		1/24/2008
SAFETY ENGINEER:		1/24/2008

BROOKHAVEN NATIONAL LABORATORY
Upton, NY 11973

PROJECT:
SYSTEM:
MODEL/DRAWING NAME:

Non-Metalic Breast Imaging Half Assy

SIZE: C | DRAWING NUMBER: BNM002 | REV: A

Q.A. CATEGORY: A3 | SCALE: | WEIGHT: | SHEET 1 OF 1