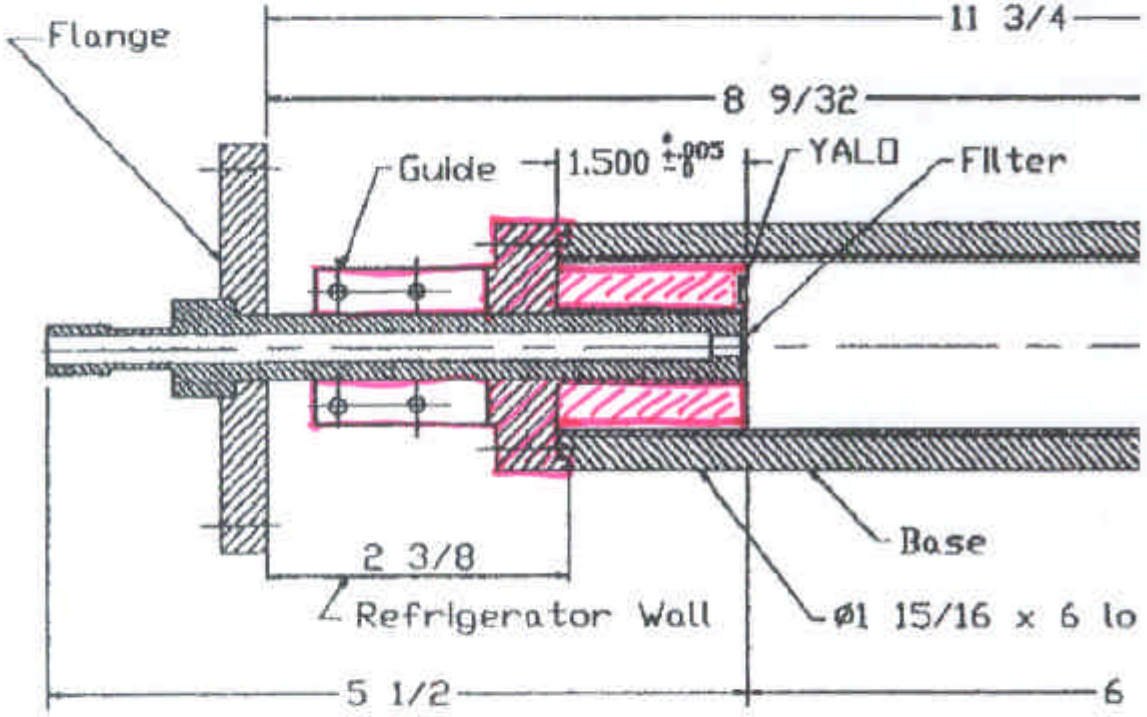

PMT positioned by "guide" part.

(in axis direction)

Thus distance between the bundle and PMT can be ~~kept~~ controlled directly.

NOTES:

1. All plastic parts are NORYL
2. All dimensions are in INCHES

* PMT face and end of MUmetal shield should position as shown.

REV	REVISIONS	BY	DATE	CHK	APP

4 3

ITEM NO.	QTY.	DESCRIPTION	MAT'L DWG. NO. OR SIM. NO.

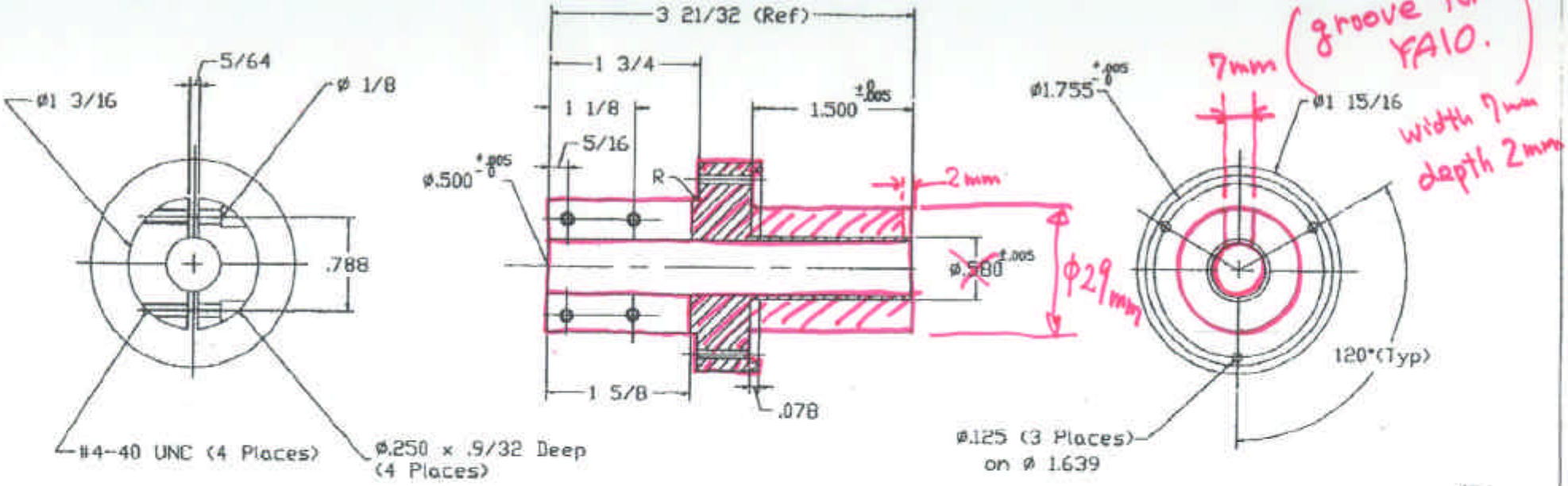

YA10 ø5.0 mm x 1.1 mm (H)

NOTES:

1. All dimensions are in INCHES
2. 14 units needed.

E.G.			
E. Garber		E. Garber	
J. Frank		K. U	

UNLESS OTHERWISE SPECIFIED DIMENSIONS AND TOLERANCES ARE IN INCHES

BROOKHAVEN NATIONAL LABORATORY
ASSOCIATED UNIVERSITIES, INC.
UPTON, N.Y. 11973

MONITORING SYSTEM
GUIDE

SHEET 1 of 1

4741 10/27/00 01:40P P.006

DRAFT: FOR REFERENCE ONLY

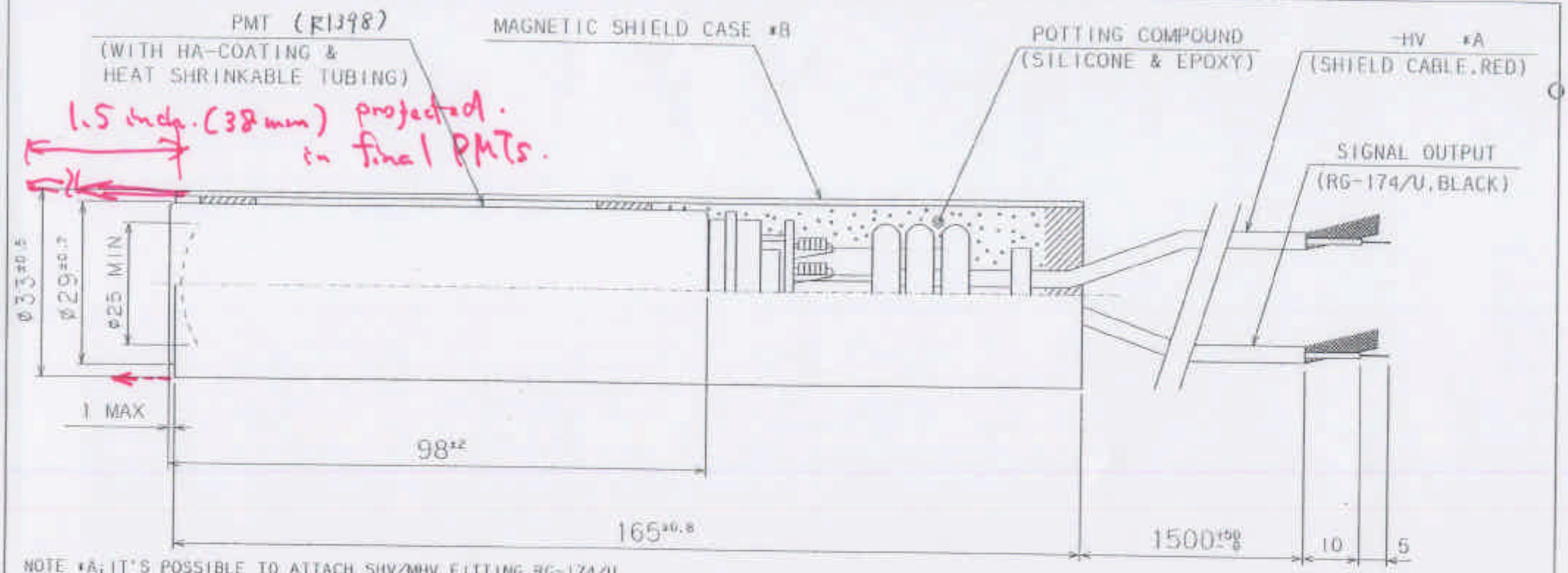

NOTE *A; IT'S POSSIBLE TO ATTACH SHV/MHV FITTING RG-174/U.

*B; IN VIEW OF MECHANISM, THIS PRODUCT IS DESIGNED FOR A WIDE USE, SO THAT DOES NOT ESPECIALLY ALLOW FOR EDGE EFFECT OF MAG SHIELD BEING SHOWN IN "PHOTOMULTIPLIER TUBE -PRINCIPLE TO APPLICATION-" PUBLISHED BY HAMAMATSU AND IN "ACCESSORIES FOR PHOTOMULTIPLIER TUBES CATALOG". IF EDGE EFFECT IS NECESSARY FOR YOU, PUT IN ADDITIONAL REQUEST, PLEASE.

UNIT : mm

	ITEM	NOTE	DATE	NAME	DIMENSIONAL OUTLINE H3171-03MOD(TAPER)		
APPROVED BY:				DRAWING NUMBER	SKETCH A	DATE	6 OCT 2000
CHECKED BY: K. Tomyama							
DRAWN BY: T. EMA	SCALE	1 / 1		HAMAMATSU PHOTONICS K.K.			